MITSUBISHI ELECTRIC

SPLIT-TYPE AIR CONDITIONERS

Changes for the Better

Mitsubishi Electric Quality

Wrap Yourself in Comfort and Quiet
Eco-conscious Technologies from Japan

Air Conditioner Catalogue 2021

Doing Our Part to Create a Better Future for All...

Core Environmental Policy

The Mitsubishi Electric Group promotes sustainable development and is committed to protecting and restoring the global environment through technology, through all its business activities, and through the actions of its employees.

Environmental Vision 2021

Making Positive Contributions to the Earth and its People through Technology and Action

Preventing Global Warming

- Reduce CO_2 emissions from product usage by 30%
- Reduce total CO_2 emissions from production by 30%
- Aim to reduce CO_2 emissions from power generation

Creating a Recycling-Based Society

- Reduce, reuse and recycle "3Rs" products reduce resources used by 30%
- Zero emissions from manufacturing reducing the direct landfill of waste to zero

Ensuring Harmony with Nature Fostering Environmental Awareness

The New Refrigerant R32

The new R32 refrigerant has a global warming potential approximately 1/3*1 that of our current refrigerant, R410A; thereby dramatically reducing the negative impact more than ever. Actively introducing the new R32 refrigerant to suppress global warming, Mitsubishi Electric continues to promote manufacturing while considering the environment.

Comparison of Global Warming Potential

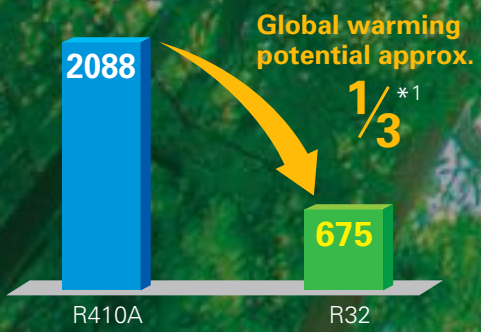

*1: Source: IPCC 4th Assessment Report, global warming potential (GWP) 100-year value. Comparison of 2088 (R410A) and 675 (R32).

Mitsubishi Electric reflects the essence of this policy and vision in all aspects of its air conditioner business as well.

Preventing Global Warming

Heat pump technology inspires Mitsubishi Electric to design air conditioners that harmonize comfort and ecology.

Heat Pump Principle (When Heating) <Case of COP 5.0>

Refrigerant and Heat Circulation

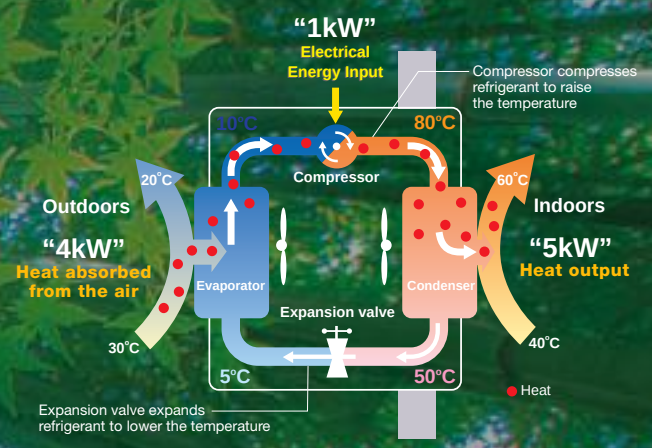

Mitsubishi Electric develops technologies to balance comfort and ecology, achieving greater efficiency in heat pump operation.

	Comfort	Ecology
1. Inverter	Faster start-up and more stable indoor temperature than non-inverter units.	Fewer On/Off operations than with non-inverter, saving energy.
2. 3D i-see Sensor	Since the positions of people can be detected, airflow can be set to personal taste, such as in airflow path or protected from the wind. The ability to adjust to individual preferences realizes more comfortable air conditioning.	Since the number of people in a room can be detected, energy-saving operation is adjusted or the power is turned off automatically. Efficient air conditioning with less waste is realized.
3. Flash Injection	Achieves high heating capacity even at low temperatures, plus faster start-up compared to conventional inverters.	Expands the region covered by heat pump heating system.

Creating a Recycling-Based Society

1. All models are designed for RoHS and WEEE compliance.*
2. Mitsubishi Electric develops downsizing technology to reduce materials use.

* WEEE and RoHS directives: The Waste Electrical and Electronic Equipment (WEEE) Directive is a recycling directive for this type of equipment, while the Restrictions of Hazardous Substances (RoHS) Directive is an EU directive restricting the use of six specified substances in electronic and electrical devices. In the EU, it is no longer possible (from July 2006) to sell products containing any of the six substances.

Ensuring Harmony with Nature / Fostering Environmental Awareness

In striving to heighten the eco-awareness of its employees, Mitsubishi Electric provides education in RoHS, WEEE and other environmental regulations, along with environmental education targeting second and third-year workers.

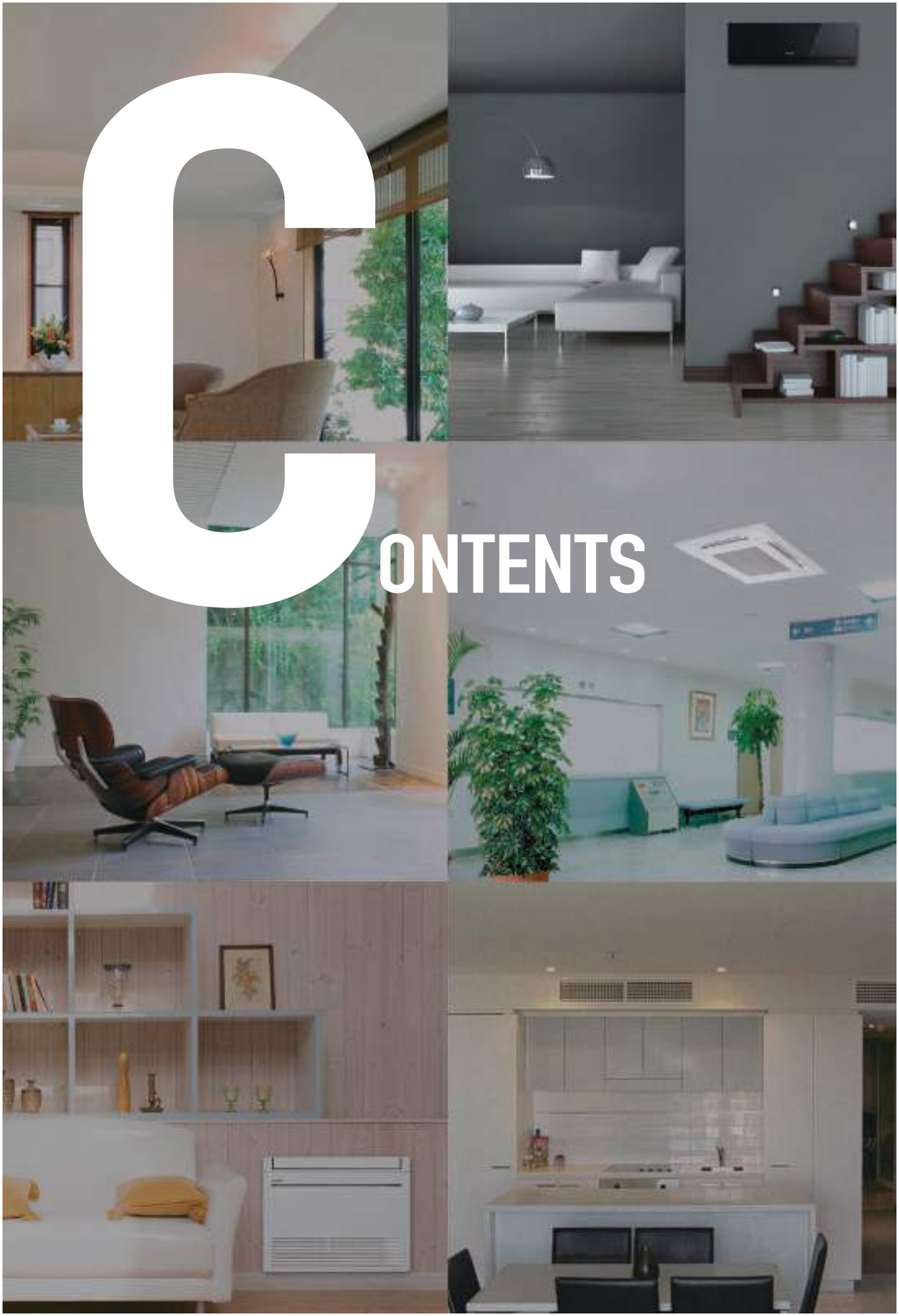

CONTENTS

Air Conditioners

LINE-UP 007-010

M SERIES 011-052

S SERIES 053-062

P SERIES 063-100

MULTI SPLIT SERIES 101-118

POWERFUL HEATING SERIES 119-138

Air Conditioners

NEW ECODESIGN DIRECTIVE 139-140

INVERTER TECHNOLOGIES 141-142

COMFORT 143-146

CONVENIENCE 147-148

INSTALLATION & MAINTENANCE 149-150

SYSTEM CONTROL 151-152

CONTROL TECHNOLOGIES 153-160

SYSTEM CONTROL 161-162

FUNCTION LIST 163-170

OPTIONAL PARTS 171-180

EXTERNAL DIMENSIONS 181-198

PIPING INSTALLATION 199-206

M/S/P/Multi

CONDITIONS FOR SPECIFICATION 207

HOW TO READ A MODEL NAME 207

REFRIGERANT AMOUNT 208

R32 REFRIGERANT 209-210

LOSSNAY

FEATURES & SPECIFICATIONS 211-245

HSB

LINE-UP

M SERIES

INVERTER Models

Model Name		1.5kW 1-phase	1.8kW 1-phase	2.0kW 1-phase	2.2kW 1-phase	2.5kW 1-phase	3.5kW 1-phase	4.2kW 1-phase	5.0kW 1-phase	6.0kW 1-phase	7.1kW 1-phase	Page
Wall-mounted	MSZ-L Series R32 R410A *2		W·V·R·B Multi connection only			W·V·R·B SINGLE	W·V·R·B SINGLE		W·V·R·B SINGLE	W·V·R·B SINGLE		13
	MSZ-A Series R32 R410A *1 MSZ-AP15/20VG	SINGLE		SINGLE								19
	MSZ-AP25/35/42/50VG MSZ-AP60/71VG					SINGLE H	SINGLE H	SINGLE H	SINGLE H	SINGLE	SINGLE	19
	MSZ-E Series R32 R410A *1		W·S·B Multi connection only		W·S·B Multi connection only	W·S·B SINGLE H	W·S·B SINGLE H	W·S·B SINGLE	W·S·B SINGLE			25
	MSZ-BT Series R32			SINGLE		SINGLE	SINGLE		SINGLE			27
	MSZ-HR Series R32 MSZ-HR25/35/42/50VF MSZ-HR60/71VF					SINGLE	SINGLE	SINGLE	SINGLE	SINGLE	SINGLE	29
	MSY-TP Series R32						SINGLE		SINGLE			31
	MSZ-S Series R410A MSZ-SF15/20VA	Multi connection only		Multi connection only								35
	MSZ-SF25/35/42/50VE3					SINGLE H	SINGLE H	SINGLE H	SINGLE H			35
	MSZ-G Series R410A									SINGLE	SINGLE	35
	MSZ-D Series R410A					SINGLE	SINGLE					41
	MSZ-H Series R410A MSZ-HJ25/35/50 MSZ-HJ60/71					SINGLE	SINGLE		SINGLE	SINGLE	SINGLE	43
Compact floor	MFZ Series R32					SINGLE	SINGLE		SINGLE	SINGLE		45
1-way cassette	MLZ Series R32					SINGLE	SINGLE		SINGLE			47

*1: R410A is for MXZ and PUMY connection.
*2: R410A is for PUMY connection.

H : Outdoor unit with freeze-prevention heater is available.
W·S·B: Indoor units are available in three colours; White, Black and Silver.
W·V·R·B: Indoor units are available in four colours; Natural White, Pearl White, Ruby Red, and Onyx Black.

Indoor Combinations

- SINGLE 1 outdoor unit & 1 indoor unit
- TWIN 1 outdoor unit & 2 indoor units
- TRIPLE 1 outdoor unit & 3 indoor units
- QUADRUPLE 1 outdoor unit & 4 indoor units

S SERIES

INVERTER Models

Model Name		1.5kW 1-phase	2.5kW 1-phase	3.5kW 1-phase	5.0kW 1-phase	6.0kW 1-phase	7.1kW 1-phase	10.0kW 1- & 3-phase	12.5kW 1- & 3-phase	14.0kW 1- & 3-phase	Page
2 x 2 cassette	SLZ Series R32 R410A	Multi connection only	SINGLE	SINGLE	SINGLE	SINGLE	TWIN	TWIN TRIPLE	TWIN TRIPLE QUADRUPLE	TRIPLE QUADRUPLE	55
Compact ceiling-concealed	SEZ Series R32 R410A		SINGLE *	SINGLE *	SINGLE *	SINGLE *	SINGLE *				60

* Indoor units are available in two types; with or without the wireless remote controller.

P SERIES

R32 Power Inverter Models / R32 Standard Inverter Models

Model Name		3.5kW 1-phase	5.0kW 1-phase	6.0kW 1-phase	7.1kW 1-phase	10.0kW 1- & 3-phase	12.5kW 1- & 3-phase	14.0kW 1- & 3-phase	20.0kW 1- & 3-phase	25.0kW 1- & 3-phase	Page
4-way cassette	PLA Series R32	SINGLE	SINGLE	SINGLE	SINGLE TWIN	SINGLE TWIN	SINGLE TWIN	SINGLE TWIN TRIPLE	TWIN TRIPLE QUADRUPLE	TWIN TRIPLE QUADRUPLE	67
Ceiling-concealed	PEAD Series R32	SINGLE	SINGLE	SINGLE	SINGLE TWIN	SINGLE TWIN	SINGLE TWIN	SINGLE TWIN TRIPLE	TWIN TRIPLE QUADRUPLE	TWIN TRIPLE QUADRUPLE	76
	PEA Series R32								SINGLE	SINGLE	81
Wall-mounted	PKA Series R32	SINGLE *	SINGLE *	SINGLE *	SINGLE * TWIN *	SINGLE TWIN	TWIN	TWIN TRIPLE	TWIN TRIPLE QUADRUPLE	TRIPLE QUADRUPLE	84
Ceiling-suspended	PCA-KA Series R32	SINGLE	SINGLE	SINGLE	SINGLE TWIN	SINGLE TWIN	SINGLE TWIN	SINGLE TWIN TRIPLE	TWIN TRIPLE QUADRUPLE	TWIN TRIPLE QUADRUPLE	89
for Professional Kitchen	PCA-HA Series * R32				SINGLE *			TWIN *		TRIPLE *	94

* R32 Power Inverter Model only

R410A POWER INVERTER Models / R410A STANDARD INVERTER Models

Model Name		3.5kW 1-phase	5.0kW 1-phase	6.0kW 1-phase	7.1kW 1-phase	10.0kW 1- & 3-phase	12.5kW 1- & 3-phase	14.0kW 1- & 3-phase	20.0kW 3-phase	25.0kW 3-phase	Page
4-way cassette	PLA Series R410A	SINGLE	SINGLE	SINGLE	SINGLE TWIN *	SINGLE TWIN	SINGLE TWIN	SINGLE TWIN TRIPLE	TWIN TRIPLE QUADRUPLE	TWIN TRIPLE QUADRUPLE	67
Ceiling-concealed	PEAD Series R410A	SINGLE	SINGLE	SINGLE	SINGLE TWIN *	SINGLE TWIN	SINGLE TWIN	SINGLE TWIN TRIPLE	TWIN TRIPLE QUADRUPLE	TWIN TRIPLE QUADRUPLE	76
	PEA Series R410A								SINGLE	SINGLE	81
Wall-mounted	PKA Series R410A	SINGLE *	SINGLE *	SINGLE *	SINGLE * TWIN *	SINGLE TWIN	TWIN	TWIN TRIPLE	TWIN TRIPLE QUADRUPLE	TRIPLE QUADRUPLE	84
Ceiling-suspended	PCA-KA Series R410A	SINGLE	SINGLE	SINGLE	SINGLE TWIN *	SINGLE TWIN	SINGLE TWIN	SINGLE TWIN TRIPLE	TWIN TRIPLE QUADRUPLE	TWIN TRIPLE QUADRUPLE	89
for Professional Kitchen	PCA-HA Series * R410A				SINGLE *			TWIN *		TRIPLE *	94
Floor-standing	PSA Series R410A				SINGLE *	SINGLE	SINGLE	SINGLE TWIN	TWIN	TWIN TRIPLE	97

* Power Inverter Models only

LINE-UP

MXZ SERIES INVERTER Models

Model Name		Capacity Class	Page
up to 2 indoor units MXZ-2F33VF3	R32	3.3kW <1-phase>	103
up to 2 indoor units MXZ-2F42VF3	R32	4.2kW <1-phase>	103
up to 2 indoor units MXZ-2F53VF(H)3	R32	5.3kW <1-phase>	103
up to 3 indoor units MXZ-3F54VF3	R32	5.4kW <1-phase>	103
up to 3 indoor units MXZ-3F68VF3	R32	6.8kW <1-phase>	103
up to 4 indoor units MXZ-4F72VF3	R32	7.2kW <1-phase>	103
up to 4 indoor units MXZ-4F80VF3	R32	8.0kW <1-phase>	103
up to 4 indoor units MXZ-4F83VF	R32	8.3kW <1-phase>	103
up to 5 indoor units MXZ-5F102VF	R32	10.2kW <1-phase>	103
up to 6 indoor units MXZ-6F122VF	R32	12.2kW <1-phase>	103
up to 2 indoor units MXZ-2HA40VF	R32	4.0kW <1-phase>	107
up to 2 indoor units MXZ-2HA50VF	R32	5.0kW <1-phase>	107
up to 3 indoor units MXZ-3HA50VF	R32	5.0kW <1-phase>	107

Model Name		Capacity Class	Page
up to 2 indoor units MXZ-2D33VA	R410A	3.3kW <1-phase>	105
up to 2 indoor units MXZ-2D42VA2	R410A	4.2kW <1-phase>	105
up to 2 indoor units MXZ-2D53VA (H)2	R410A	5.3kW <1-phase>	105
up to 3 indoor units MXZ-3E54VA	R410A	5.4kW <1-phase>	105
up to 3 indoor units MXZ-3E68VA	R410A	6.8kW <1-phase>	105
up to 4 indoor units MXZ-4E72VA	R410A	7.2kW <1-phase>	105
up to 4 indoor units MXZ-4E83VA	R410A	8.3kW <1-phase>	105
up to 5 indoor units MXZ-5E102VA	R410A	10.2kW <1-phase>	105
up to 6 indoor units MXZ-6D122VA	R410A	12.2kW <1-phase>	105
up to 2 indoor units MXZ-2DM40VA	R410A	4.0kW <1-phase>	109
up to 3 indoor units MXZ-3DM50VA	R410A	5.0kW <1-phase>	109

PUMY SERIES INVERTER Models

Model Name	12.5kW 1 & 3-phase	14.0kW 1 & 3-phase	15.5kW 1 & 3-phase	22.4kW 3-phase	Page
PUMY-SP R410A	✓	✓	✓		111
PUMY-P R410A	✓	✓	✓	✓	113

POWERFUL HEATING SERIES INVERTER Models

Model Name			2.5kW 1-phase	3.5kW 1-phase	5.0kW 1-phase	5.3kW 1-phase	8.3kW 1-phase	10.0kW 1- & 3-phase	12.5kW 3-phase	Page
Wall-mounted		MSZ-L VGHZ Series R32 R410A *	SINGLE H	SINGLE H	SINGLE H					121
Wall-mounted		MSZ-FT VGHZ Series R32	SINGLE H	SINGLE H	SINGLE H					123
Compact floor		MFZ VEHZ Series R410A	SINGLE H	SINGLE H	SINGLE H					127
ZUBADAN	4-way cassette	PLA Series R32 R410A						SINGLE TWIN	SINGLE TWIN	130
ZUBADAN	Ceiling-concealed	PEAD Series R32 R410A						SINGLE TWIN		132
ZUBADAN	Wall-mounted	PKA Series R32 R410A						SINGLE TWIN		133
Multi split		MXZ-F VFHZ Series MXZ-E VAHZ Series R32 R410A				2PORT H	4PORT H			134

* R410A is for PUMY connection.

H: Freeze-prevention heater is included as standard equipment.

Indoor Combinations

SINGLE 1 outdoor unit & 1 indoor unit
TWIN 1 outdoor unit & 2 indoor units
TRIPLE 1 outdoor unit & 3 indoor units
QUADRUPLE 1 outdoor unit & 4 indoor units

LOSSNAY SERIES

Centralized Ventilation						Decentralized Ventilation	
Ceiling Concealed Type					Vertical Type	Wall Mounted Type	
LGH-RVX Series	LGH-RVXT Series	GUF Series	GUG Series (Optional Unit)	VL-220CZGV-E	VL-CZPVU Series	VL-100(E)U5-E	VL-50(E)S2-E VL-50SR2-E

M SERIES

SELECTION

Choose the model that best matches room conditions.

SELECT SERIES

A multiple series line-up to choose from, each with various outstanding features. In addition to inverter-equipped models, constant-speed, floor-standing and cassette models can be selected. Choose the best series to match usage needs.

Wall-mounted Units

MSZ-L SERIES R32 R410A *2

25/35/50 SEER A+++ 25/35 SCOP A+++ 25/35 MXZ connection

MSZ-A SERIES R32 R410A *1

MSZ-AP60/71VG

MSZ-AP25-50VG

MSZ-AP15/20VG

20/25/35 SEER A+++ 25-60 SCOP A++ MXZ connection

MSZ-E SERIES R32 R410A *1

25/35 SEER A+++ 25/35 SCOP A++ MXZ connection

MSZ-BT SERIES R32

SEER A++ SCOP A+ MXZ connection

MSZ-HR SERIES R32 MSZ-HR60/71VF

MSZ-HR25-50VF

SEER A++ SCOP A+ MXZ connection

MSY-TP SERIES R32

35 SEER A+++

MSZ-S SERIES R410A

MSZ-SF25-50VE

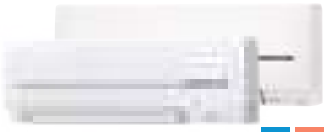

MSZ-SF15/20VA

SEER A++ SCOP A+ MXZ connection

MSZ-G SERIES R410A

SEER A++ SCOP A+ MXZ connection

MSZ-D SERIES R410A

SEER A+ SCOP A+ MXZ connection

MSZ-H SERIES R410A MSZ-HJ60/71

MSZ-HJ25/35/50

50/60/71 SEER A 50/60/71 SCOP A MXZ connection

SEER A SCOP A Energy Rank

MXZ connection Compatible for connection to MXZ Series system

R32 R32 Refrigerant

R410A R410A Refrigerant

*1 R410A is for MXZ and PUMY connection.
*2 R410A is for PUMY connection.

Floor-standing

MFZ SERIES R32

SEER A++ SCOP A+ MXZ connection

Cassette Units

MLZ SERIES R32

MXZ connection

SELECT OUTDOOR UNIT

Some outdoor units in the line-up have heaters for use in cold regions. Units with an "H" in the model name are equipped with heaters.

Heater Installed
MUZ-AP25/35/42/50VGH
MUZ-EF25/35VGH
MUZ-SF25/35/42/50VEH

MUZ-LN25/35VG

Hyper Heating
MUZ-LN25/35/50VGHZ
MUZ-FH25/35/50VEHZ
MUFZ-KJ25/35/50VEHZ

MUZ-LN50VG

Selecting a Heater-equipped Model

In regions with the following conditions, there is a possibility that water resulting from condensation on the outdoor unit when operating in the heating mode will freeze and not drain from the base.

1) Cold outdoor temperatures (temperature does not rise above 0°C all day)
2) Areas where dew forms easily (in the mountains, valleys(surrounded by mountains), near a forest, near unfrozen lakes, ponds, rivers or hot springs), or areas with snowfall.

To prevent water from freezing in the base, it is recommended that a unit with a built-in heater be purchased. Please ask your dealer representative about the best model for you.

MSZ-L SERIES

Single / MXZ, PUMY

R410A

PUMY

MSZ-LN18/25/35/50/60VG2

GOOD DESIGN AWARD 2016
BEST 100

Developed to complement modern interior room décor, the LN Series is available in four colours specially chosen to blend in naturally wherever installed. Not only the sophisticated design, but also the optimum energy efficiency and operational comfort add even more value to this series.

Luminous and Luxurious Design

Natural White, Pearl White, Ruby Red, and Onyx Black. LN Series indoor units are available in four colours to match various lifestyles. The appearance of the indoor unit differs depending on the lighting in the room, attracting the attention of everyone that enters the room.

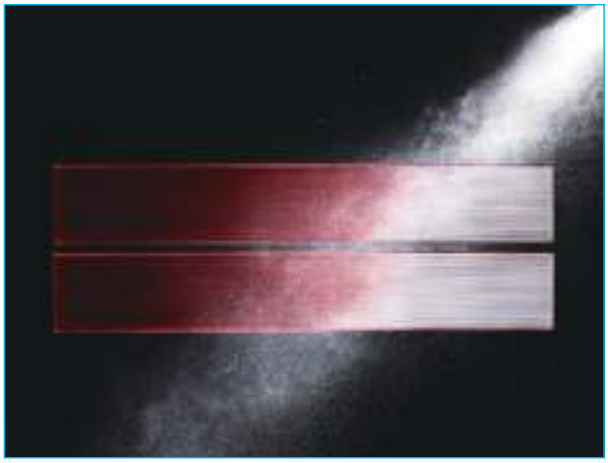

Master craftsmanship painting technology has resulted in a refined design, giving the finish deep colour and a premium quality feel.

Pearl White blends in with any interior.

Ruby Red gives an accent to the room, affording timeless elegance to sophisticated interiors.

Onyx Black matches darker interiors, creating a comfortable environment.

LED Backlight Remote Controller

Not only the indoor units, but the wireless remote controllers come in four colours as well. Each remote controller matches the indoor unit. Even the textures are the same.

The setting can be easily checked in the dark.

Pearl White | Ruby Red | Onyx Black | Natural White

High Energy Efficiency

DC Inverter 25/35/50 SEER A+++ 25/35 SCOP A+++

Optimum cooling/heating performance is another feature for the LN series. Models from capacities 25 to 50 have achieved the "Rank A+++" for SEER, and models for capacities 25 and 35 have achieved the "Rank A+++" for SCOP as well.

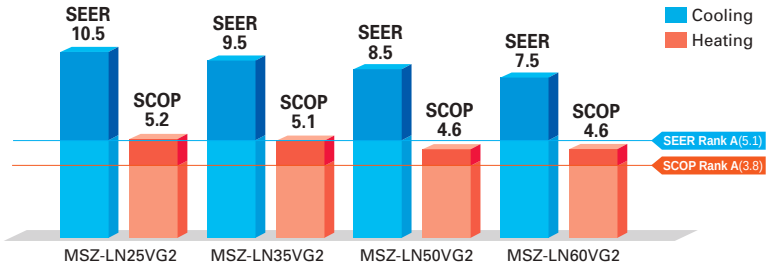

3D i-see Sensor

The LN Series is equipped with 3D i-see Sensor, an infrared-ray sensor that measures the temperature at distant positions. While moving to the left and right, eight vertically arranged sensor elements analyze the room temperature in three dimensions. This detailed analysis makes it possible to judge where people are in the room, thus allowing creation of features such as "Indirect airflow," to avoid airflow hitting people directly, and "direct airflow" to deliver airflow to where people are.

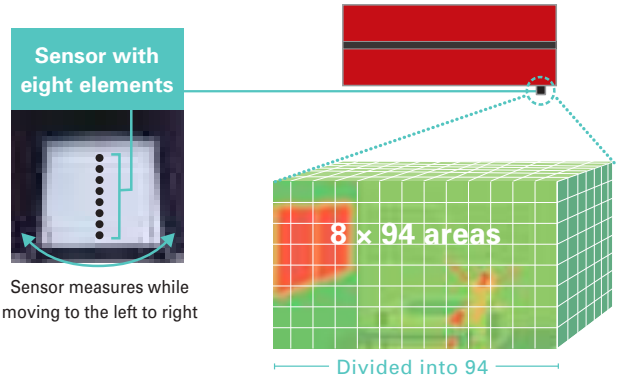

(Image)

Indirect Airflow

The indirect airflow setting can be used when the flow of air feels too strong or direct. For example, it can be used during cooling to avert airflow and prevent body temperature from becoming excessively cooled.

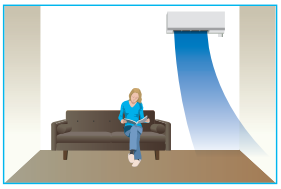

Direct Airflow

This setting can be used to directly target airflow at people such as for immediate comfort when coming indoors on a hot (cold) day.

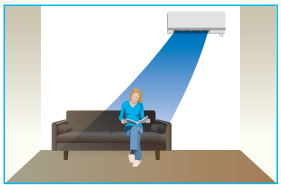

Even Airflow *LN Series only

Normal swing mode

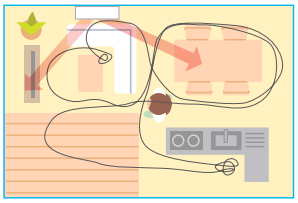

The airflow is distributed equally throughout the room, even to spaces where there is no human movement.

Even airflow mode

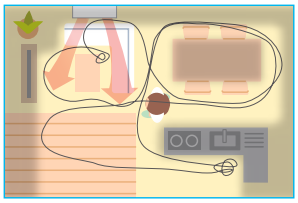

The 3D i-see sensor memorizes human movement and furniture positions, and efficiently distributes airflow.

No occupancy energy-saving mode

The sensors detect whether there are people in the room. When no-one is in the room, the unit automatically switches to energy-saving mode.

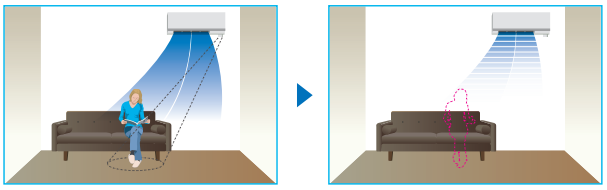

The "3D i-see Sensor" detects people's absence and the power consumption is automatically reduced approximately 10% after 10 minutes and 20% after 60 minutes.

No occupany Auto-OFF mode *LN Series only

The sensors detect whether or not there are people in the room. When there is no one in the room, the unit turns off automatically.

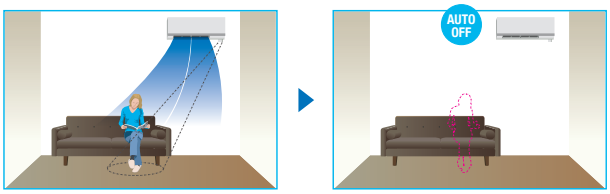

Circulator Operation

(MSZ-LN18/25/35/50/60VG-SC Scandinavian model)

In case the indoor temperature reaches the setting temperature, the outdoor unit stops and the indoor unit starts FAN operation to circulate the indoor air.
The outdoor unit starts operation automatically when the indoor temperature drops below the setting temperature.

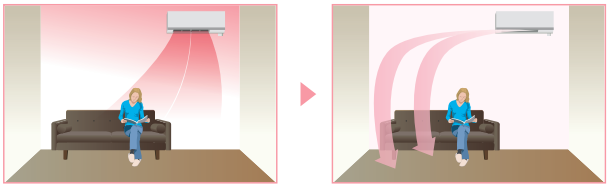

If the heating operation is continued, the warm air is formed around ceiling.

This operating can help to circulate and rense warm air.

Plasma Quad Plus

Plasma Quad Plus is a plasma-based filter system that effectively removes six kinds of air pollutants. Plasma Quad Plus captures mold and allergens more effectively than Plasma Quad. It can also capture PM2.5 and particles smaller than 2.5μm, creating healthy living spaces for all.

Bacteria

Test results have confirmed that Plasma Quad Plus neutralizes 99% of bacteria in 162 minutes in a 25m^3 test space.

<Test No.> KRCES-Bio. Test Report No. 2016-0118

Viruses

Test results have confirmed that Plasma Quad Plus neutralizes 99% of virus particles in 72 minutes in a 25m^3 test space.

<Test No.> vrc.center, SMC No. 28-002

Molds

Test results have confirmed that Plasma Quad Plus neutralizes 99% of mold in 135 minutes in a 25m^3 test space.

<Test No.> Japan Food Research Laboratories Test Report No. 16069353001-0201

Allergens

In a test, air containing cat fur and pollen was passed through the air cleaning device at the low airflow setting. Before and after measurements confirm that Plasma Quad Plus neutralizes 98% of cat fur and pollen.

<Test No.> ITEA Report No. T1606028

PM2.5

Test results have confirmed that Plasma Quad Plus removes 99% of PM2.5 in 145 minutes in a 28m^3 test space.

<In-company investigation>

Dust

Test results have confirmed that Plasma Quad Plus removes 99.7% of dust and mites.

<Test No.> ITEA Report No. T1606028

Model	Name	Method	Bacteria	Viruses	Molds	Allergens	Dust	PM2.5*
FH Series	Plasma Quad	One-Stage Plasma	A	A	B	B	C	
LN Series	Plasma Quad Plus	Two-Stage Plasma	A	A	A	A	A	A

A: Highly effective
B: Effective
C: Partially effective

*PM2.5:
Particles smaller than 2.5μm

Image of Plasma Quad Plus

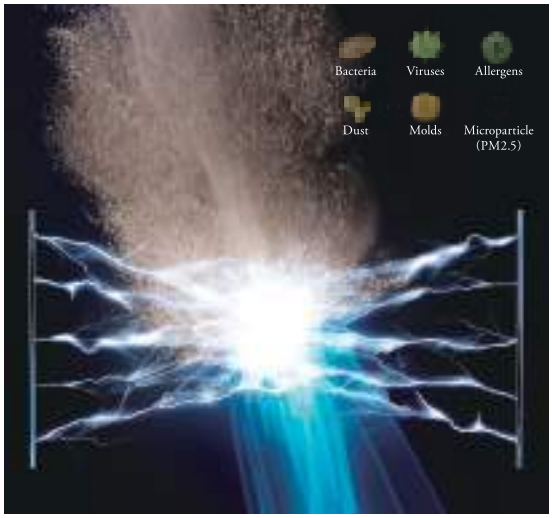

Principle of Plasma Quad Plus

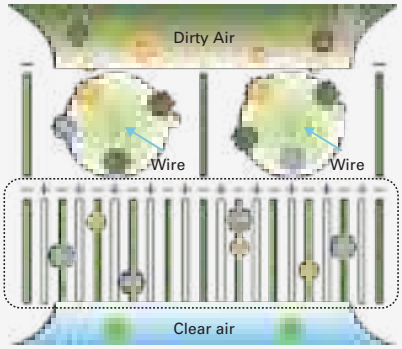

Dust, PM2.5
Viruses
Bacteria
Mold
Allergens

1st stage

- Make plasma.
- Break mold and allergens. Inhibit viruses.
- Dust and PM2.5 given an electrical charge (+).

2nd stage

- Make a strong electrical field.
- The charged dust and PM2.5 (+) are absorbed in the strong electrical field (–).

Dual Barrier Coating

A two-barrier coating prevents dust and greasy dirt from getting into the air conditioner.

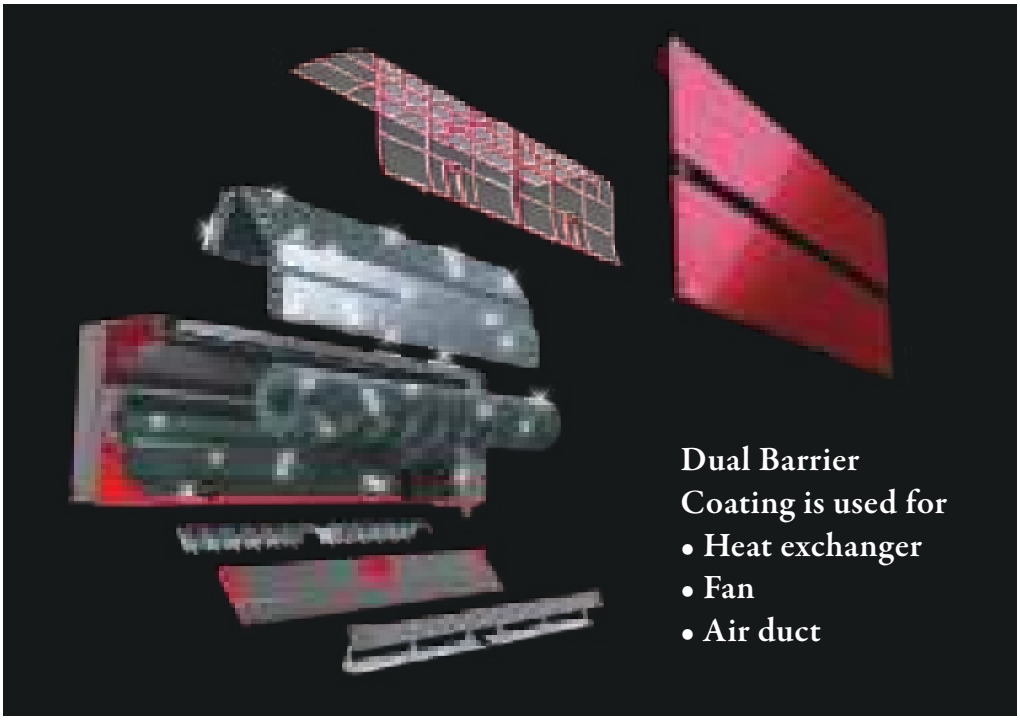

State-of-the-art coating technology

Dirt is generally classified into two groups: hydrophilic dirt such as fiber dust and sand dust, and hydrophobic dirt such as oil and cigarette smoke. Mitsubishi Electric's dual barrier coating works as a two-barrier coating with blended "fluorine particles" that prevent hydrophilic dirt penetration and "hydrophilic particles" that prevent hydrophobic dirt from getting into the air conditioner. This dual coating on the inner surface keeps the air conditioner clean year-round.

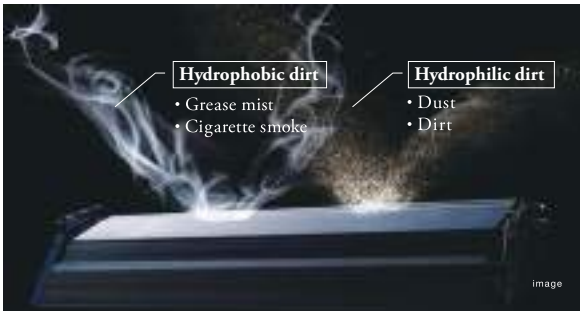

Comparison of dirt on heat exchanger, fan and air duct (in-house comparison)

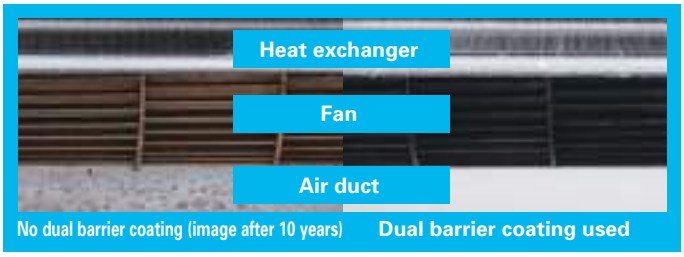

The inside of the indoor unit gets dirty after many years of usage.

Heat exchanger

New

10 years later (image)

Fan

New

10 years later (image)

Consequences when the inside of the indoor unit is left dirty.

- Deterioration in energy efficiency.
- Musty smell from the unit.

Double Flap

The vanes create various airflows to make each person in the room comfortable. Not only the horizontal vanes, but also the vertical vanes move independently, eliminating hot spots or cold spots throughout the room.

Night Mode

When Night Mode is activated using the wireless remote controller, air conditioner operation will switch to the following settings.

- The brightness of the operation indicator lamp will become dimmer.
- The beeping sound will be disabled.
- The outdoor operating noise will drop to 3dB lower than the rated operating noise specification.

*The cooling/heating capacity may drop.

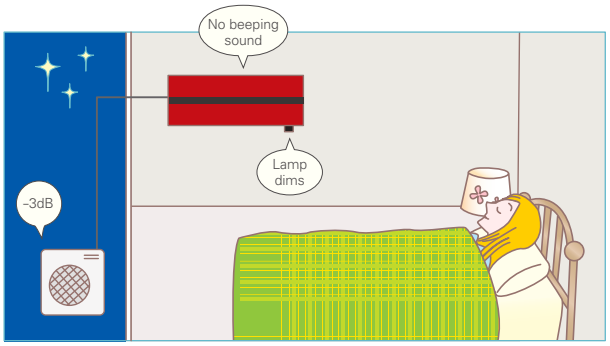

10°C Heating

During heating operation, the temperature can be set in 1°C increments down to 10°C.
This function can also be used with the Weekly Timer setting.

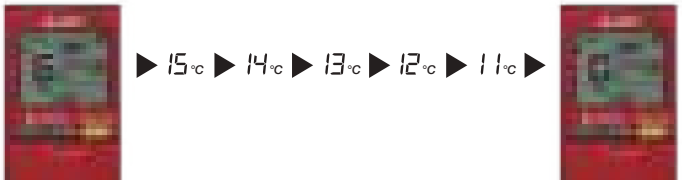

Quiet Operation

The indoor unit noise level is as low as 19dB for LN25/35 models, offering a peaceful inside environment.

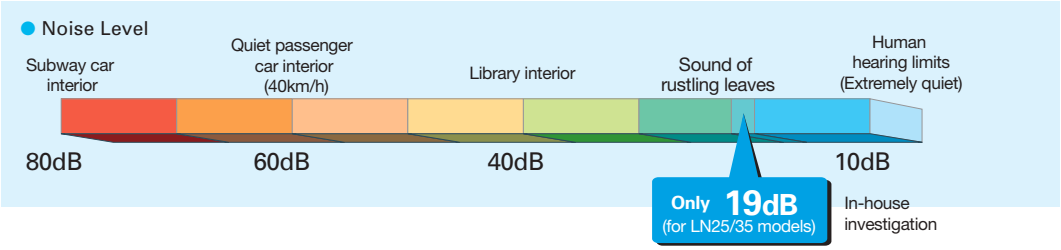

Built-in Wi-Fi Interface

The indoor unit is equipped with a Wi-Fi Interface inside an exclusive pocket in the unit.
This eliminates the need to install a Wi-Fi interface, and also contributes to the beautiful appearance since the interface is hidden.

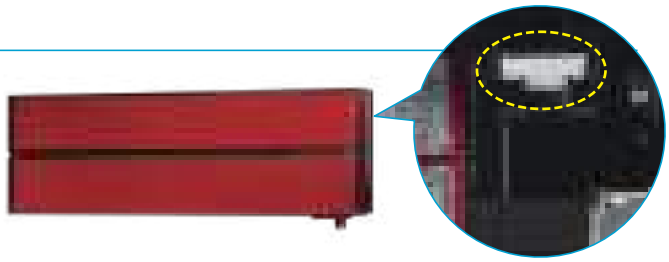

MSZ-L SERIES

DC Inverter | Joint Lap | DC Fan Motor | PAM | Grooved Piping | 25 / 35 / 50 SEER A+++ | 25 / 35 SCOP A+++

Indoor Unit / Remote Controller

PUMY R410A

GOOD DESIGN AWARD 2016 BEST 100

<Pearl White>

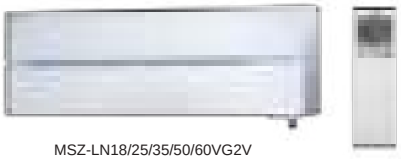

MSZ-LN18/25/35/50/60VG2V

<Ruby Red>

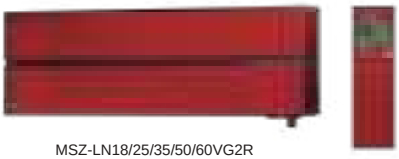

MSZ-LN18/25/35/50/60VG2R

<Natural White>

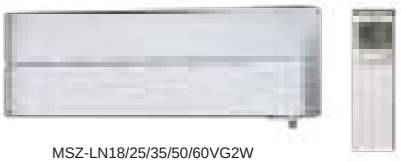

MSZ-LN18/25/35/50/60VG2W

<Onyx Black>

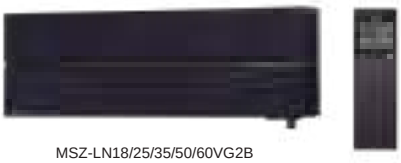

MSZ-LN18/25/35/50/60VG2B

Outdoor Unit

MUZ-LN25/35VG2

MUZ-LN50VG2

MUZ-LN60VG

3D i-see Sensor | AREA | HUMAN | Econo Cool | AUTO VANE | Plasma Quad Plus | Dual Barrier Coating | Double Vane | SWING | SWING | AUTO | Weekly Timer | i save | ACO | Auto Restart

Low Temp Cooling | Optional | Group Control | Optional | M-NET connection | Optional | Wi-Fi Interface | MXZ connection 18 / 25 / 35 / 50 | 10°C | Indoor | Night | Back Light Remote | Cleaning-free pipe reuse | Flare connection | Self Diagnosis | Failure Recall

Type				Inverter Heat Pump				
Indoor Unit				MSZ-LN18VG2	MSZ-LN25VG2	MSZ-LN35VG2	MSZ-LN50VG2	MSZ-LN60VG2
Outdoor Unit				for MXZ connection	MUZ-LN25VG2	MUZ-LN35VG2	MUZ-LN50VG2	MUZ-LN60VG
Refrigerant				Single: R32(*1) / Multi: R410A or R32(*1)				
Power Supply	Source			Outdoor Power Supply				
	Outdoor (V / Phase / Hz)			230 / Single / 50				
Cooling	Design load		kW	–	2.5	3.5	5.0	6.1
	Annual electricity consumption (*2)		kWh/a	–	83	129	205	285
	SEER (*4)			–	10.5	9.5	8.5	7.5
		Energy efficiency class		–	A+++	A+++	A+++	A++
	Capacity	Rated	kW	–	2.5	3.5	5.0	6.1
		Min-Max	kW	–	1.0 - 3.5	0.8 - 4.0	1.0 - 6.0	1.4 - 6.9
	Total Input	Rated	kW	–	0.485	0.820	1.380	1.790
Heating (Average Season)(*5)	Design load		kW	–	3.0 (-10ºC)	3.6 (-10ºC)	4.5 (-10ºC)	6.0 (-10ºC)
	Declared Capacity	at reference design temperature	kW	–	3.0 (-10ºC)	3.6 (-10ºC)	4.5 (-10ºC)	6.0 (-10ºC)
		at bivalent temperature	kW	–	3.0 (-10ºC)	3.6 (-10ºC)	4.5 (-10ºC)	6.0 (-10ºC)
		at operation limit temperature	kW	–	2.5 (-15ºC)	3.2 (-15ºC)	4.2 (-15ºC)	6.0 (-15ºC)
	Back up heating capacity		kW	–	0.0 (-10ºC)	0.0 (-10ºC)	0.0 (-10ºC)	0.0 (-10ºC)
	Annual electricity consumption (*2)		kWh/a	–	807	987	1369	1826
	SCOP (*4)			–	5.2	5.1	4.6	4.6
		Energy efficiency class		–	A+++	A+++	A++	A++
	Capacity	Rated	kW	–	3.2	4.0	6.0	6.8
		Min-Max	kW	–	0.7 - 5.4	0.9 - 6.3	1.0 - 8.2	1.8 - 9.3
	Total Input	Rated	kW	–	0.600	0.820	1.480	1.810
Operating Current (Max)			A	–	7.1	9.9	13.9	15.2
Indoor Unit	Input	Rated	kW	0.027	0.027	0.027	0.034	0.040
	Operating Current(Max)		A	0.3	0.3	0.3	0.4	0.4
	Dimensions	H*W*D	mm	307-890-233	307-890-233	307-890-233	307-890-233	307-890-233
	Weight		kg	14.5 (W) 15.5 (V, R, B)	14.5 (W) 15.5 (V, R, B)	14.5 (W) 15.5 (V, R, B)	15 (W) 16 (V, R, B)	15 (W) 16 (V, R, B)
	Air Volume (SLo-Lo-Mid-Hi-SHi(*3))(Dry/Wet))	Cooling	m^3/min	4.7 - 5.9 - 7.1 - 9.2 - 12.4	4.7 - 5.9 - 7.1 - 9.2 - 12.4	4.7 - 5.9 - 7.1 - 9.2 - 13.0	5.7 - 7.6 - 8.8 - 10.6 - 13.9	7.1 - 8.8 - 10.6 - 12.7 - 15.7
		Heating	m^3/min	4.5 - 6.6 - 7.5 - 11.0 - 13.9	4.5 - 6.6 - 7.5 - 11.0 - 13.9	4.5 - 6.6 - 7.5 - 11.0 - 13.9	5.4 - 6.4 - 8.5 - 10.7 - 15.7	6.6 - 9.5 - 11.5 - 13.6 - 15.7
	Sound Level (SPL) (SLo-Lo-Mid-Hi-SHi(*3))	Cooling	dB(A)	19 - 23 - 29 - 36 - 42	19 - 23 - 29 - 36 - 42	19 - 24 - 29 - 36 - 43	27 - 31 - 35 - 39 - 46	29 - 37 - 41 - 45 - 49
		Heating	dB(A)	19 - 24 - 29 - 38 - 45	19 - 24 - 29 - 38 - 45	19 - 24 - 29 - 38 - 45	25 - 29 - 34 - 39 - 47	29 - 37 - 41 - 45 - 49
	Sound Level (PWL)	Cooling	dB(A)	58	58	59	60	65
Outdoor Unit	Dimensions	H*W*D	mm	–	550-800-285	550-800-285	714-800-285	880-840-330
	Weight		kg	–	33	34	40	55
	Air Volume	Cooling	m^3/min	–	34.3	34.3	40.0	50.1
		Heating	m^3/min	–	32.7	32.7	40.5	51.3
	Sound Level (SPL)	Cooling	dB(A)	–	46	49	51	55
		Heating	dB(A)	–	49	50	54	55
	Sound Level (PWL)	Cooling	dB(A)	–	60	61	64	65
	Operating Current (Max)		A	–	6.8	9.6	13.5	14.8
	Breaker Size		A	–	10	10	16	16
Ext. Piping	Diameter	Liquid/Gas	mm	–	6.35/9.52	6.35/9.52	6.35/9.52	6.35/12.7
	Max.Length	Out-In	m	–	20	20	30	30
	Max.Height	Out-In	m	–	12	12	12	15
Guaranteed Operating Range (Outdoor)		Cooling	℃	–	-10 ~ +46	-10 ~ +46	-10 ~ +46	-10 ~ +46
		Heating	℃	–	-15 ~ +24	-15 ~ +24	-15 ~ +24	-15 ~ +24

(*1) Refrigerant leakage contributes to climate change. Refrigerant with lower global warming potential (GWP) would contribute less to global warming than a refrigerant with higher GWP, if leaked to the atmosphere. This appliance contains a refrigerant fluid with a GWP equal to 550. This means that if 1 kg of this refrigerant fluid would be leaked to the atmosphere, the impact on global warming would be 550 times higher than 1 kg of CO_2, over a period of 100 years. Never try to interfere with the refrigerant circuit yourself or disassemble the product yourself and always ask a professional.
The GWP of R32 is 675 in the IPCC 4th Assessment Report.
(*2) Energy consumption based on standard test results. Actual energy consumption will depend on how the appliance is used and where it is located.
(*3) SHi: Super High
(*4) SEER, SCOP and other related description are based on COMMISSION DELEGATED REGULATION (EU) No.626/2011. The temperature conditions for calculating SCOP are based on "Average Season".
(*5) Please see page 51-52 for heating (warmer season) specifications.

MSZ-A SERIES

Introducing a compact and stylish indoor unit with various capacity, designed to match number of rooms. High performance indoor and outdoor units enabled to achieve "Rank A+++" for SEER. *MSZ-AP20/25/35VG

Single / Multi

R410A

Multi

MSZ-AP15/20VG

MSZ-AP25/35/42/50VG

MSZ-AP60/71VG

GOOD DESIGN AWARD 2017

reddot award 2018 winner

High energy saving

20/25/35 SEER A+++ | 25-60 SCOP A++

The classes from the low-capacity 25 to the high-capacity 60, have achieved either the "Rank A+++" or "Rank A++" for SEER and SCOP as energy-savings rating. Our air conditioners are contributing to reduce energy consumption in a wide range.

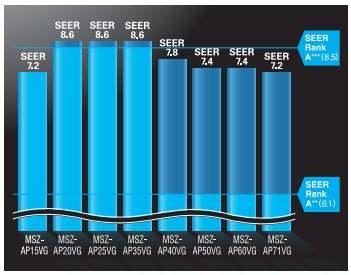

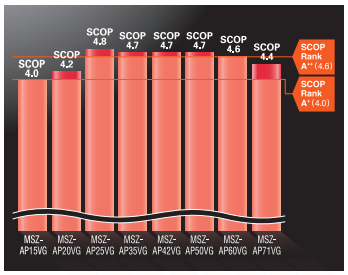

Compact and stylish

All the classes are introduced as single-split and multi-systems. From small rooms to living rooms, it is possible to coordinate residences with a unified design.

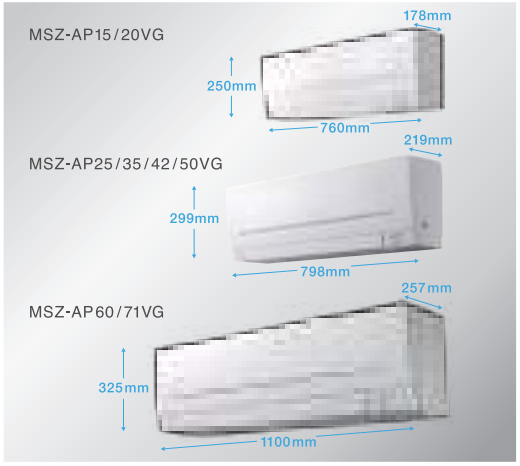

■Living

■Study

■Bedroom

Evolved comfortable convenience function

Horizontal Airflow

The new airflow control which spreads across the ceiling eliminates the uncomfortable drafty feeling.

Auto Vane Control

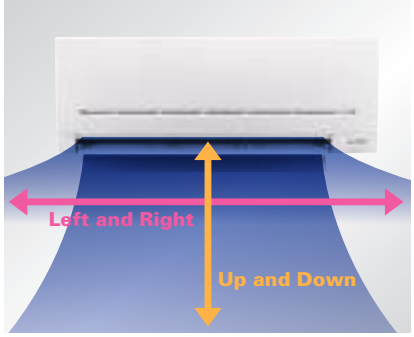

Auto vanes can be moved left and right, and up and down using the remote controller.*

The Function

*Only for 25/35/42/50/60/71 models.

High performance and compact size are realised by refining all parts

Comfort

Vertical and Horizontal Vane

New vertical and horizontal vanes are double the size of the previous model, improving airflow control elaborately.

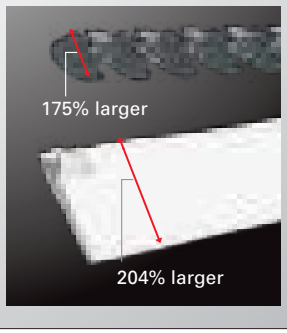

High Performance

Line Flow Fan

New line flow Fan is 122% larger and 108% wider than the previous model, leading to higher aerodynamic performance. Also, same sound level as the previous model.

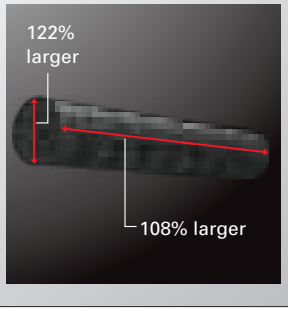

High Performance

Heat Exchanger

New ø5 Heat exchanger enables to realise 32% thinner depth than the previous model. It realises low pressure loss leading to high performance.

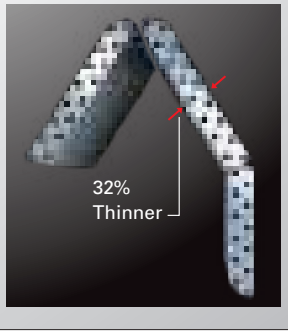

"Weekly Timer"

Easily set desired temperatures and operation start/stop times to match lifestyle patterns. Reduce wasted energy consumption by using the timer to prevent forgetting to turn off the unit and eliminate temperature setting adjustments.

■ Example Operation Pattern (Winter/Heating mode)

	Mon.	Tues.	Wed.	Thurs.	Fri.	Sat.	Sun.
6:00	ON 20°C	ON 20°C	ON 20°C	ON 20°C	ON 20°C	ON 20°C	ON 20°C
8:00	Automatically changes to high-power operation at wake-up time						
10:00	OFF	OFF	OFF	OFF	OFF	ON 18°C	ON 18°C
12:00	Automatically turned off during work hours					Midday is warmer, so the temperature is set lower	
14:00							
16:00							
18:00	ON 20°C	ON 20°C	ON 20°C	ON 20°C	ON 20°C	ON 20°C	ON 20°C
20:00	Automatically turns on, synchronized with arrival at home					Automatically raises temperature setting to match time when outside-air temperature is low	
22:00							
(during sleeping hours)	ON 18°C	ON 18°C	ON 18°C	ON 18°C	ON 18°C	ON 18°C	ON 18°C
	Automatically lowers temperature at bedtime for energy-saving operation at night						

Settings

Pattern Settings: Input up to four settings for each day

Settings: •Start/Stop operation •Temperature setting ✻The operation mode cannot be set.

■ Easy set-up using dedicated buttons

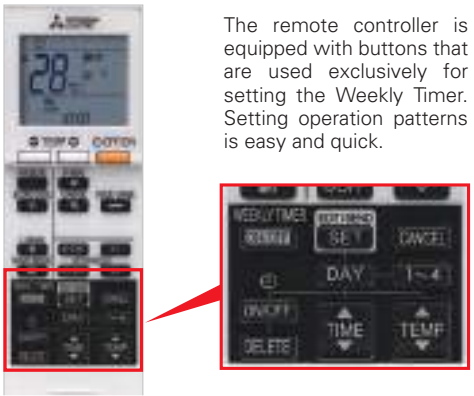

The remote controller is equipped with buttons that are used exclusively for setting the Weekly Timer. Setting operation patterns is easy and quick.

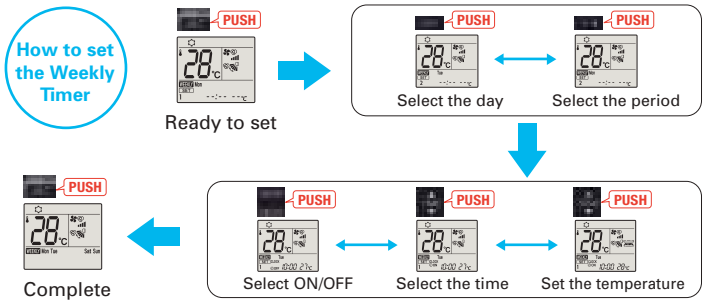

- Start by pushing the "SET" button and follow the instructions to set the desired patterns. Once all of the desired patterns are input, point the top end of the remote controller at the indoor unit and push the "SET" button one more time. (Push the "SET" button only after inputting all of the desired patterns into the remote controller memory. Pushing the "CANCEL" button will end the set-up process without sending the operation patterns to the indoor unit).
- It takes a few seconds to transmit the Weekly Timer operation patterns to the indoor unit. Please continue to point the remote controller at the indoor unit until all data has been sent.
- When "Weekly Timer" is set, temperature can not be set 10°C. (only for 15/20 models)

Low Standby Power

Electrical devices consume standby power even when they are not in actual use. While we obviously strive to reduce power consumption during actual use, reducing this wasted power that cannot be seen is also very important.

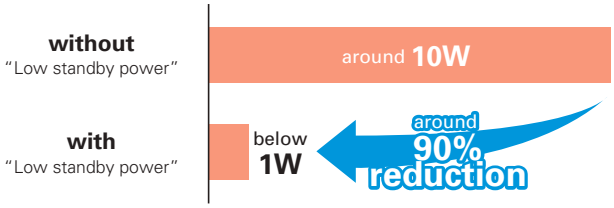

Air Purifying Filter

(MSZ-AP25/35/42/50/60/71)

This filter generates stable antibacterial and deodourising effects. The size of the three-dimensional surface has been increased as well, enlarging the filter capture area. These features give the Air Purifying Filter better dust collection performance than conventional filters. The superior air-cleaning effectiveness raises room comfort yet another level.

✻ It is okay to wash the filter with water (air-cleaning effect is maintained)

3D surface (Waved surface)

"i save" Mode

"i save" is a simplified setting function that recalls the preferred (preset) temperature by pressing a single button on the remote controller. Press the same button twice in repetition to immediately return to the previous temperature setting. Using this function contributes to comfortable, waste-free operation, realising the most suitable air conditioning settings and saving on power consumption when, for example, leaving the room or going to bed.

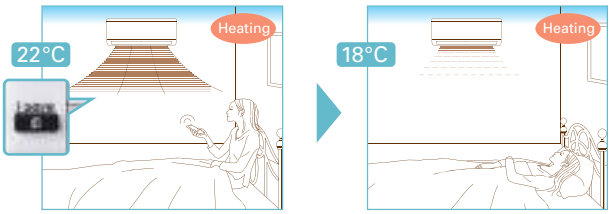

✻ Temperature can be preset to 10°C when heating in the "i-save" mode.

Outdoor Units for Cold Region

(MSZ-AP25/35/42/50)

Single split-type outdoor units are available in both standard and heater-equipped units. An electric heater is installed in each unit to prevent freezing in cold outdoor environments.

Night Mode

(MSZ-AP20/25/35/42/50/60/71)

When Night Mode is activated using the wireless remote controller, air conditioner operation will switch to the following settings.

- The brightness of the operation indicator lamp will become dimmer.
- The beeping sound will be disabled.
- The outdoor operating noise will drop to 3dB lower than the rated operating noise specification.

*The cooling/heating capacity may drop.

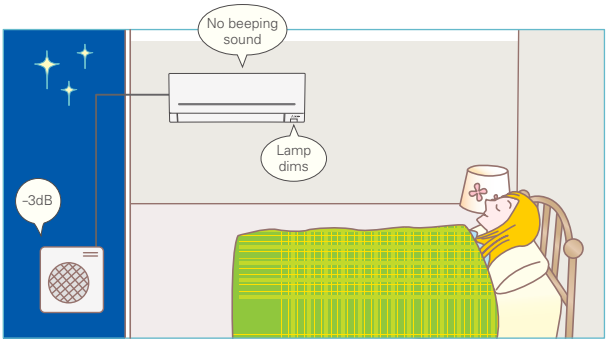

Quiet Operation

The indoor unit noise level is as low as 19dB for AP Series, offering a peaceful inside environment.

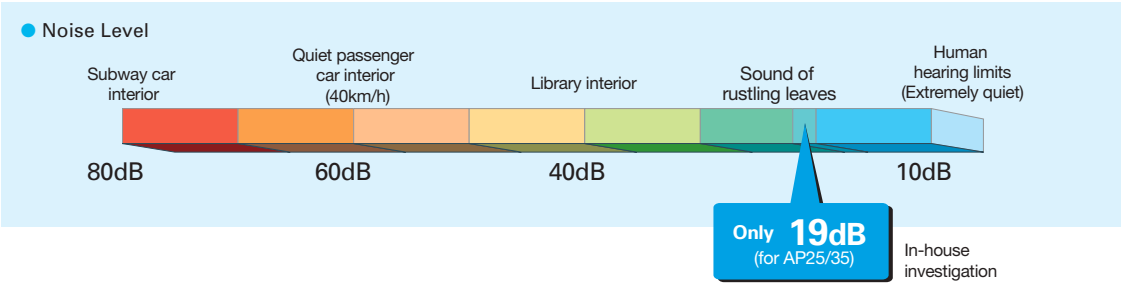

Built-in Wi-Fi Interface

(MSZ-AP15/20/25/35/42/50/60/71VGK)

The indoor unit is equipped with a Wi-Fi Interface inside an exclusive pocket in the unit.
This eliminates the need to install a Wi-Fi interface, and also contributes to the beautiful appearance since the interface is hidden.

LED Backlight Remote Controller

Blacklight function incorporated, making screen easy to read in the dark. Even in dimly lit rooms, the screen can be seen clearly for trouble-free remote controller operation.

MSZ-A SERIES

Indoor Unit R32 R410A

MSZ-AP15/20VG(K)

reddot award 2018
winner

Outdoor Unit R32

MUZ-AP20VG

Remote Controller

Econo Cool | Natural White | AUTO VANE | SWING | AUTO | Weekly Timer | i save | ACO | Auto Restart | Optional | Group Control (Optional) | M-NET connection (Optional) | Wi-Fi Interface (VGK model) | MXZ connection | Back Light Remote | Flare connection | Self Diagnosis | Failure Recall

Type				Inverter Heat Pump					
Indoor Unit				MSZ-AP15VG(K)	MSZ-AP20VG(K)	MSZ-AP25VG(K)	MSZ-AP25VG(K)	MSZ-AP35VG(K)	MSZ-AP35VG(K)
Outdoor Unit				MUZ-AP15VG	MUZ-AP20VG	MUZ-AP25VG	MUZ-AP25VGH	MUZ-AP35VG	MUZ-AP35VGH
Refrigerant				Single: R32(*1) / Multi: R410A or R32(*1)					
Power Supply	Source			Outdoor Power supply					
	Outdoor (V / Phase / Hz)			230 / Single / 50					
Cooling	Design load		kW	1.5	2.0	2.5	2.5	3.5	3.5
	Annual electricity consumption (*2)		kWh/a	72	81	101	101	142	142
	SEER (*4)			7.2	8.6	8.6	8.6	8.6	8.6
		Energy efficiency class		A++	A+++	A+++	A+++	A+++	A+++
	Capacity	Rated	kW	1.5	2.0	2.5	2.5	3.5	3.5
		Min-Max	kW	0.5-2.2	0.6-2.7	0.9-3.4	0.9-3.4	1.1-3.8	1.1-3.8
	Total Input	Rated	kW	0.370	0.460	0.600	0.600	0.990	0.990
Heating (Average Season)(*5)	Design load		kW	1.6 (-10°C)	2.3 (-10°C)	2.4 (-10°C)	2.4 (-10°C)	2.9 (-10°C)	2.9 (-10°C)
	Declared Capacity	at reference design temperature	kW	1.6 (-10°C)	2.3 (-10°C)	2.4 (-10°C)	2.4 (-10°C)	2.9 (-10°C)	2.9 (-10°C)
		at bivalent temperature	kW	1.6 (-10°C)	2.3 (-10°C)	2.4 (-10°C)	2.4 (-10°C)	2.9 (-10°C)	2.9 (-10°C)
		at operation limit temperature	kW	1.6 (-15°C)	2.2 (-15°C)	2.4 (-15°C)	2.2 (-20°C)	2.6 (-15°C)	2.4 (-20°C)
	Back up heating capacity		kW	0.0 (-10°C)	0.0 (-10°C)	0.0 (-10°C)	0.0 (-10°C)	0.0 (-10°C)	0.0 (-10°C)
	Annual electricity consumption (*2)		kWh/a	559	766	698	703	862	873
	SCOP (*4)			4.0	4.2	4.8	4.7	4.7	4.6
		Energy efficiency class		A+	A+	A++	A++	A++	A++
	Capacity	Rated	kW	2.0	2.5	3.2	3.2	4.0	4.0
		Min-Max	kW	0.5-3.1	0.5-3.5	1.0-4.1	1.0-4.1	1.3-4.6	1.3-4.6
	Total Input	Rated	kW	0.500	0.600	0.780	0.780	1.030	1.030
Operating Current (Max)			A	5.5	7.0	7.1	7.1	8.5	8.5
Indoor Unit	Input	Rated	kW	0.017	0.019	0.026	0.026	0.026	0.026
	Operating Current (Max)		A	0.17	0.2	0.3	0.3	0.3	0.3
	Dimensions	H*W*D	mm	250-760-178	250-760-178	299-798-219	299-798-219	299-798-219	299-798-219
	Weight		kg	8.2	8.2	10.5	10.5	10.5	10.5
	Air Volume (SLo-Lo-Mid-Hi-SHi(*3))(Dry/Wet)	Cooling	m^3/min	3.5 - 3.9 - 4.6 - 5.5 - 6.4	3.5 - 3.9 - 4.6 - 5.5 - 6.9	4.9 - 5.9 - 7.1 - 8.7 - 11.4	4.9 - 5.9 - 7.1 - 8.7 - 11.4	4.9 - 5.9 - 7.1 - 8.7 - 11.4	4.9 - 5.9 - 7.1 - 8.7 - 11.4
		Heating	m^3/min	3.7 - 4.4 - 5.0 - 6.0 - 6.8	3.7 - 4.4 - 5.0 - 6.0 - 7.3	4.9 - 5.9 - 7.3 - 8.9 - 12.9	4.9 - 5.9 - 7.3 - 8.9 - 12.9	4.9 - 5.9 - 7.3 - 8.9 - 12.9	4.9 - 5.9 - 7.3 - 8.9 - 12.9
	Sound Level (SPL) (SLo-Lo-Mid-Hi-SHi(*3))	Cooling	dB(A)	21 - 26 - 30 - 35 - 40	21 - 26 - 30 - 35 - 42	19 - 24 - 30 - 36 - 42	19 - 24 - 30 - 36 - 42	19 - 24 - 30 - 36 - 42	19 - 24 - 30 - 36 - 42
		Heating	dB(A)	21 - 26 - 30 - 35 - 40	21 - 26 - 30 - 35 - 42	19 - 24 - 34 - 39 - 45	19 - 24 - 34 - 39 - 45	19 - 24 - 31 - 38 - 45	19 - 24 - 31 - 38 - 45
	Sound Level (PWL)	Cooling	dB(A)	59	60	57	57	57	57
Outdoor Unit	Dimensions	H*W*D	mm	538-699-249	550-800-285	550-800-285	550-800-285	550-800-285	550-800-285
	Weight		kg	23	31	31	31	31	31
	Air Volume	Cooling	m^3/min	26	32.2	32.2	32.2	32.2	32.2
		Heating	m^3/min	21	29.8	29.8	29.8	33.8	33.8
	Sound Level (SPL)	Cooling	dB(A)	50	47	47	47	49	49
		Heating	dB(A)	50	48	48	48	50	50
	Sound Level (PWL)	Cooling	dB(A)	63	59	59	59	61	61
	Operating Current (Max)		A	5.3	6.8	6.8	6.8	8.2	8.2
	Breaker Size		A	10	10	10	10	10	10
Ext. Piping	Diameter	Liquid/Gas	mm	6.35 / 9.52	6.35 / 9.52	6.35 / 9.52	6.35 / 9.52	6.35 / 9.52	6.35 / 9.52
	Max.Length	Out-In	m	20	20	20	20	20	20
	Max.Height	Out-In	m	12	12	12	12	12	12
Guaranteed Operating Range (Outdoor)		Cooling	°C	-10 ~ +46	-10 ~ +46	-10 ~ +46	-10 ~ +46	-10 ~ +46	-10 ~ +46
		Heating	°C	-15 ~ +24	-15 ~ +24	-15 ~ +24	-20 ~ +24	-15 ~ +24	-20 ~ +24

(*1) Refrigerant leakage contributes to climate change. Refrigerant with lower global warming potential (GWP) would contribute less to global warming than a refrigerant with higher GWP, if leaked to the atmosphere. This appliance contains a refrigerant fluid with a GWP equal to 550. This means that if 1 kg of this refrigerant fluid would be leaked to the atmosphere, the impact on global warming would be 550 times higher than 1 kg of CO_2, over a period of 100 years. Never try to interfere with the refrigerant circuit yourself or disassemble the product yourself and always ask a professional.
The GWP of R32 is 675 in the IPCC 4th Assessment Report.
(*2) Energy consumption based on standard test results. Actual energy consumption will depend on how the appliance is used and where it is located.
(*3) SHi: Super High
(*4) SEER, SCOP and other related description are based on COMMISSION DELEGATED REGULATION (EU) No.626/2011. The temperature conditions for calculating SCOP are based on "Average Season".
(*5) Please see page 51-52 for heating (warmer season) specifications.

MSZ-A SERIES

Joint Lap | DC Fan Motor | PAM | Grooved Piping | SEER A+++ | SCOP A++

Indoor Unit R32 R410A

✻VGK model Wi-Fi Interface built-in.

MSZ-AP25/35/42/50VG(K)

GOOD DESIGN AWARD 2017

reddot award 2018 winner

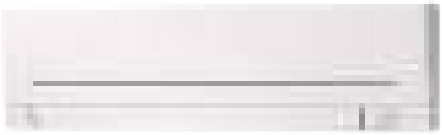

MSZ-AP60/71VG(K)

Outdoor Unit R32

MUZ-AP25/35/42VG(H)

MUZ-AP50VG(H)/60VG

MUZ-AP71VG

Remote Controller

Econo Cool | Natural White | AUTO VANE | Silver-ion (Optional) | Air Purifying | SWING | SWING | AUTO | WIDE&LONG (60/71) | Weekly Timer | i save | ACO | Auto Restart | Low Temp Cooling | (Optional)

Group Control (Optional) | M-NET connection (Optional) | Wi-Fi Interface (VGK model) | MXZ connection | 10°C | (Indoor) | Night | Back Light Remote | Cleaning-free, pine reuse | Flare connection | Self Diagnosis | Failure Recall

Type				Inverter Heat Pump					
Indoor Unit				MSZ-AP42VG(K)	MSZ-AP42VG(K)	MSZ-AP50VG(K)	MSZ-AP50VG(K)	MSZ-AP60VG(K)	MSZ-AP71VG(K)
Outdoor Unit				MUZ-AP42VG	MUZ-AP42VGH	MUZ-AP50VG	MUZ-AP50VGH	MUZ-AP60VG	MUZ-AP71VG
Refrigerant				Single: R32(*1) / Multi: R410A or R32(*1)				Single: R32(*1)	
Power Supply	Source			Outdoor Power supply					
	Outdoor (V / Phase / Hz)			230 / Single / 50					
Cooling	Design load		kW	4.2	4.2	5.0	5.0	6.1	7.1
	Annual electricity consumption (*2)		kWh/a	188	188	236	236	288	345
	SEER (*4)			7.8	7.8	7.4	7.4	7.4	7.2
		Energy efficiency class		A++	A++	A++	A++	A++	A++
	Capacity	Rated	kW	4.2	4.2	5.0	5.0	6.1	7.1
		Min-Max	kW	0.9-4.5	0.9-4.5	1.4-5.4	1.4-5.4	1.4-7.3	2.0-8.7
	Total Input	Rated	kW	1.300	1.300	1.550	1.550	1.590	2.010
Heating (Average Season)(*5)	Design load		kW	3.8 (-10°C)	3.8 (-10°C)	4.2 (-10°C)	4.2 (-10°C)	4.6 (-10°C)	6.7 (-10°C)
	Declared Capacity	at reference design temperature	kW	3.8 (-10°C)	3.8 (-10°C)	4.2 (-10°C)	4.2 (-10°C)	4.6 (-10°C)	6.7 (-10°C)
		at bivalent temperature	kW	3.8 (-10°C)	3.8 (-10°C)	4.2 (-10°C)	4.2 (-10°C)	4.6 (-10°C)	6.7 (-10°C)
		at operation limit temperature	kW	4.2 (-15°C)	3.8 (-20°C)	4.7 (-15°C)	4.2 (-20°C)	3.7 (-15°C)	5.4 (-15°C)
	Back up heating capacity		kW	0.0 (-10°C)	0.0 (-10°C)	0.0 (-10°C)	0.0 (-10°C)	0.0 (-10°C)	0.0 (-10°C)
	Annual electricity consumption (*2)		kWh/a	1120	1134	1250	1275	1398	2132
	SCOP (*4)			4.7	4.6	4.7	4.6	4.6	4.4
		Energy efficiency class		A++	A++	A++	A++	A++	A+
	Capacity	Rated	kW	5.4	5.4	5.8	5.8	6.8	8.1
		Min-Max	kW	1.3-6.0	1.3-6.0	1.4-7.3	1.4-7.3	2.0-8.6	2.2-10.3
	Total Input	Rated	kW	1.490	1.490	1.600	1.600	1.670	2.120
Operating Current (Max)			A	9.9	9.9	13.6	13.6	14.1	16.4
Indoor Unit	Input	Rated	kW	0.032	0.032	0.032	0.032	0.049	0.045
	Operating Current (Max)		A	0.3	0.3	0.3	0.3	0.5	0.4
	Dimensions	H*W*D	mm	299-798-219	299-798-219	299-798-219	299-798-219	325-1100-257	325-1100-257
	Weight		kg	10.5	10.5	10.5	10.5	16.0	17.0
	Air Volume (SLo-Lo-Mid-Hi-SHi(*3)) (Dry/Wet)	Cooling	m^3/min	5.4 - 6.5 - 7.7 - 9.3 - 11.4	5.4 - 6.5 - 7.7 - 9.3 - 11.4	6.0 - 7.2 - 8.4 - 10.0 - 12.6	6.0 - 7.2 - 8.4 - 10.0 - 12.6	9.4 - 11.0 - 13.2 - 16.0 - 18.9	9.6 - 11.5 - 13.2 - 15.3 - 18.6
		Heating	m^3/min	5.3 - 6.1 - 7.7 - 9.4 - 14.0	5.3 - 6.1 - 7.7 - 9.4 - 14.0	5.6 - 6.5 - 8.2 - 10.0 - 14.0	5.6 - 6.5 - 8.2 - 10.0 - 14.0	10.8- 13.4 - 15.4 - 17.4 - 20.3	10.2- 11.5 - 13.2 - 15.3 - 19.2
	Sound Level (SPL) (SLo-Lo-Mid-Hi-SHi(*3))	Cooling	dB(A)	21 - 29 - 34 - 38 - 42	21 - 29 - 34 - 38 - 42	28 - 33 - 36 - 40 - 44	28 - 33 - 36 - 40 - 44	29 - 37 - 41 - 45 - 48	30 - 37 - 41 - 45 - 49
		Heating	dB(A)	21 - 29 - 35 - 40 - 45	21 - 29 - 35 - 40 - 45	28 - 33 - 38 - 43 - 48	28 - 33 - 38 - 43 - 48	30 - 37 - 41 - 45 - 48	30 - 37 - 41 - 45 - 51
	Sound Level (PWL)	Cooling	dB(A)	57	57	58	58	65	65
Outdoor Unit	Dimensions	H*W*D	mm	550-800-285	550-800-285	714-800-285	714-800-285	714-800-285	880-840-330
	Weight		kg	35	35	40	40	40	55
	Air Volume	Cooling	m^3/min	30.4	30.4	40.5	40.5	52.1	54.1
		Heating	m^3/min	32.7	32.7	40.5	40.5	52.1	47.9
	Sound Level (SPL)	Cooling	dB(A)	50	50	52	52	56	56
		Heating	dB(A)	51	51	52	52	57	55
	Sound Level (PWL)	Cooling	dB(A)	61	61	64	64	69	69
	Operating Current (Max)		A	9.6	9.6	13.3	13.3	13.6	16.0
	Breaker Size		A	10	10	16	16	16	20
Ext. Piping	Diameter	Liquid/Gas	mm	6.35 / 9.52	6.35 / 9.52	6.35 / 9.52	6.35 / 9.52	6.35 / 12.7	6.35 / 12.7
	Max.Length	Out-In	m	20	20	20	20	30	30
	Max.Height	Out-In	m	12	12	12	12	15	15
Guaranteed Operating Range (Outdoor)		Cooling	℃	-10 ~ +46	-10 ~ +46	-10 ~ +46	-10 ~ +46	-10 ~ +46	-10 ~ +46
		Heating	℃	-15 ~ +24	-20 ~ +24	-15 ~ +24	-20 ~ +24	-15 ~ +24	-15 ~ +24

(*1) Refrigerant leakage contributes to climate change. Refrigerant with lower global warming potential (GWP) would contribute less to global warming than a refrigerant with higher GWP, if leaked to the atmosphere. This appliance contains a refrigerant fluid with a GWP equal to 550. This means that if 1 kg of this refrigerant fluid would be leaked to the atmosphere, the impact on global warming would be 550 times higher than 1 kg of CO_2, over a period of 100 years. Never try to interfere with the refrigerant circuit yourself or disassemble the product yourself and always ask a professional.
The GWP of R32 is 675 in the IPCC 4th Assessment Report.
(*2) Energy consumption based on standard test results. Actual energy consumption will depend on how the appliance is used and where it is located.
(*3) SHi: Super High
(*4) SEER, SCOP and other related description are based on COMMISSION DELEGATED REGULATION (EU) No.626/2011. The temperature conditions for calculating SCOP are based on "Average Season".
(*5) Please see page 51-52 for heating (warmer season) specifications.

KIRIGAMINE ZEN 禅

MSZ-E SERIES

Single / Multi

R410A
Multi

MSZ-EF18-50VGB

GOOD DESIGN AWARD 2015

reddot award 2015 winner

Developed to complement modern interior room décor, Kirigamine ZEN air conditioners are available in three colours specially chosen to blend in naturally wherever installed.

Stylish Line-up Matches Any Room Décor

The streamlined wall-mounted indoor units have eloquent silver-bevelled edges, expressing sophistication and quality. Combining impressively low power consumption and quiet yet powerful performance, these units provide a best-match scenario for diverse interior designs while simultaneously ensuring maximum room and energy savings.

Energy-efficient Operation

DC Inverter

25-35 SEER A+++ 25-42* SCOP A++

*except for VEH

All models in the series have achieved high energy-savings rating, and are contributing to reduced energy consumption in homes, offices and a range of other settings. Offered in a variety of output capacities and installation patterns, the vast applicability promises an ideal match for any user.

Outdoor / Indoor	Rank A for single connection MUZ-EF25/35VG(H) MUZ-EF42/50VG	Compatibility MXZ 2F33VF	2F42VF	2F53VF	3F54VF	3F68VF	4F72VF
MSZ-EF18VG	–	✓	✓	✓	✓	✓	✓
MSZ-EF22VG	–	✓	✓	✓	✓	✓	✓
MSZ-EF25VG	A+++/A++(A++*)	✓	✓	✓	✓	✓	✓
MSZ-EF35VG	A+++/A++(A+*)		✓	✓	✓	✓	✓
MSZ-EF42VG	A++/A++			✓	✓	✓	✓
MSZ-EF50VG	A++/A+			✓	✓	✓	✓

*VEH

Quiet Comfort All Day Long

Mitsubishi Electric's advanced "Silent Mode" fan speed setting provides super-quiet operation as low as 19dB for EF18/22/25 models for cooling. This unique feature makes the Kirigamine ZEN series ideal for use in any situation.

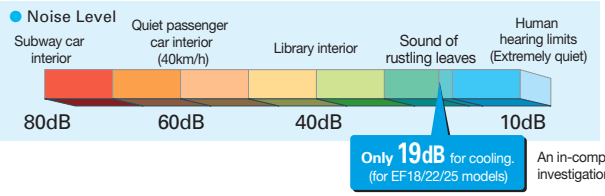

An in-company investigation

Superior Exterior and Operating Design Concept

The indoor unit of the Kirigamine ZEN keeps its amazingly thin form even during operation. The only physical change notable is the movement of the variable vent. As a result, a slim attractive look is maintained.

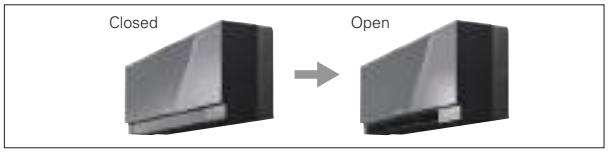

Silver-ionized Air Purifier Filter

The high performance filter is attached as standard. Captures the bacteria, pollen and other allergens in the air and neutralises them.

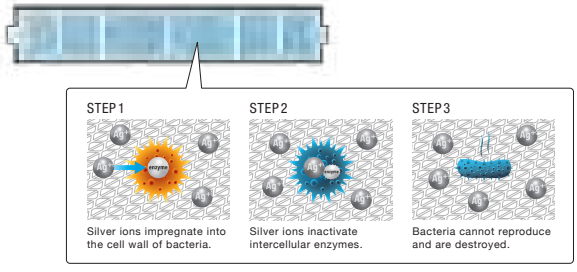

Low Standby Power

Electrical devices consume standby power even when they are not in actual use. While we obviously strive to reduce power consumption during actual use, reducing this wasted power that cannot be seen is also very important.

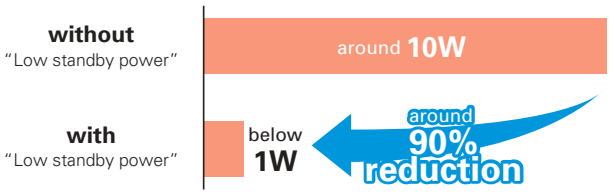

Outdoor Units for Cold Region (25/35)

Single split-type outdoor units are available in both standard and heater-equipped units. An electric heater is installed in each unit to prevent freezing in cold outdoor environments.

Standard Units

MUZ-EF25/35VG

Heater Installed

MUZ-EF25/35VGH

MSZ-E SERIES

DC Inverter | Joint Lap | DC Fan Motor | PAM | Grooved Piping | 25 - 35 SEER A+++ | 25 - 42* SCOP A++ *except for VEH

Indoor Unit / Remote Controller

R410A

White

MSZ-EF18/22/25/35/42/50VG(K)W

Silver

MSZ-EF18/22/25/35/42/50VG(K)S

Black

MSZ-EF18/22/25/35/42/50VG(K)B*

GOOD DESIGN AWARD 2015

reddot award 2015 winner

* Soft-dry Cloth is enclosed with Black models.
* VGK model Wi-Fi interface built-in

Outdoor Unit

MUZ-EF25/35VG(H),42VG

MUZ-EF50VG

Econo Cool | AUTO VANE | Silver-ion | Air Purifying | SWING | AUTO | Weekly Timer | i save | ACO | Auto Restart | Low Temp Cooling | Optional | Centralised On/Off (Optional) | Group Control (Optional) | Wi-Fi Interface (VGK model)

MXZ connection | Back Light Remote | Cleaning-free pipe reuse | Flare connection | Self Diagnosis | Failure Recall

Type				Inverter Heat Pump							
Indoor Unit				MSZ-EF18VG(K)	MSZ-EF22VG(K)	MSZ-EF25VG(K)	MSZ-EF25VG(K)	MSZ-EF35VG(K)	MSZ-EF35VG(K)	MSZ-EF42VG(K)	MSZ-EF50VG(K)
Outdoor Unit				for MXZ connection		MUZ-EF25VG	MUZ-EF25VGH	MUZ-EF35VG	MUZ-EF35VGH	MUZ-EF42VG	MUZ-EF50VG
Refrigerant				R32(*1)							
Power Supply	Source			Outdoor Power supply							
	Outdoor (V / Phase / Hz)			230/Single/50							
Cooling	Design load		kW	-	-	2.5	2.5	3.5	3.5	4.2	5.0
	Annual electricity consumption (*2)		kWh/a	-	-	96	96	139	139	186	233
	SEER (*4)			-	-	9.1	9.1	8.8	8.8	7.9	7.5
		Energy efficiency class		-	-	A+++	A+++	A+++	A+++	A++	A++
	Capacity	Rated	kW	-	-	2.5	2.5	3.5	3.5	4.2	5.0
		Min-Max	kW	-	-	0.9-3.4	0.9-3.4	1.1-4.0	1.1-4.0	0.9-4.6	1.4-5.4
	Total Input	Rated	kW	-	-	0.540	0.540	0.910	0.910	1.200	1.540
Heating (Average Season)(*5)	Design load		kW	-	-	2.4 (-10°C)	2.4 (-10°C)	2.9 (-10°C)	2.9 (-10°C)	3.8 (-10°C)	4.2 (-10°C)
	Declared Capacity	at reference design temperature	kW	-	-	2.4 (-10°C)	2.4 (-10°C)	2.9 (-10°C)	2.9 (-10°C)	3.8 (-10°C)	4.2 (-10°C)
		at bivalent temperature	kW	-	-	2.4 (-10°C)	2.4 (-10°C)	2.9 (-10°C)	2.9 (-10°C)	3.8 (-10°C)	4.2 (-10°C)
		at operation limit temperature	kW	-	-	2.0 (-15°C)	1.6 (-20°C)	2.4 (-15°C)	1.7 (-20°C)	3.4 (-15°C)	3.5 (-15°C)
	Back up heating capacity		kW	-	-	0.0 (-10°C)	0.0 (-10°C)	0.0 (-10°C)	0.0 (-10°C)	0.0 (-10°C)	0.0 (-10°C)
	Annual electricity consumption (*2)		kWh/a	-	-	713	727	882	900	1151	1304
	SCOP (*4)			-	-	4.7	4.6	4.6	4.5	4.6	4.5
		Energy efficiency class		-	-	A++	A++	A++	A+	A++	A+
	Capacity	Rated	kW	-	-	3.2	3.2	4.0	4.0	5.4	5.8
		Min-Max	kW	-	-	1.0-4.2	1.0-4.2	1.3-5.1	1.3-5.1	1.3-6.3	1.4-7.5
	Total Input	Rated	kW	-	-	0.700	0.700	0.950	0.950	1.455	1.560
Operating Current (Max)			A	-	-	7.1	7.1	7.1	7.1	10.0	14
Indoor Unit	Input	Rated	kW	0.026	0.026	0.026	0.026	0.030	0.030	0.033	0.043
	Operating Current (Max)		A	0.3	0.3	0.3	0.3	0.3	0.3	0.4	0.4
	Dimensions	H*W*D	mm	299-885-195	299-885-195	299-885-195	299-885-195	299-885-195	299-885-195	299-885-195	299-885-195
	Weight		kg	11.5	11.5	11.5	11.5	11.5	11.5	11.5	11.5
	Air Volume (SLo-Lo-Mid-Hi-SHi(*3))(Dry/Wet))	Cooling	m^3/min	4.0 - 4.6 - 6.3 - 8.3 - 10.5	4.0 - 4.6 - 6.3 - 8.3 - 10.5	4.0 - 4.6 - 6.3 - 8.3 - 10.5	4.0 - 4.6 - 6.3 - 8.3 - 10.5	4.0 - 4.6 - 6.3 - 8.3 - 10.5	4.0 - 4.6 - 6.3 - 8.3 - 10.5	5.8 - 6.6 - 7.7 - 8.9 - 11.2	5.8 - 6.8 - 7.9 - 9.2 - 11.3
		Heating	m^3/min	4.0 - 4.6 - 6.2 - 8.9 - 11.9	4.0 - 4.6 - 6.2 - 8.9 - 11.9	4.0 - 4.6 - 6.2 - 8.9 - 11.9	4.0 - 4.6 - 6.2 - 8.9 - 11.9	4.0 - 4.6 - 6.2 - 8.9 - 12.7	4.0 - 4.6 - 6.2 - 8.9 - 12.7	5.5 - 6.3 - 7.8 - 9.9 - 13.2	6.4 - 7.2 - 9.0 - 11.1 - 14.6
	Sound Level (SPL) (SLo-Lo-Mid-Hi-SHi(*3))	Cooling	dB(A)	19 - 23 - 29 - 36 - 42	19 - 23 - 29 - 36 - 42	19 - 23 - 29 - 36 - 42	19 - 23 - 29 - 36 - 42	21 - 24 - 30 - 36 - 42	21 - 24 - 30 - 36 - 42	28 - 31 - 35 - 39 - 43	30 - 33 - 36 - 40 - 43
		Heating	dB(A)	21 - 24 - 29 - 37 - 45	21 - 24 - 29 - 37 - 45	21 - 24 - 29 - 37 - 45	21 - 24 - 29 - 37 - 45	21 - 24 - 30 - 38 - 46	21 - 24 - 30 - 38 - 46	28 - 30 - 35 - 41 - 48	30 - 33 - 37 - 43 - 49
	Sound Level (PWL)	Cooling	dB(A)	60	60	60	60	60	60	60	60
Outdoor Unit	Dimensions	H*W*D	mm	-	-	550-800-285	550-800-285	550-800-285	550-800-285	550-800-285	714-800-285
	Weight		kg	-	-	31	31	34	34	35	40
	Air Volume	Cooling	m^3/min	-	-	27.8	27.8	34.3	34.3	32.0	40.2
		Heating	m^3/min	-	-	29.8	29.8	32.7	32.7	32.7	40.2
	Sound Level (SPL)	Cooling	dB(A)	-	-	47	47	49	49	50	52
		Heating	dB(A)	-	-	48	48	50	50	51	52
	Sound Level (PWL)	Cooling	dB(A)	-	-	58	58	62	62	62	65
	Operating Current (Max)		A	-	-	6.8	6.8	6.8	6.8	9.6	13.6
	Breaker Size		A	-	-	10	10	10	10	12	16
Ext. Piping	Diameter	Liquid/Gas	mm	-	-	6.35 / 9.52	6.35 / 9.52	6.35 / 9.52	6.35 / 9.52	6.35 / 9.52	6.35 / 9.52
	Max.Length	Out-In	m	-	-	20	20	20	20	20	30
	Max.Height	Out-In	m	-	-	12	12	12	12	12	15
Guaranteed Operating Range (Outdoor)		Cooling	°C	-	-	-10 ~ +46	-10 ~ +46	-10 ~ +46	-10 ~ +46	-10 ~ +46	-10 ~ +46
		Heating	°C	-	-	-15 ~ +24	-20 ~ +24	-15 ~ +24	-20 ~ +24	-15 ~ +24	-15 ~ +24

(*1) Refrigerant leakage contributes to climate change. Refrigerant with lower global warming potential (GWP) would contribute less to global warming than a refrigerant with higher GWP, if leaked to the atmosphere. This appliance contains a refrigerant fluid with a GWP equal to 550. This means that if 1 kg of this refrigerant fluid would be leaked to the atmosphere, the impact on global warming would be 550 times higher than 1 kg of CO_2, over a period of 100 years. Never try to interfere with the refrigerant circuit yourself or disassemble the product yourself and always ask a professional.
The GWP of R32 is 675 in the IPCC 4th Assessment Report.
(*2) Energy consumption based on standard test results. Actual energy consumption will depend on how the appliance is used and where it is located.
(*3) SHi: Super High
(*4) SEER, SCOP and other related description are based on COMMISSION DELEGATED REGULATION (EU) No.626/2011. The temperature conditions for calculating SCOP are based on "Average Season".
(*5) Please see page 51-52 for heating (warmer season) specifications.

MSZ-BT SERIES

MSZ-BT20/25/35/50VG(K)

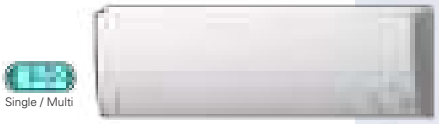

Single / Multi

High Energy Efficiency for Entire Range of Series

DC Inverter | 20-50 SEER A++ | 20-35 SCOP A++

All models in the series, from the low-capacity 20 to the high-capacity 50, have achieved the "Rank A++" for SEER and size 25 and 35 have achived the "Rank A++" for SCOP as energy-savings rating. For home use, such as in bedrooms and living rooms, to light commercial use, such as in offices, our air conditioners are contributing to reduced energy consumption in a wide range.

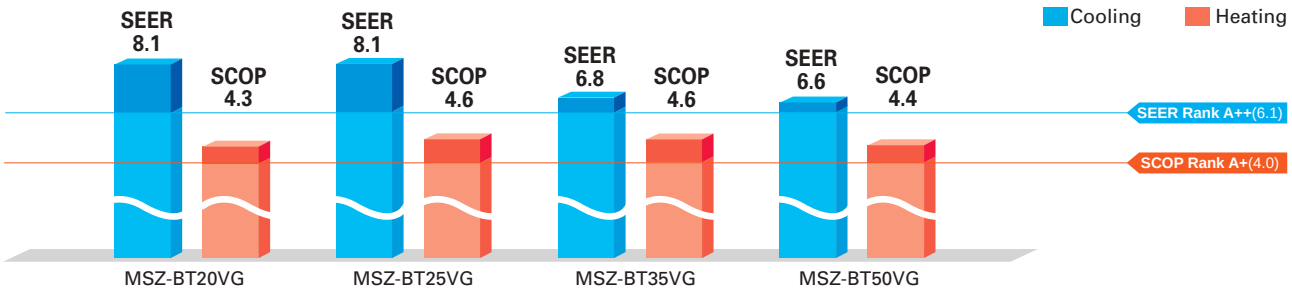

Quiet Operation

The indoor unit noise level is as low as 19dB for AP Series, offering a peaceful inside environment.

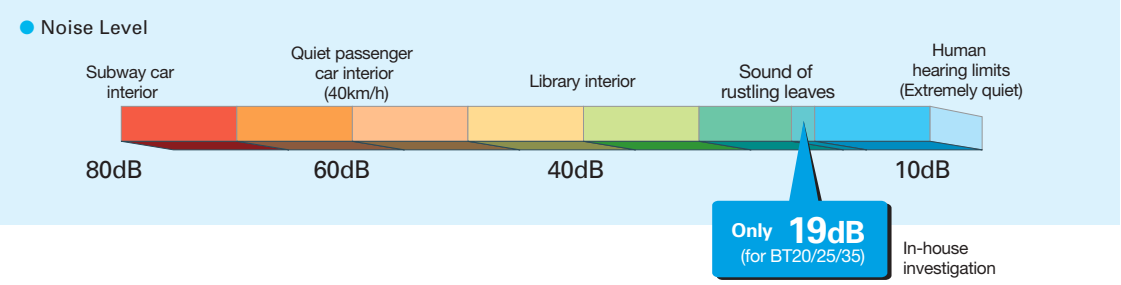

New Remote Controller

New stylish and compact remote controller features easy-read big display and simple button position with fundamental functions.

Built-in Wi-Fi Interface

(MSZ-BT20/25/35/50VGK) Wi-Fi Interface

The indoor unit is equipped with a Wi-Fi Interface inside an exclusive pocket in the unit.
This eliminates the need to install a Wi-Fi interface, and also contributes to the beautiful appearance since the interface is hidden.

MSZ-BT SERIES

DC Inverter | Joint Lap | DC Fan Motor | PAM | Grooved Piping | SEER A++ | SCOP A+

Indoor Unit

MSZ-BT20/25/35/50VG(K)

Outdoor Unit

MUZ-BT20VG

MUZ-BT25/35VG

MUZ-BT50VG

Remote Controller

Econo Cool | Natural White | AUTO VANE | Silver-ion (Optional) | SWING | AUTO | Auto Restart | Low Temp Cooling | (Optional) | Centralised On/Off (Optional) | Group Control (Optional) | Wi-Fi Interface (Optional) | MXZ connection | (Indoor) | Night | Cleaning-free, pipe reuse | Flare connection | Self Diagnosis | Failure Recall

Type				Inverter Heat Pump			
Indoor Unit				MSZ-BT20VG(K)	MSZ-BT25VG(K)	MSZ-BT35VG(K)	MSZ-BT50VG(K)
Outdoor Unit				MUZ-BT20VG	MUZ-BT25VG	MUZ-BT35VG	MUZ-BT50VG
Refrigerant				R32 (*1)			
Power Supply	Source			Outdoor Power supply			
	Outdoor (V / Phase / Hz)			230V/Single/50Hz			
Cooling	Design load		kW	2.0	2.5	3.5	5.0
	Annual electricity consumption (*2)		kWh/a	86	108	180	265
	SEER (*4)			8.1	8.1	6.8	6.6
		Energy efficiency class		A++	A++	A++	A++
	Capacity	Rated	kW	2.0	2.5	3.5	5.0
		Min-Max	kW	0.5-2.9	0.5-3.0	0.9-3.5	1.3-5.0
	Total Input	Rated	kW	0.450	0.700	1.240	2.050
Heating (Average Season)(*5)	Design load		kW	1.5 (-10ºC)	1.9 (-10ºC)	2.4 (-10ºC)	3.8 (-10ºC)
	Declared Capacity	at reference design temperature	kW	1.5 (-10ºC)	1.9 (-10ºC)	2.4 (-10ºC)	3.8 (-10ºC)
		at bivalent temperature	kW	1.5 (-10ºC)	1.9 (-10ºC)	2.4 (-10ºC)	3.8 (-10ºC)
		at operation limit temperature	kW	1.3 (-15ºC)	1.7 (-15ºC)	2.1 (-15ºC)	3.4 (-15ºC)
	Back up heating capacity		kW	0.0 (-10ºC)	0.0 (-10ºC)	0.0 (-10ºC)	0.0 (-10ºC)
	Annual electricity consumption (*2)		kWh/a	487	577	727	1209
	SCOP (*4)			4.3	4.6	4.6	4.4
		Energy efficiency class		A+	A++	A++	A+
	Capacity	Rated	kW	2.5	3.15	3.6	5.4
		Min-Max	kW	0.7-3.2	0.7-3.5	0.9-4.1	1.4-6.5
	Total Input	Rated	kW	0.550	0.750	0.930	1.550
Operating Current (Max)			A	5.6	7.0	7.0	10.0
Indoor Unit	Input	Rated	kW	0.024	0.024	0.031	0.037
	Operating Current(Max)		A	0.25	0.25	0.31	0.35
	Dimensions	H*W*D	mm	280-838-235	280-838-235	280-838-235	280-838-235
	Weight		kg	9	9	9	9
	Air Volume (Lo-Mid-Hi-SHi(*3)(Dry/Wet))	Cooling	m^3/min	4.2 - 5.2 - 6.8 - 8.7 - 10.9	4.2 - 5.2 - 6.8 - 8.7 - 10.9	4.2 - 5.2 - 6.8 - 8.7 - 13.2	6.3 - 7.6 - 9.0 - 11.0 - 13.2
		Heating	m^3/min	4.2 - 5.0 - 6.8 - 9.0 - 11.9	4.2 - 5.0 - 6.8 - 9.0 - 11.9	4.2 - 5.0 - 6.8 - 9.0 - 11.9	6.0 - 7.8 - 9.9 - 11.9 - 14.1
	Sound Level (SPL) (Lo-Mid-Hi-SHi(*3))	Cooling	dB(A)	19 - 22 - 30 - 37 - 43	19 - 22 - 30 - 37 - 43	19 - 22 - 31 - 38 - 46	29 - 33 - 36 - 40 - 46
		Heating	dB(A)	20 - 23 - 30 - 37 - 43	20 - 23 - 30 - 37 - 43	20 - 23 - 30 - 37 - 44	29 - 33 - 38 - 43 - 48
	Sound Level (PWL)	Cooling	dB(A)	57	57	60	60
Outdoor Unit	Dimensions	H*W*D	mm	538-699-249	538-699-249	538-699-249	550-800-285
	Weight		kg	23	24	24	35
	Air Volume	Cooling	m^3/min	30.3	32.2	32.2	30.4
		Heating	m^3/min	30.3	32.2	34.6	32.7
	Sound Level (SPL)	Cooling	dB(A)	50	50	52	50
		Heating	dB(A)	50	50	52	51
	Sound Level (PWL)	Cooling	dB(A)	63	63	64	64
	Operating Current (Max)		A	5.3	6.7	6.7	9.6
	Breaker Size		A	10	10	10	12
Ext. Piping	Diameter	Liquid/Gas	mm	6.35 / 9.52	6.35 / 9.52	6.35 / 9.52	6.35 / 12.7
	Max.Length	Out-In	m	20	20	20	20
	Max.Height	Out-In	m	12	12	12	12
Guaranteed Operating Range (Outdoor)		Cooling	℃	-10 ~ +46	-10 ~ +46	-10 ~ +46	-10 ~ +46
		Heating	℃	-15 ~ +24	-15 ~ +24	-15 ~ +24	-15 ~ +24

(*1) Refrigerant leakage contributes to climate change. Refrigerant with lower global warming potential (GWP) would contribute less to global warming than a refrigerant with higher GWP, if leaked to the atmosphere. This appliance contains a refrigerant fluid with a GWP equal to 550. This means that if 1 kg of this refrigerant fluid would be leaked to the atmosphere, the impact on global warming would be 550 times higher than 1 kg of CO_2, over a period of 100 years. Never try to interfere with the refrigerant circuit yourself or disassemble the product yourself and always ask a professional.
The GWP of R32 is 675 in the IPCC 4th Assessment Report.
(*2) Energy consumption based on standard test results. Actual energy consumption will depend on how the appliance is used and where it is located.
(*3) SHi: Super High
(*4) SEER, SCOP and other related description are based on COMMISSION DELEGATED REGULATION (EU) No.626/2011. The temperature conditions for calculating SCOP are based on "Average Season".
(*5) Please see page 51-52 for heating (warmer season) specifications.

MSZ-HR SERIES

Compact, high-performance indoor and outdoor units with R32 that is low global warming potential compared with the current refrigerant R410A contribute to room comfort and to prevent global warming.

"Rank A++/A+" Energy Savings Achieved for Entire Range of Series

DC Inverter SEER A++ SCOP A+

All models in the series, from capacity 25 to 71, have achieved the "Rank A++" for SEER and "Rank A+" for SCOP as energy-savings rating, thanks to Mitsubishi Electric's inverter technologies which are adopted to provide automatic adjustment of operation load according to need.

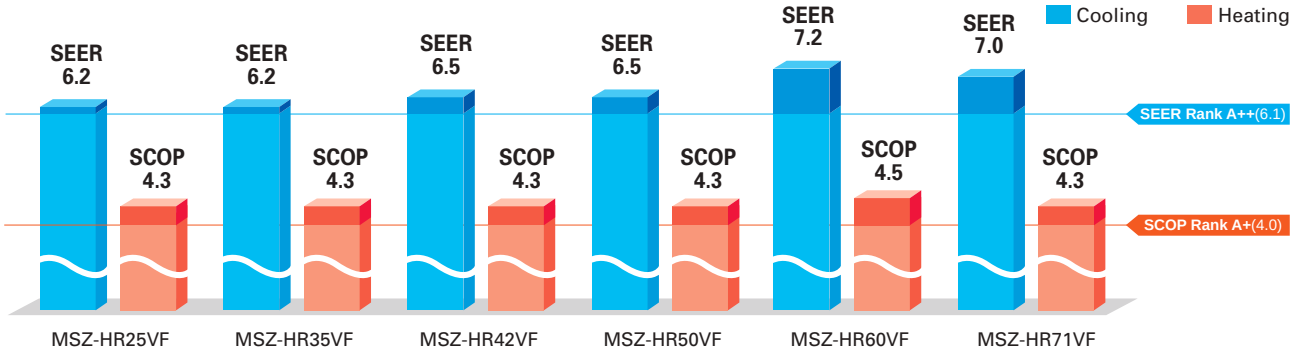

Simple and Friendly Design

The round front surface provides a simple and friendly impression. And the width of indoor unit is compact, making installation in smaller, tighter spaces possible.

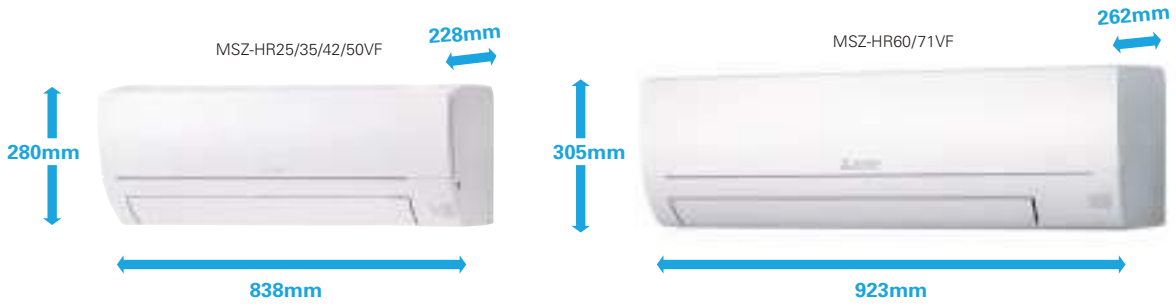

Wi-Fi and System Control

Wi-Fi Interface (Optional)
Optional interface enabling users to control air conditioners and check operating status via devices such as personal computers, tablets and smartphones.

System Control Interface (Optional)
- Remote on/off operation is possible by input to the connector.
- Depending on the interface used, connecting a wired remote-control such as the PAR-40MAA is possible.
- Centralised control is possible when connected to M-NET.

*Wi-Fi Interface and System Control Interface cannot be used simultaneously.

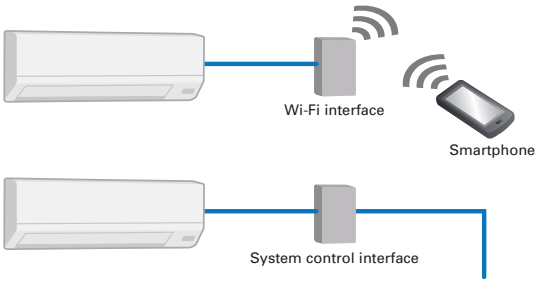

MSZ-HR SERIES

DC Inverter | Joint Lap | DC Fan Motor | PAM | Grooved Piping | SEER A++ | SCOP A+

Indoor Unit

MSZ-HR25/35/42/50VF

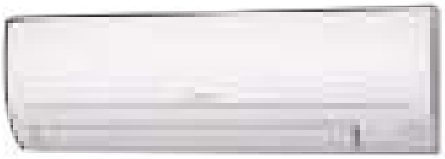

MSZ-HR60/71VF

Outdoor Unit

MUZ-HR25VF

MUZ-HR35VF

MUZ-HR42/50VF

MUZ-HR60/71VF

Remote Controller

Econo Cool | Natural White | AUTO VANE | Silver-ion (Optional) | SWING | AUTO | Auto Restart | Low Temp Cooling | (Optional) | Centralised On/Off (Optional) | Group Control (Optional) | Wi-Fi Interface (Optional) | MXZ connection (MXZ-DM only) | Cleaning-free pipe route | Flare connection | Self Diagnosis | Failure Recall

Type				Inverter Heat Pump					
Indoor Unit				MSZ-HR25VF	MSZ-HR35VF	MSZ-HR42VF	MSZ-HR50VF	MSZ-HR60VF	MSZ-HR71VF
Outdoor Unit				MUZ-HR25VF	MUZ-HR35VF	MUZ-HR42VF	MUZ-HR50VF	MUZ-HR60VF	MUZ-HR71VF
Refrigerant				R32(*1)					
Power Supply	Source			Outdoor Power supply					
	Outdoor (V / Phase / Hz)			230V/Single/50Hz					
Cooling	Design load		kW	2.5	3.4	4.2	5.0	6.1	7.1
	Annual electricity consumption (*2)		kWh/a	141	191	226	269	296	355
	SEER (*4)			6.2	6.2	6.5	6.5	7.2	7.0
		Energy efficiency class		A++	A++	A++	A++	A++	A++
	Capacity	Rated	kW	2.5	3.4	4.2	5.0	6.1	7.1
		Min-Max	kW	0.5-2.9	0.9-3.4	1.1-4.6	1.3-5.0	1.7-7.1	1.8-7.3
	Total Input	Rated	kW	0.800	1.210	1.340	2.050	1.810	2.330
Heating (Average Season)(*5)	Design load		kW	1.9 (-10ºC)	2.4 (-10ºC)	2.9 (-10ºC)	3.8 (-10ºC)	4.6 (-10ºC)	5.4 (-10ºC)
	Declared Capacity	at reference design temperature	kW	1.9 (-10ºC)	2.4 (-10ºC)	2.9 (-10ºC)	3.8 (-10ºC)	4.6 (-10ºC)	5.4 (-10ºC)
		at bivalent temperature	kW	1.9 (-10ºC)	2.4 (-10ºC)	2.9 (-10ºC)	3.8 (-10ºC)	4.6 (-10ºC)	5.4 (-10ºC)
		at operation limit temperature	kW	1.9 (-10ºC)	2.4 (-10ºC)	2.9 (-10ºC)	3.8 (-10ºC)	4.6 (-10ºC)	5.4 (-10ºC)
	Back up heating capacity		kW	0.0 (-10ºC)	0.0 (-10ºC)	0.0 (-10ºC)	0.0 (-10ºC)	0.0 (-10ºC)	0.0 (-10ºC)
	Annual electricity consumption (*2)		kWh/a	614	781	928	1224	1430	1755
	SCOP (*4)			4.3	4.3	4.3	4.3	4.5	4.3
		Energy efficiency class		A+	A+	A+	A+	A+	A+
	Capacity	Rated	kW	3.15	3.6	4.7	5.4	6.8	8.1
		Min-Max	kW	0.7-3.5	0.9-3.7	0.9-5.4	1.4-6.5	1.5-8.5	1.5-9.0
	Total Input	Rated	kW	0.850	0.975	1.300	1.550	1.810	2.440
Operating Current (Max)			A	5.0	6.7	8.5	10.0	14.1	14.1
Indoor Unit	Input	Rated	kW	0.020	0.028	0.032	0.039	0.055	0.055
	Operating Current(Max)		A	0.2	0.27	0.3	0.36	0.5	0.5
	Dimensions	H*W*D	mm	280-838-228	280-838-228	280-838-228	280-838-228	305-923-262	305-923-262
	Weight		kg	8.5	8.5	9	9	12.5	12.5
	Air Volume (Lo-Mid-Hi-SHi(*3)(Dry/Wet))	Cooling	m^3/min	3.6 - 5.4 - 7.2 - 9.7	3.6 - 5.6 - 7.8 - 11.7	6.0 - 8.7 - 10.8 - 13.1	6.4 - 9.2 - 11.2 - 13.1	10.4 - 12.6 - 15.4 - 19.6	10.4 - 12.6 - 15.4 - 19.6
		Heating	m^3/min	3.3 - 5.4 - 7.4 - 10.1	3.3 - 5.4 - 7.4 - 10.5	5.6 - 7.9 - 10.8 - 13.4	6.1 - 8.3 - 11.2 - 14.5	10.7 - 13.1 - 16.7 - 19.6	10.7 - 13.1 - 16.7 - 19.6
	Sound Level (SPL) (Lo-Mid-Hi-SHi(*3))	Cooling	dB(A)	21 - 30 - 37 - 43	22 - 31 - 38 - 46	24 - 34 - 39 - 45	28 - 36 - 40 - 45	33 - 38 - 44 - 50	33 - 38 - 44 - 50
		Heating	dB(A)	21 - 30 - 37 - 43	21 - 30 - 37 - 44	24 - 32 - 40 - 46	27 - 34 - 41 - 47	33 - 38 - 44 - 50	33 - 38 - 44 - 50
	Sound Level (PWL)	Cooling	dB(A)	57	60	60	60	65	65
Outdoor Unit	Dimensions	H*W*D	mm	538-699-249	538-699-249	550-800-285	550-800-285	714-800-285	714-800-285
	Weight		kg	23	24	34	35	40	40
	Air Volume	Cooling	m^3/min	30.3	32.2	30.4	30.4	42.8	42.8
		Heating	m^3/min	30.3	32.2	32.7	32.7	48.3	48.3
	Sound Level (SPL)	Cooling	dB(A)	50	51	50	50	53	53
		Heating	dB(A)	50	51	51	51	57	57
	Sound Level (PWL)	Cooling	dB(A)	63	64	64	64	65	66
	Operating Current (Max)		A	4.8	6.4	8.2	9.6	13.6	13.6
	Breaker Size		A	10	10	10	12	16	16
Ext. Piping	Diameter	Liquid/Gas	mm	6.35 / 9.52	6.35 / 9.52	6.35 / 9.52	6.35 / 9.52	6.35 / 12.7	6.35 / 12.7
	Max.Length	Out-In	m	20	20	20	20	30	30
	Max.Height	Out-In	m	12	12	12	12	15	15
Guaranteed Operating Range (Outdoor)		Cooling	℃	-10 ~ +46	-10 ~ +46	-10 ~ +46	-10 ~ +46	-10 ~ +46	-10 ~ +46
		Heating	℃	-10 ~ +24	-10 ~ +24	-10 ~ +24	-10 ~ +24	-10 ~ +24	-10 ~ +24

(*1) Refrigerant leakage contributes to climate change. Refrigerant with lower global warming potential (GWP) would contribute less to global warming than a refrigerant with higher GWP, if leaked to the atmosphere. This appliance contains a refrigerant fluid with a GWP equal to 550. This means that if 1 kg of this refrigerant fluid would be leaked to the atmosphere, the impact on global warming would be 550 times higher than 1 kg of CO_2, over a period of 100 years. Never try to interfere with the refrigerant circuit yourself or disassemble the product yourself and always ask a professional.
The GWP of R32 is 675 in the IPCC 4th Assessment Report.
(*2) Energy consumption based on standard test results. Actual energy consumption will depend on how the appliance is used and where it is located.
(*3) SHi: Super High
(*4) SEER, SCOP and other related description are based on COMMISSION DELEGATED REGULATION (EU) No.626/2011. The temperature conditions for calculating SCOP are based on "Average Season".
(*5) Please see page 51-52 for heating (warmer season) specifications.

MSY–TP SERIES

MSY-TP35/50VF

Cooling only model with high-perfomance provide high SHF in various environments thanks to wide operation range.

High Energy-Saving Performance with High SHF

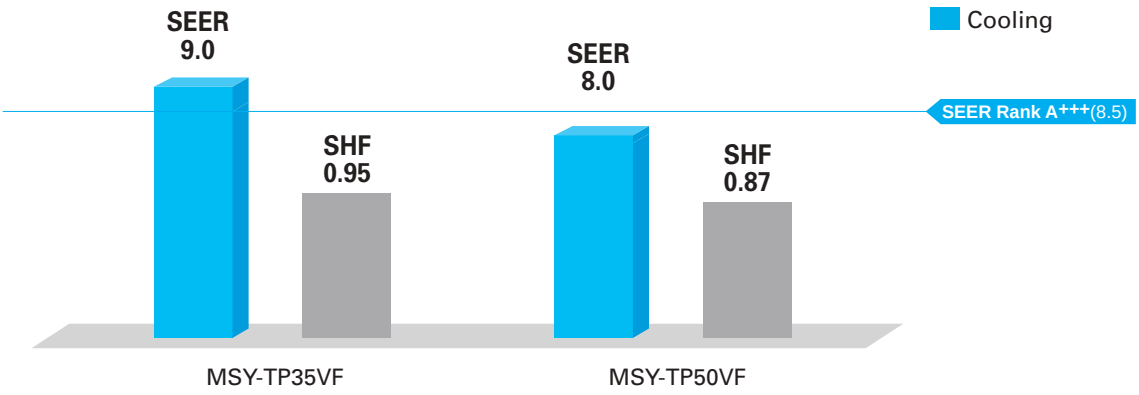

Wide Cooling Operating Range

As a result of an extended operating range in cooling, these models accommodate a wide range of usage environments and applications.

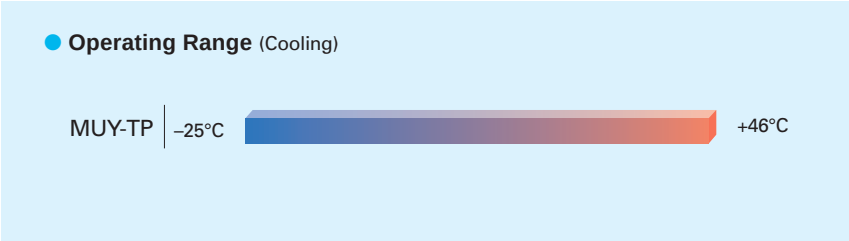

MSY-TP SERIES

DC Inverter | Joint Lap | DC Fan Motor | PAM | Grooved Piping | 35 SEER A+++

Indoor Unit

MSY-TP35/50VF

Outdoor Unit

MUY-TP35/TP50VF

Remote Controller

- Wired remote controller can be connected to indoor unit.

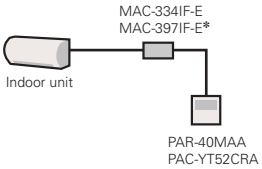

* When using MAC-397IF-E with PAR-40MAA, brightness needs to be set as low.

Pure White | AUTO VANE | Silver-ion (Optional) | SWING | AUTO | Auto Restart | Cleaning-free pipe route | Flare connection | Self Diagnosis | Failure Recall

Type				Inverter Heat Pump	
Indoor Unit				MSY-TP35VF	MSY-TP50VF
Outdoor Unit				MUY-TP35VF	MUY-TP50VF
Refrigerant				R32 (*1)	
Power Supply	Source			Indoor Power supply	
	Outdoor (V / Phase / Hz)			230V / Single / 50Hz	
Cooling	Design load		kW	3.5	5.0
	Annual electricity consumption (*2)		kWh/a	136	218
	SEER (*4)			9.0	8.0
		Energy efficiency class		A+++	A++
	Capacity	Rated	kW	3.5	5.0
		Min-Max	kW	1.5 - 4.0	1.5 - 5.7
	Total Input	Rated	kW	0.760	1.450
Heating (Average Season)(*5)	Design load		kW	-	-
	Declared Capacity	at reference design temperature	kW	-	-
		at bivalent temperature	kW	-	-
		at operation limit temperature	kW	-	-
	Back up heating capacity		kW	-	-
	Annual electricity consumption (*2)		kWh/a	-	-
	SCOP (*4)			-	-
		Energy efficiency class		-	-
	Capacity	Rated	kW	-	-
		Min-Max	kW	-	-
	Total Input	Rated	kW	-	-
Operating Current (Max)			A	9.6	9.6
Indoor Unit	Input	Rated	kW	0.033	0.034
	Operating Current (Max)		A	0.4	0.4
	Dimensions	H*W*D	mm	305-923-250	305-923-250
	Weight		kg	12.5	12.5
	Air Volume (Lo-Mid-Hi-SHi(*3)(Dry/Wet))	Cooling	m^3/min	10.1 - 11.6 - 13.7 - 16.4	10.1 - 11.6 - 13.7 - 16.4
		Heating	m^3/min	-	-
	Sound Level (SPL) (Lo-Mid-Hi-SHi(*3))	Cooling	dB(A)	31 - 36 - 40 - 45	31 - 36 - 40 - 45
		Heating	dB(A)	-	-
	Sound Level (PWL)	Cooling	dB(A)	60	60
	Breaker Size		A	10	10
Outdoor Unit	Dimensions	H*W*D	mm	550-800-285	550-800-285
	Weight		kg	34	34
	Air Volume	Cooling	m^3/min	29.3	29.3
		Heating	m^3/min	-	-
	Sound Level (SPL)	Cooling	dB(A)	45	47
		Heating	dB(A)	-	-
	Sound Level (PWL)	Cooling	dB(A)	58	61
	Operating Current (Max)		A	9.2	9.2
Ext. Piping	Diameter	Liquid/Gas	mm	6.35/9.52	6.35/9.52
	Max.Length	Out-In	m	20	20
	Max.Height	Out-In	m	12	12
Guaranteed Operating Range (Outdoor)		Cooling	℃	-25 ~ +46	-25 ~ +46
		Heating	℃	-	-

(*1) Refrigerant leakage contributes to climate change. Refrigerant with lower global warming potential (GWP) would contribute less to global warming than a refrigerant with higher GWP, if leaked to the atmosphere. This appliance contains a refrigerant fluid with a GWP equal to 550. This means that if 1 kg of this refrigerant fluid would be leaked to the atmosphere, the impact on global warming would be 550 times higher than 1 kg of CO_2, over a period of 100 years. Never try to interfere with the refrigerant circuit yourself or disassemble the product yourself and always ask a professional.
The GWP of R32 is 675 in the IPCC 4th Assessment Report.
(*2) Energy consumption based on standard test results. Actual energy consumption will depend on how the appliance is used and where it is located.
(*3) SHi: Super High
(*4) SEER and other related description are based on COMMISSION DELEGATED REGULATION (EU) No.626/2011.

MSZ-S SERIES
MSZ-G SERIES

Introducing a compact and stylish indoor unit with amazingly quiet performance. Not only are neat installations in small bedrooms possible, increase energy-savings by selecting the optimal capacity required for each room.

"Rank A++/A+" Energy Savings Achieved for Entire Range of Series

DC Inverter | 25-71 SEER A++ | 25-71 SCOP A+

All models in the series, from the low-capacity 25 to the high-capacity 71, have achieved the "Rank A++" for SEER and "Rank A+" for SCOP as energy-savings rating. For home use, such as in bedrooms and living rooms, to light commercial use, such as in offices, our air conditioners are contributing to reduced energy consumption in a wide range.

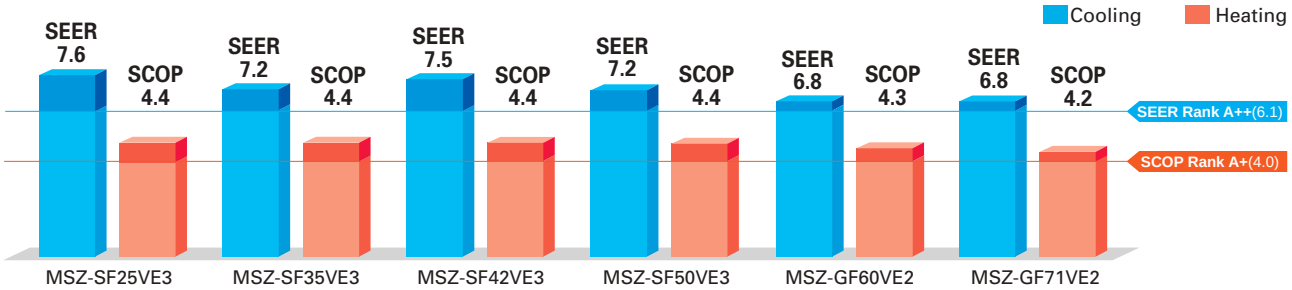

Wide Line-up

Eight different indoor units (Model 15-71) are available to meet your diversified air conditioning needs.

GOOD DESIGN AWARD 2014

MSZ-SF15 / 20VA*
*for MXZ connection

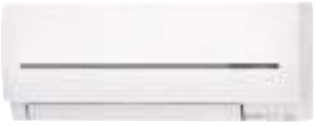

MSZ-SF25 / 35 / 42 / 50VE3

MSZ-GF60 / 71VE2

Compact and Stylish

(MSZ-SF15/20VA)

The stylish, square indoor unit adds a touch of class to any room interior. The compact design is 64mm thinner than our previous indoor unit with the lowest output capacity (MSZ-GE22VA).

Comparison with our previous model GE

Family Design

(MSZ-SF15/20/25/35/42/50)

Models in the 25-50 class are introduced as single-split units while retaining the popular design of the SF15/20VA* as indoor units exclusively for multi-systems. From small rooms to living rooms, it is possible to coordinate residences with a unified design.
*Size may vary.

"Weekly Timer"

Easily set desired temperatures and operation start/stop times to match lifestyle patterns. Reduce wasted energy consumption by using the timer to prevent forgetting to turn off the unit and eliminate temperature setting adjustments.

■ Example Operation Pattern (Winter/Heating mode)

	Mon.	Tues.	Wed.	Thurs.	Fri.	Sat.	Sun.
6:00	ON 20°C	ON 20°C	ON 20°C	ON 20°C	ON 20°C	ON 20°C	ON 20°C
8:00	Automatically changes to high-power operation at wake-up time						
10:00	OFF	OFF	OFF	OFF	OFF	ON 18°C	ON 18°C
12:00	Automatically turned off during work hours					Midday is warmer, so the temperature is set lower	
14:00							
16:00							
18:00	ON 20°C	ON 20°C	ON 20°C	ON 20°C	ON 20°C	ON 20°C	ON 20°C
20:00	Automatically turns on, synchronized with arrival at home					Automatically raises temperature setting to match time when outside-air temperature is low	
22:00							
(during sleeping hours)	ON 18°C	ON 18°C	ON 18°C	ON 18°C	ON 18°C	ON 18°C	ON 18°C
	Automatically lowers temperature at bedtime for energy-saving operation at night						

Settings

Pattern Settings: Input up to four settings for each day

Settings: •Start/Stop operation •Temperature setting ✻The operation mode cannot be set.

■ Easy set-up using dedicated buttons

The remote controller is equipped with buttons that are used exclusively for setting the Weekly Timer. Setting operation patterns is easy and quick.

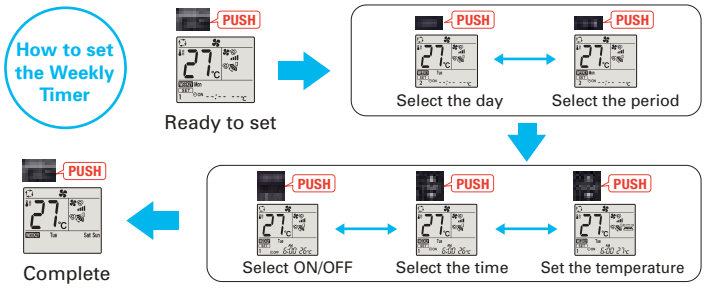

- Start by pushing the "SET" button and follow the instructions to set the desired patterns. Once all of the desired patterns are input, point the top end of the remote controller at the indoor unit and push the "SET" button one more time. (Push the "SET" button only after inputting all of the desired patterns into the remote controller memory. Pushing the "CANCEL" button will end the set-up process without sending the operation patterns to the indoor unit).
- It takes a few seconds to transmit the Weekly Timer operation patterns to the indoor unit. Please continue to point the remote controller at the indoor unit until all data has been sent.
- When "Weekly Timer" is set, temperature can not be set 10°C.

Low Standby Power

Electrical devices consume standby power even when they are not in actual use. While we obviously strive to reduce power consumption during actual use, reducing this wasted power that cannot be seen is also very important.

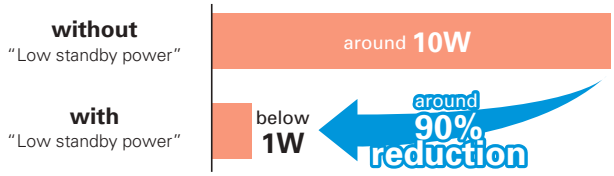

Air Purifying Filter (MSZ-SF25/35/42/50,MSZ-GF60/71)

This filter generates stable antibacterial and deodourising effects. The size of the three-dimensional surface has been increased as well, enlarging the filter capture area. These features give the Air Purifying Filter better dust collection performance than conventional filters. The superior air-cleaning effectiveness raises room comfort yet another level.

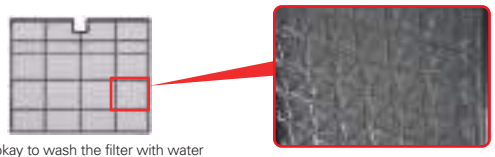

✻ It is okay to wash the filter with water (air-cleaning effect is maintained)

3D surface (Waved surface)

"i save" Mode

"i save" is a simplified setting function that recalls the preferred (preset) temperature by pressing a single button on the remote controller. Press the same button twice in repetition to immediately return to the previous temperature setting. Using this function contributes to comfortable, waste-free operation, realising the most suitable air conditioning settings and saving on power consumption when, for example, leaving the room or going to bed.

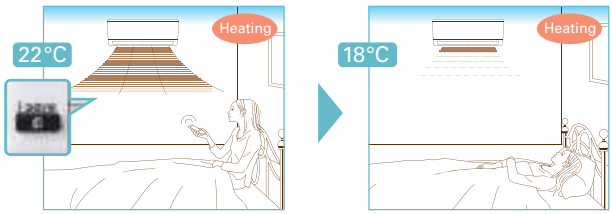

✻ Temperature can be preset to 10°C when heating in the "i-save" mode.

Outdoor Units for Cold Region (25/35/42/50)

Single split-type outdoor units are available in both standard and heater-equipped units. An electric heater is installed in each unit to prevent freezing in cold outdoor environments.

MSZ-S SERIES

DC Inverter

Indoor Unit

R410A

MSZ-SF15/20VA

GOOD DESIGN AWARD 2014

Outdoor Unit

For MXZ Connection Only

Remote Controller

Econo Cool | Pure White | AUTO VANE | SWING | AUTO | Weekly Timer | i save | ACO | Auto Restart | Optional | Group Control (Optional) | M-NET connection (Optional) | Wi-Fi Interface (Optional) | MXZ connection | Flare connection | Self Diagnosis | Failure Recall

Type				Inverter Heat Pump					
Indoor Unit				MSZ-SF15VA	MSZ-SF20VA	MSZ-SF25VE3	MSZ-SF25VE3	MSZ-SF35VE3	MSZ-SF35VE3
Outdoor Unit				for MXZ connection		MUZ-SF25VE	MUZ-SF25VEH	MUZ-SF35VE	MUZ-SF35VEH
Refrigerant				R410A(*1)					
Power Supply	Source			Outdoor Power supply					
	Outdoor (V / Phase / Hz)			230/Single/50					
Cooling	Design load		kW	-	-	2.5	2.5	3.5	3.5
	Annual electricity consumption (*2)		kWh/a	-	-	116	116	171	171
	SEER (*4)			-	-	7.6	7.6	7.2	7.2
		Energy efficiency class		-	-	A++	A++	A++	A++
	Capacity	Rated	kW	-	-	2.5	2.5	3.5	3.5
		Min-Max	kW	-	-	0.9-3.4	0.9-3.4	1.1-3.8	1.1-3.8
	Total Input	Rated	kW	-	-	0.600	0.600	1.080	1.080
Heating (Average Season)(*5)	Design load		kW	-	-	2.4(-10°C)	2.4(-10°C)	2.9(-10°C)	2.9(-10°C)
	Declared Capacity	at reference design temperature	kW	-	-	2.4(-10°C)	2.4(-10°C)	2.9(-10°C)	2.9(-10°C)
		at bivalent temperature	kW	-	-	2.4(-10°C)	2.4(-10°C)	2.9(-10°C)	2.9(-10°C)
		at operation limit temperature	kW	-	-	2.0(-15°C)	1.6(-20°C)	2.2(-15°C)	1.6(-20°C)
	Back up heating capacity		kW	-	-	0.0(-10°C)	0.0(-10°C)	0.0(-10°C)	0.0(-10°C)
	Annual electricity consumption (*2)		kWh/a	-	-	764	790	923	948
	SCOP (*4)			-	-	4.4	4.3	4.4	4.3
		Energy efficiency class		-	-	A+	A+	A+	A+
	Capacity	Rated	kW	-	-	3.2	3.2	4.0	4.0
		Min-Max	kW	-	-	1.0-4.1	1.0-4.1	1.3-4.6	1.3-4.6
	Total Input	Rated	kW	-	-	0.780	0.780	1.030	1.030
Operating Current (Max)			A	-	-	8.4	8.4	8.5	8.5
Indoor Unit	Input	Rated	kW	0.017	0.019	0.024	0.024	0.027	0.027
	Operating Current(Max)		A	0.17	0.19	0.2	0.2	0.3	0.3
	Dimensions	H*W*D	mm	250-760-168	250-760-168	299-798-195	299-798-195	299-798-195	299-798-195
	Weight		kg	7.7	7.7	10	10	10	10
	Air Volume (SLo-Lo-Mid-Hi-SHi(*3))(Dry/Wet)	Cooling	m^3/min	3.5 - 3.9 - 4.6 - 5.5 - 6.4	3.5 - 3.9 - 4.6 - 5.5 - 6.9	3.2 - 4.1 - 5.6 - 7.2 - 9.1	3.2 - 4.1 - 5.6 - 7.2 - 9.1	3.2 - 4.1 - 5.6 - 7.2 - 9.1	3.2 - 4.1 - 5.6 - 7.2 - 9.1
		Heating	m^3/min	3.7 - 4.4 - 5.0 - 6.0 - 6.8	3.7 - 4.4 - 5.0 - 6.0 - 7.3	3.0 - 4.1 - 6.7 - 8.2 - 10.3	3.0 - 4.1 - 6.7 - 8.2 - 10.3	3.0 - 4.1 - 6.7 - 8.3 - 11.0	3.0 - 4.1 - 6.7 - 8.3 - 11.0
	Sound Level (SPL) (SLo-Lo-Mid-Hi-SHi(*3))	Cooling	dB(A)	21 - 26 - 30 - 35 - 40	21 - 26 - 30 - 35 - 42	19(*6) - 24 - 30 - 36 - 42	19(*6) - 24 - 30 - 36 - 42	19(*6) - 24 - 30 - 36 - 42	19(*6) - 24 - 30 - 36 - 42
		Heating	dB(A)	21 - 26 - 30 - 35 - 40	21 - 26 - 30 - 35 - 42	19(*6) - 24 - 34 - 39 - 45	19(*6) - 24 - 34 - 39 - 45	19(*6) - 24 - 34 - 40 - 46	19(*6) - 24 - 34 - 40 - 46
	Sound Level (PWL)	Cooling	dB(A)	59	60	57	57	57	57
Outdoor Unit	Dimensions	H*W*D	mm	-	-	550-800-285	550-800-285	550-800-285	550-800-285
	Weight		kg	-	-	31	31	31	31
	Air Volume	Cooling	m^3/min	-	-	31.1	31.1	35.9	35.9
		Heating	m^3/min	-	-	30.7	30.7	35.9	35.9
	Sound Level (SPL)	Cooling	dB(A)	-	-	47	47	49	49
		Heating	dB(A)	-	-	48	48	50	50
	Sound Level (PWL)	Cooling	dB(A)	-	-	58	58	62	62
	Operating Current (Max)		A	-	-	8.2	8.2	8.2	8.2
	Breaker Size		A	-	-	10	10	10	10
Ext. Piping	Diameter	Liquid/Gas	mm	6.35/9.52	6.35/9.52	6.35 / 9.52	6.35 / 9.52	6.35 / 9.52	6.35 / 9.52
	Max.Length	Out-In	m	-	-	20	20	20	20
	Max.Height	Out-In	m	-	-	12	12	12	12
Guaranteed Operating Range (Outdoor)		Cooling	℃	-	-	-10 ~ +46	-10 ~ +46	-10 ~ +46	-10 ~ +46
		Heating	℃	-	-	-15 ~ +24	-20 ~ +24	-15 ~ +24	-20 ~ +24

(*1) Refrigerant leakage contributes to climate change. Refrigerant with lower global warming potential (GWP) would contribute less to global warming than a refrigerant with higher GWP, if leaked to the atmosphere. This appliance contains a refrigerant fluid with a GWP equal to 1975. This means that if 1 kg of this refrigerant fluid would be leaked to the atmosphere, the impact on global warming would be 1975 times higher than 1 kg of CO_2, over a period of 100 years. Never try to interfere with the refrigerant circuit yourself or disassemble the product yourself and always ask a professional.
The GWP of R410A is 2088 in the IPCC 4th Assessment Report.
(*2) Energy consumption based on standard test results. Actual energy consumption will depend on how the appliance is used and where it is located.
(*3) SHi: Super High
(*4) SEER, SCOP and other related description are based on COMMISSION DELEGATED REGULATION (EU) No.626/2011. The temperature conditions for calculating SCOP are based on "Average Season".
(*5) Please see page 51-52 for heating (warmer season) specifications.
(*6) For single use: only 19dB(A). For multi use (MXZ): 21dB(A).

MSZ-S SERIES
MSZ-G SERIES

DC Inverter | Joint Lap | DC Fan Motor | PAM | Grooved Piping | SEER A++ | SCOP A+

Indoor Unit R410A

MSZ-SF25/35/42/50VE3

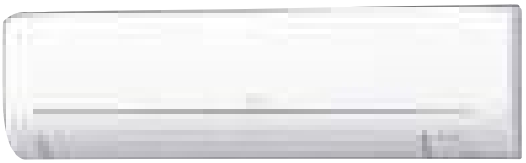

MSZ-GF60/71VE2

Outdoor Unit R410A

MUZ-SF25/35/42VE(H)

MUZ-SF50VE(H)
MUZ-GF60/71VE

Remote Controller

Econo Cool | Pure White | AUTO VANE | Silver-ion (Optional) | Air Purifying | SWING | SWING | AUTO | WIDE&LONG | Weekly Timer | i save | ACO | Auto Restart | Low Temp Cooling (Optional)

Group Control (Optional) | M-NET connection (Optional) | Wi-Fi Interface (Optional) | MXZ connection | Cleaning-free, pipe reuse | Flare connection | Self Diagnosis | Failure Recall

Type				Inverter Heat Pump					
Indoor Unit				MSZ-SF42VE3	MSZ-SF42VE3	MSZ-SF50VE3	MSZ-SF50VE3	MSZ-GF60VE2	MSZ-GF71VE2
Outdoor Unit				MUZ-SF42VE	MUZ-SF42VEH	MUZ-SF50VE	MUZ-SF50VEH	MUZ-GF60VE	MUZ-GF71VE
Refrigerant				R410A(*1)					
Power Supply	Source			Outdoor Power supply					
	Outdoor (V / Phase / Hz)			230/Single/50					
Cooling	Design load		kW	4.2	4.2	5.0	5.0	6.1	7.1
	Annual electricity consumption (*2)		kWh/a	196	196	246	246	311	364
	SEER (*4)			7.5	7.5	7.2	7.2	6.8	6.8
		Energy efficiency class		A++	A++	A++	A++	A++	A++
	Capacity	Rated	kW	4.2	4.2	5.0	5.0	6.1	7.1
		Min-Max	kW	0.8-4.5	0.8-4.5	1.4-5.4	1.4-5.4	1.4-7.5	2.0-8.7
	Total Input	Rated	kW	1.340	1.340	1.660	1.660	1.790	2.130
Heating (Average Season)(*5)	Design load		kW	3.8 (-10°C)	3.8 (-10°C)	4.2 (-10°C)	4.2 (-10°C)	4.6 (-10°C)	6.7 (-10°C)
	Declared Capacity	at reference design temperature	kW	3.8 (-10°C)	3.8 (-10°C)	4.2 (-10°C)	4.2 (-10°C)	4.6 (-10°C)	6.7 (-10°C)
		at bivalent temperature	kW	3.8 (-10°C)	3.8 (-10°C)	4.2 (-10°C)	4.2 (-10°C)	4.6 (-10°C)	6.7 (-10°C)
		at operation limit temperature	kW	3.4 (-15°C)	2.2 (-20°C)	3.4 (-15°C)	2.3 (-20°C)	3.7 (-15°C)	5.4 (-15°C)
	Back up heating capacity		kW	0.0 (-10°C)	0.0 (-10°C)	0.0 (-10°C)	0.0 (-10°C)	0.0 (-10°C)	0.0 (-10°C)
	Annual electricity consumption (*2)		kWh/a	1215	1242	1351	1380	1489	2204
	SCOP (*4)			4.4	4.3	4.4	4.3	4.3	4.2
		Energy efficiency class		A+	A+	A+	A+	A+	A+
	Capacity	Rated	kW	5.4	5.4	5.8	5.8	6.8	8.1
		Min-Max	kW	1.3-6.0	1.3-6.0	1.4-7.3	1.4-7.3	2.0-9.3	2.2-9.9
	Total Input	Rated	kW	1.580	1.580	1.700	1.700	1.810	2.230
Operating Current (Max)			A	9.5	9.5	12.3	12.3	14.5	16.6
Indoor Unit	Input	Rated	kW	0.027	0.027	0.035	0.035	0.062	0.058
	Operating Current(Max)		A	0.3	0.3	0.3	0.3	0.5	0.5
	Dimensions	H*W*D	mm	299-798-195	299-798-195	299-798-195	299-798-195	325-1100-238	325-1100-238
	Weight		kg	10	10	10	10	16	16
	Air Volume (SLo-Lo-Mid-Hi-SHi(*3))(Dry/Wet)	Cooling	m^3/min	4.7 - 5.8 - 6.7 - 7.9 - 9.1	4.7 - 5.8 - 6.7 - 7.9 - 9.1	5.1 - 6.2 - 7.0 - 8.2 - 9.9	5.1 - 6.2 - 7.0 - 8.2 - 9.9	9.8-11.3-13.4-15.6-18.3	9.7-11.5-13.3-15.4-17.8
		Heating	m^3/min	4.7 - 5.8 - 7.2 - 9.1 - 11.4	4.7 - 5.8 - 7.2 - 9.1 - 11.4	5.1 - 6.4 - 8.0 - 9.8 - 12.0	5.1 - 6.4 - 8.0 - 9.8 - 12.0	9.8-11.3-13.4-15.6-18.3	10.2-11.5-13.3-15.4-17.8
	Sound Level (SPL) (SLo-Lo-Mid-Hi-SHi(*3))	Cooling	dB(A)	26(*6) - 31 - 34 - 38 - 42	26(*6) - 31 - 34 - 38 - 42	28(*7) - 33 - 36 - 40 - 45	28(*7) - 33 - 36 - 40 - 45	29 - 37 -41 - 45 - 49	30 - 37 - 41 - 45 - 49
		Heating	dB(A)	26(*6) - 31 - 36 - 42 - 47	26(*6) - 31 - 36 - 42 - 47	28(*7) - 33 - 38 - 43 - 49	28(*7) - 33 - 38 - 43 - 49	29 - 37 - 41 - 45 - 49	30 - 37 - 41 - 45 - 49
	Sound Level (PWL)	Cooling	dB(A)	57	57	58	58	65	65
Outdoor Unit	Dimensions	H*W*D	mm	550-800-285	550-800-285	880-840-330	880-840-330	880-840-330	880-840-330
	Weight		kg	35	35	55	55	50	53
	Air Volume	Cooling	m^3/min	35.2	35.2	44.6	44.6	49.2	50.1
		Heating	m^3/min	33.6	33.6	44.6	44.6	49.2	48.2
	Sound Level (SPL)	Cooling	dB(A)	50	50	52	52	55	55
		Heating	dB(A)	51	51	52	52	55	55
	Sound Level (PWL)	Cooling	dB(A)	63	63	65	65	65	65
	Operating Current (Max)		A	9.2	9.2	12	12	14	16.1
	Breaker Size		A	10	10	16	16	20	20
Ext. Piping	Diameter	Liquid/Gas	mm	6.35 / 9.52	6.35 / 9.52	6.35 / 12.7	6.35 / 12.7	6.35/15.88	9.52/15.88
	Max.Length	Out-In	m	20	20	30	30	30	30
	Max.Height	Out-In	m	12	12	15	15	15	15
Guaranteed Operating Range (Outdoor)		Cooling	℃	-10 ~ +46	-10 ~ +46	-10 ~ +46	-10 ~ +46	-10 ~ +46	-10 ~ +46
		Heating	℃	-15 ~ +24	-20 ~ +24	-15 ~ +24	-20 ~ +24	-15 ~ +24	-15 ~ +24

(*1) Refrigerant leakage contributes to climate change. Refrigerant with lower global warming potential (GWP) would contribute less to global warming than a refrigerant with higher GWP, if leaked to the atmosphere. This appliance contains a refrigerant fluid with a GWP equal to 1975. This means that if 1 kg of this refrigerant fluid would be leaked to the atmosphere, the impact on global warming would be 1975 times higher than 1 kg of CO_2, over a period of 100 years. Never try to interfere with the refrigerant circuit yourself or disassemble the product yourself and always ask a professional.
The GWP of R410A is 2088 in the IPCC 4th Assessment Report.
(*2) Energy consumption based on standard test results. Actual energy consumption will depend on how the appliance is used and where it is located.
(*3) SHi: Super High
(*4) SEER, SCOP and other related description are based on COMMISSION DELEGATED REGULATION (EU) No.626/2011. The temperature conditions for calculating SCOP are based on "Average Season".
(*5) Please see page 51-52 for heating (warmer season) specifications.
(*6) For single use: only 26dB(A), For multi use (MXZ): 28dB(A).
(*7) For single use: only 28dB(A), For multi use (MXZ): 30dB(A).

R410A

MSZ-DM25/35VA

MSZ-D SERIES

Compact, high-performance indoor and outdoor units equipped with high-performance air purifying filters contribute to greater room comfort. Wi-Fi and system controller connectivity enable enhanced expandability.

Advanced Inverter Control – Efficient Operation All the Time

DC Inverter | 25/35 SEER A+ | 25/35 SCOP A+

Mitsubishi Electric's cutting-edge inverter technologies are adopted to provide automatic adjustment of operation load according to need. This reduces excessive consumption of electricity, and thereby realises an Energy Rank "A+".

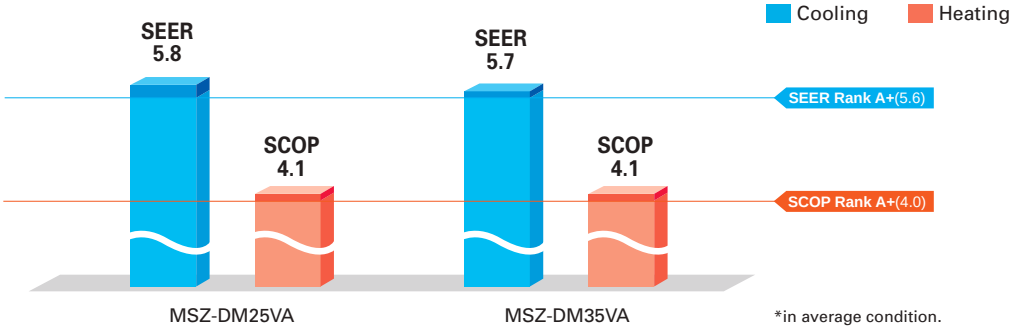

*in average condition.

Wider Cooling Operating Range

As a result of an extended operating range in cooling, these models accommodate a wider range of usage environments and applications than previous models.

Wi-Fi and System Control

Wi-Fi Interface (Optional)
Optional interface enabling users to control air conditioners and check operating status via devices such as personal computers, tablets and smartphones.

System Control Interface (Optional)
- Remote on/off operation is possible by input to the connector.
- Depending on the interface used, connecting a wired remote-control such as the PAR-40MAA is possible.
- Centralised control is possible when connected to M-NET.

*Wi-Fi Interface and System Control Interface cannot be used simultaneously.

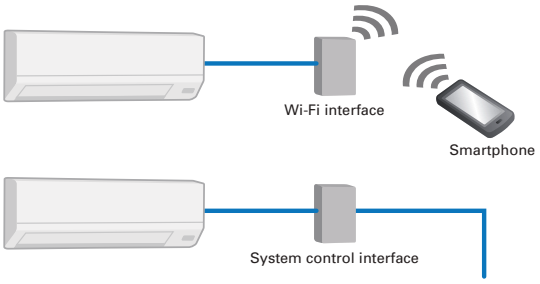

Silver-ionized Air Purifier Filter

The high performance filter is attached as standard. Captures the bacteria, pollen and other allergens in the air and neutralises them.

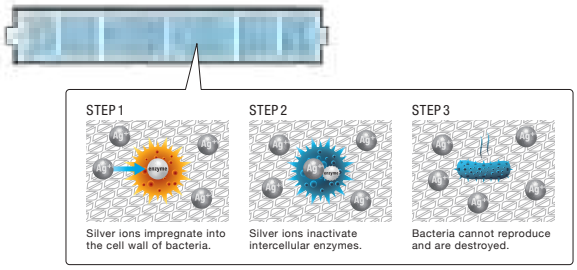

Compact Units

The width of both indoor and outdoor units are compact, making installation in smaller, tighter spaces possible.

Indoor Unit: MSZ-DM25VA

Only 799mm width

Outdoor Unit: MUZ-DM25/35VA

Only 699mm width

MSZ-D SERIES

DC Inverter | Joint Lap | DC Fan Motor | PAM | Grooved Piping | SEER A+ | SCOP A+

Indoor Unit R410A

MSZ-DM25/35VA

Outdoor Unit R410A

MUZ-DM25/35VA

Remote Controller

Econo Cool | Pure White | AUTO VANE | Silver-ion | SWING | AUTO | Auto Restart | Low Temp Cooling | Optional | Centralised On/Off Optional | Group Control Optional | Wi-Fi Interface Optional | MXZ connection MXZ-DM only | Cleaning-free pipe route | Flare connection | Self Diagnosis | Failure Recall

Type				Inverter Heat Pump	
Indoor Unit				MSZ-DM25VA	MSZ-DM35VA
Outdoor Unit				MUZ-DM25VA	MUZ-DM35VA
Refrigerant				R410A(*1)	
Power Supply	Source			Indoor Power supply	
	Outdoor (V / Phase / Hz)			230V/Single/50Hz	
Cooling	Design load		kW	2.5	3.1
	Annual electricity consumption (*2)		kWh/a	149	190
	SEER (*4)			5.8	5.7
		Energy efficiency class		A+	A+
	Capacity	Rated	kW	2.5	3.15
		Min-Max	kW	1.3 - 3.0	1.4 - 3.5
	Total Input	Rated	kW	0.710	1.020
Heating (Average Season)(*5)	Design load		kW	1.9 (-10ºC)	2.4 (-10ºC)
	Declared Capacity	at reference design temperature	kW	1.9 (-10ºC)	2.4 (-10ºC)
		at bivalent temperature	kW	1.9 (-10ºC)	2.4 (-10ºC)
		at operation limit temperature	kW	1.9 (-10ºC)	2.4 (-10ºC)
	Back up heating capacity		kW	0.0 (-10ºC)	0.0 (-10ºC)
	Annual electricity consumption (*2)		kWh/a	647	809
	SCOP (*4)			4.1	4.1
		Energy efficiency class		A+	A+
	Capacity	Rated	kW	3.15	3.6
		Min-Max	kW	0.9 - 3.5	1.1 - 4.1
	Total Input	Rated	kW	0.850	0.975
Operating Current (Max)			A	5.8	6.5
Indoor Unit	Input	Rated	kW	0.020	0.024
	Operating Current(Max)		A	0.3	0.3
	Dimensions	H*W*D	mm	290-799-232	290-799-232
	Weight		kg	9	9
	Air Volume (SLo-Lo-Mid-Hi-SHi(*3))(Dry/Wet))	Cooling	m^3/min	3.8 - 5.5 - 7.3 - 9.5	3.8 - 5.7 - 7.8 - 10.9
		Heating	m^3/min	3.5 - 5.5 - 7.5 - 10.0	3.5 - 5.5 - 7.5 - 10.3
	Sound Level (SPL) (SLo-Lo-Mid-Hi-SHi(*3))	Cooling	dB(A)	22 - 30 - 37 - 43	22 - 31 - 38 - 45
		Heating	dB(A)	23 - 30 - 37 - 43	23 - 30 - 37 - 44
	Sound Level (PWL)	Cooling	dB(A)	57	60
Outdoor Unit	Dimensions	H*W*D	mm	538-699-249	538-699-249
	Weight		kg	24	25
	Air Volume	Cooling	m^3/min	31.5	31.5
		Heating	m^3/min	31.5	31.5
	Sound Level (SPL)	Cooling	dB(A)	50	51
		Heating	dB(A)	50	51
	Sound Level (PWL)	Cooling	dB(A)	63	64
	Operating Current (Max)		A	5.5	6.2
	Breaker Size		A	10	10
Ext. Piping	Diameter	Liquid/Gas	mm	6.35/9.52	6.35/9.52
	Max.Length	Out-In	m	20	20
	Max.Height	Out-In	m	12	12
Guaranteed Operating Range (Outdoor)		Cooling	℃	-10 ~ +46	-10 ~ +46
		Heating	℃	-10 ~ +24	-10 ~ +24

(*1) Refrigerant leakage contributes to climate change. Refrigerant with lower global warming potential (GWP) would contribute less to global warming than a refrigerant with higher GWP, if leaked to the atmosphere. This appliance contains a refrigerant fluid with a GWP equal to 1975. This means that if 1 kg of this refrigerant fluid would be leaked to the atmosphere, the impact on global warming would be 1975 times higher than 1 kg of CO_2, over a period of 100 years. Never try to interfere with the refrigerant circuit yourself or disassemble the product yourself and always ask a professional.
The GWP of R410A is 2088 in the IPCC 4th Assessment Report.
(*2) Energy consumption based on standard test results. Actual energy consumption will depend on how the appliance is used and where it is located.
(*3) SHi: Super High
(*4) SEER, SCOP and other related description are based on COMMISSION DELEGATED REGULATION (EU) No.626/2011. The temperature conditions for calculating SCOP are based on "Average Season".
(*5) Please see page 51-52 for heating (warmer season) specifications.

R410A

MSZ-HJ25/35/50VA

MSZ-HJ60/71VA

MSZ-H SERIES

Compact, high-performance indoor and outdoor units and advanced inverter technologies provide superior energy savings and comfort in all rooms.

Stylish Design with Flat Panel Front

A stylish flat panel design is employed for the front of the indoor unit. The simple look matches room aesthetics.

Advanced Inverter Control – Efficient Operation All the Time

DC Inverter

25/35 SEER	25/35 SCOP	50/60/71 SEER	50/60/71 SCOP
A	A	A+	A+

Mitsubishi Electric's cutting-edge inverter technologies are adopted to provide automatic adjustment of operation load according to need. This reduces excessive consumption of electricity, and thereby realises an Energy Rank "A" rating for 25/35 classes and "A+" for 50/60/71 classes.

Silent Operation

Quiet, relaxing space is within reach. Operational noise is a low 22dB (25/35 classes). Operation is so silent you might even forget the air conditioner is on.

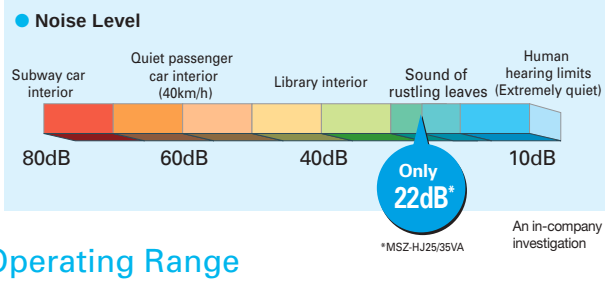

Long Piping Length

Compared to previous models, the piping length is significantly increased, further enhancing the ease and flexibility of installation.

	MSZ-HJ60/71	MSZ-HJ25/35/50	MSZ-HC
Max piping length	30m	20m	10m
Max piping height difference	15m	12m	5m

Operating Range

As a result of an extended operating range in cooling, these models accommodate a wider range of usage environments and applications than previous models.

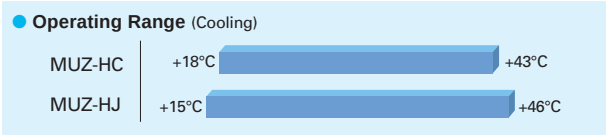

Compact Units

The widths of both indoor and outdoor units are compact, making installation in smaller, tighter spaces possible.

Indoor Unit: MSZ-HJ25/35/50VA

Only 799mm width

Outdoor Unit: MUZ-HJ25/35VA

Only 699mm width

Compared to other models, width is down by 16%.

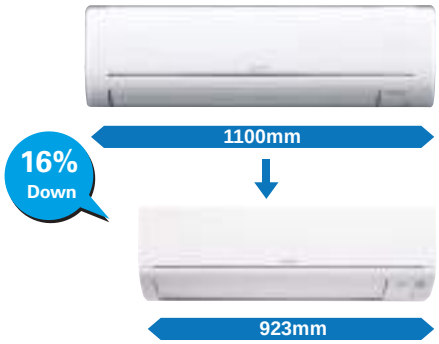

MSZ-H SERIES

DC Inverter | Joint Lap | 50/60/71 DC Fan Motor | PAM | Grooved Piping | 50/60/71 SEER A+ | 50/60/71 SCOP A+

Indoor Unit R410A

MSZ-HJ25/35/50VA

MSZ-HJ60/71VA

Outdoor Unit R410A

MUZ-HJ25/35VA

MUZ-HJ50VA

MUZ-HJ60/71VA

Remote Controller

Econo Cool | Pure White | AUTO VANE | Silver-ion (Optional) | SWING | AUTO | Auto Restart | Cleaning-free pipe resin | Flare connection | Self Diagnosis | Failure Recall | MXZ connection (25 / 35 / 50 MXZ-DM only)

Type				Inverter Heat Pump				
Indoor Unit				MSZ-HJ25VA	MSZ-HJ35VA	MSZ-HJ50VA	MSZ-HJ60VA	MSZ-HJ71VA
Outdoor Unit				MUZ-HJ25VA	MUZ-HJ35VA	MUZ-HJ50VA	MUZ-HJ60VA	MUZ-HJ71VA
Refrigerant				R410A(*1)				
Power Supply	Source			Indoor Power supply				
	Outdoor (V / Phase / Hz)			230V/Single/50Hz				
Cooling	Design load		kW	2.5	3.1	5.0	6.1	7.1
	Annual electricity consumption (*2)		kWh/a	171	212	292	354	441
	SEER (*4)			5.1	5.1	6.0	6.0	5.6
		Energy efficiency class		A	A	A+	A+	A+
	Capacity	Rated	kW	2.5	3.15	5.0	6.1	7.1
		Min-Max	kW	1.3 - 3.0	1.4 - 3.5	1.3 - 5.0	1.7 - 7.1	1.8 - 7.1
	Total Input	Rated	kW	0.730	1.040	2.050	1.900	2.330
Heating (Average Season)(*5)	Design load		kW	1.9 (-10ºC)	2.4 (-10ºC)	3.8 (-10ºC)	4.6 (-10ºC)	5.4 (-10ºC)
	Declared Capacity	at reference design temperature	kW	1.9 (-10ºC)	2.4 (-10ºC)	3.8 (-10ºC)	4.6 (-10ºC)	5.4 (-10ºC)
		at bivalent temperature	kW	1.9 (-10ºC)	2.4 (-10ºC)	3.8 (-10ºC)	4.6 (-10ºC)	5.4 (-10ºC)
		at operation limit temperature	kW	1.9 (-10ºC)	2.4 (-10ºC)	3.8 (-10ºC)	4.6 (-10ºC)	5.4 (-10ºC)
	Back up heating capacity		kW	0.0 (-10ºC)	0.0 (-10ºC)	0.0 (-10ºC)	0.0 (-10ºC)	0.0 (-10ºC)
	Annual electricity consumption (*2)		kWh/a	698	885	1267	1544	1854
	SCOP (*4)			3.8	3.8	4.2	4.1	4.0
		Energy efficiency class		A	A	A+	A+	A+
	Capacity	Rated	kW	3.15	3.6	5.4	6.8	8.1
		Min-Max	kW	0.9 - 3.5	1.1 - 4.1	1.4 - 6.5	1.5 - 8.4	1.5 - 8.5
	Total Input	Rated	kW	0.870	0.995	1.480	1.970	2.440
Operating Current (Max)			A	5.8	6.5	9.8	12.5	12.5
Indoor Unit	Input	Rated	kW	0.020	0.024	0.037	0.055	0.055
	Operating Current(Max)		A	0.3	0.3	0.4	0.5	0.5
	Dimensions	H*W*D	mm	290-799-232	290-799-232	290-799-232	305-923-250	305-923-250
	Weight		kg	9	9	9	13	13
	Air Volume (SLo-Lo-Mid-Hi-SHi(*3))(Dry/Wet))	Cooling	m^3/min	3.8 - 5.5 - 7.3 - 9.5	3.8 - 5.7 - 7.8 - 10.9	6.3 - 9.1 - 11.1 - 12.9	9.3 - 12.2 - 15.0 - 19.9	10.0 - 12.2 - 15.0 - 19.9
		Heating	m^3/min	3.5 - 5.5 - 7.5 - 10.0	3.5 - 5.5 - 7.5 - 10.3	6.1 - 8.3 - 11.1 - 14.3	9.4 - 12.5 - 16.0 - 19.9	10.3 - 12.7 - 16.4 - 19.9
	Sound Level (SPL) (SLo-Lo-Mid-Hi-SHi(*3))	Cooling	dB(A)	22 - 30 - 37 - 43	22 - 31 - 38 - 45	28 - 36 - 40 - 45	31 - 38 - 44 - 50	33 - 38 - 44 - 50
		Heating	dB(A)	23 - 30 - 37 - 43	23 - 30 - 37 - 44	27 - 34 - 41 - 47	31 - 38 - 44 - 49	33 - 38 - 44 - 49
	Sound Level (PWL)	Cooling	dB(A)	57	60	60	65	65
Outdoor Unit	Dimensions	H*W*D	mm	538-699-249	538-699-249	550-800-285	880-840-330	880-840-330
	Weight		kg	24	25	36	55	55
	Air Volume	Cooling	m^3/min	31.5	31.5	36.3	47.9	49.3
		Heating	m^3/min	31.5	31.5	34.8	47.9	47.9
	Sound Level (SPL)	Cooling	dB(A)	50	50	50	55	55
		Heating	dB(A)	50	50	51	55	55
	Sound Level (PWL)	Cooling	dB(A)	63	64	64	65	66
	Operating Current (Max)		A	5.5	6.2	9.4	12.0	12.0
	Breaker Size		A	10	10	12	16	16
Ext. Piping	Diameter	Liquid/Gas	mm	6.35/9.52	6.35/9.52	6.35/12.7	6.35/15.88	9.52/15.88
	Max.Length	Out-In	m	20	20	20	30	30
	Max.Height	Out-In	m	12	12	12	15	15
Guaranteed Operating Range (Outdoor)		Cooling	℃	+15 ~ +46	+15 ~ +46	+15 ~ +46	+15 ~ +46	+15 ~ +46
		Heating	℃	-10 ~ +24	-10 ~ +24	-10 ~ +24	-10 ~ +24	-10 ~ +24

(*1) Refrigerant leakage contributes to climate change. Refrigerant with lower global warming potential (GWP) would contribute less to global warming than a refrigerant with higher GWP, if leaked to the atmosphere. This appliance contains a refrigerant fluid with a GWP equal to 1975. This means that if 1 kg of this refrigerant fluid would be leaked to the atmosphere, the impact on global warming would be 1975 times higher than 1 kg of CO_2, over a period of 100 years. Never try to interfere with the refrigerant circuit yourself or disassemble the product yourself and always ask a professional.
The GWP of R410A is 2088 in the IPCC 4th Assessment Report.
(*2) Energy consumption based on standard test results. Actual energy consumption will depend on how the appliance is used and where it is located.
(*3) SHi: Super High
(*4) SEER, SCOP and other related description are based on COMMISSION DELEGATED REGULATION (EU) No.626/2011. The temperature conditions for calculating SCOP are based on "Average Season".
(*5) Please see page 51-52 for heating (warmer season) specifications.

MFZ SERIES

High Capacity, Energy Savings and a Design in Harmony with Living Spaces
Raise the Value of Your Room to the Next Level.

MFZ-KT25/35/50/60VG

GOOD DESIGN AWARD 2014

Simple, Flat Design

Uneven surfaces have been smoothed to provide a simple design with linear beauty, harmonised with all types of interiors.

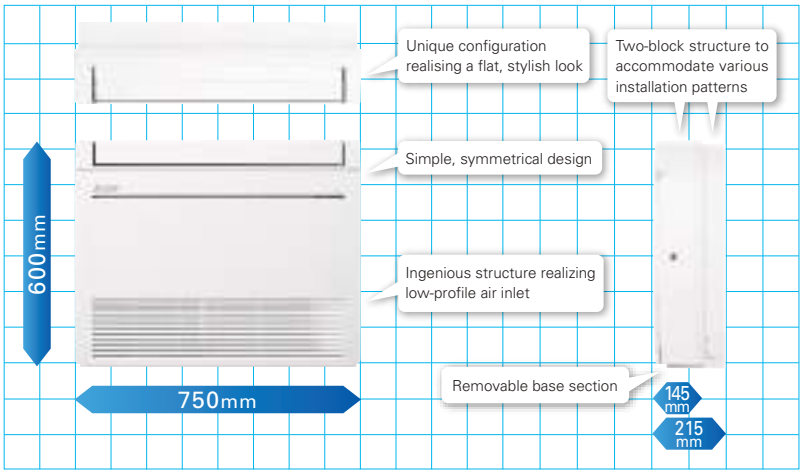

Images of installed unit

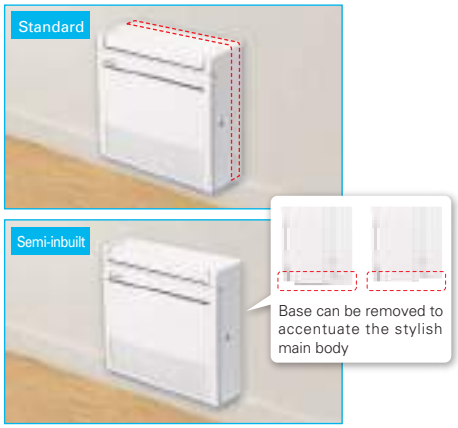

New Line-up

New models have been introduced to expand the line-up. The diverse selection enables the best solution for both customers and locations.

Capacity	2.5kW	3.5kW	5.0kW	6.0kW
MFZ-KJ	✓	✓	✓	
↓				
MFZ-KT	✓	✓	✓	✓

Multi-flow Vane

Three uniquely shaped vanes control the airflow and allow the freedom to customize comfort according to preferences.

When heating

Rapid heating

Warm air is blown out in a downward direction and then sucked back into the unit to quickly raise the temperature of the air being blown out.

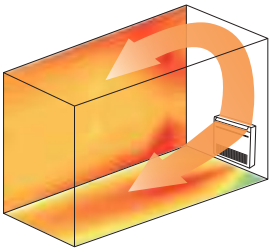

When cooling

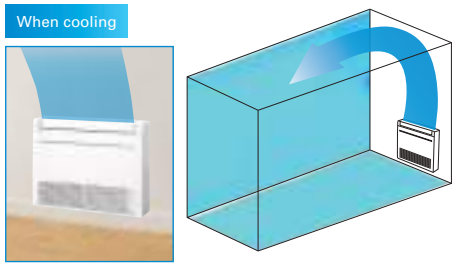

*The downward airflow is also possible as well as heating.

Weekly Timer (Introduced in response to market demand)

Temperature settings and On/Off control can be managed over a period of one week using the Weekly Timer. Up to eight setting patterns per calendar day are possible.

Silver-ionized Air Purifier Filter

The high performance filter is attached as standard. Captures the bacteria, pollen and other allergens in the air and neutralises them.

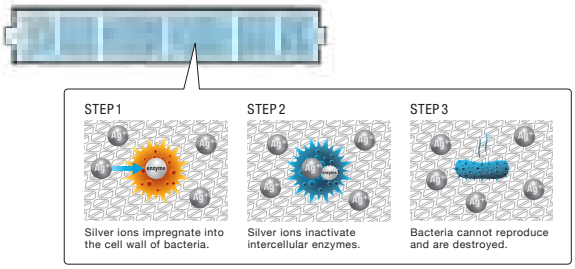

Quiet Operation

The indoor unit noise level is as low as 19dB for MFZ Series, offering a peaceful inside environment.

*Single connection only.

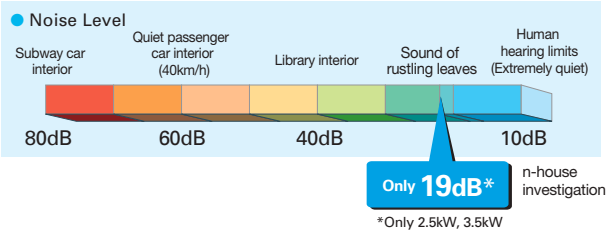

MFZ-KT SERIES

DC Inverter | DC Fan Motor | PAM | Grooved Piping | SEER A++ | SCOP A+

Indoor Unit

GOOD DESIGN AWARD 2014

MFZ-KT25/35/50/60VG

Outdoor Unit

SUZ-M25/35VA

SUZ-M50VA

SUZ-M60VA

Remote Controller

Enclosed in MFZ-KT

*optional

*optional

*optional

Econo Cool | Pure White | AUTO VANE | Silver-ion | Air Purifying | SWING | AUTO | Weekly Timer | i save | ACO | Auto Restart | Low Temp Cooling | Optional | Group Control (Optional) | M-NET connection (Optional) | Wi-Fi Interface (Optional) | MXZ connection | Cleaning-free, pipe reuse | Flare connection | Self Diagnosis | Failure Recall

Type				Inverter Heat Pump			
Indoor Unit				MFZ-KT25VG	MFZ-KT35VG	MFZ-KT50VG	MFZ-KT60VG
Outdoor Unit				SUZ-M25VA	SUZ-M35VA	SUZ-M50VA	SUZ-M60VA
Refrigerant				R32(*1)	R32(*1)	R32(*1)	R32(*1)
Power Supply	Source			Outdoor power supply			
	Outdoor(V/Phase/Hz)			230 / Single / 50			
Cooling	Design load		kW	2.5	3.5	5.0	6.1
	Annual electricity consumption (*2)		kWh/a	134	185	257	343
	SEER (*4), (*5)			6.5	6.6	6.8	6.2
		Energy efficiency class		A++	A++	A++	A++
	Capacity	Rated	kW	2.5	3.5	5.0	6.1
		Min-Max	kW	1.6 - 3.2	0.9 - 3.9	1.2 - 5.6	1.7 - 6.3
	Total Input	Rated	kW	0.62	1.06	1.55	1.84
Heating (Average Season)	Design load		kW	2.2	2.6	4.3	4.6
	Declared Capacity	at reference design temperature	kW	2.0 (-10℃)	2.3 (-10℃)	3.5 (-10℃)	4.1 (-10℃)
		at bivalent temperature	kW	2.0 (-7℃)	2.3 (-7℃)	3.9 (-7℃)	4.1 (-7℃)
		at operation limit temperature	kW	2.0 (-10℃)	2.3 (-10℃)	3.5 (-10℃)	4.1 (-10℃)
	Back up heating capacity		kW	0.2	0.3	0.8	0.5
	Annual electricity consumption (*2)		kWh/a	732	825	1423	1568
	SCOP (*4), (*5)			4.2	4.4	4.2	4.1
		Energy efficiency class		A+	A+	A+	A+
	Capacity	Rated	kW	3.4	4.3	6.0	7.0
		Min-Max	kW	1.3 - 4.2	1.1 - 5.0	1.5 - 7.2	1.6 - 8.0
	Total Input	Rated	kW	0.91	1.26	1.86	2.18
Operating Current (Max)			A	7.0	8.7	14.0	15.4
Indoor Unit	Input	Rated	kW	0.020 / 0.024	0.020 / 0.024	0.037 / 0.052	0.063 / 0.059
	Operating Current(Max)		A	0.20	0.20	0.45	0.55
	Dimensions	H*W*D	mm	600-750-215	600-750-215	600-750-215	600-750-215
	Weight		kg	14.5	14.5	14.5	15.0
	Air Volume	Cooling	m3/min	3.9 - 4.8 - 6.5 - 7.8 - 8.9	3.9 - 4.8 - 6.5 - 7.8 - 8.9	5.6 - 6.7 - 8.6 - 10.4 - 12.3	5.6 - 8.0 - 9.6 - 12.3 - 15.0
	(SLo-Lo-Mid-Hi-SHi (*3))	Heating	m3/min	3.5 - 4.0 - 5.6 - 7.3 - 9.7	3.5 - 4.0 - 5.6 - 7.3 - 9.7	6.0 - 7.7 - 9.4 - 11.6 - 14.0	6.0 - 7.7 - 9.7 - 12.5 - 14.6
	Sound Level (SPL)	Cooling	dB(A)	19 - 24 - 31 - 37 - 41	19 - 24 - 31 - 37 - 41	28 - 32 - 37 - 42 - 48	28 - 36 - 40 - 46 - 53
	(SLo-Lo-Mid-Hi-SHi (*3))	Heating	dB(A)	19 - 23 - 30 - 37 - 44	19 - 23 - 30 - 37 - 44	29 - 35 - 40 - 44 - 49	29 - 35 - 41 - 47 - 51
	Sound Level (PWL)	Cooling	dB(A)	54	54	60	65
Outdoor Unit	Dimensions	H*W*D	mm	550-800-285	550-800-285	714-800-285	880-840-300
	Weight		kg	30	35	41	54
	Air Volume	Cooling	m3/min	36.3	34.3	45.8	50.1
		Heating	m3/min	34.6	32.7	43.7	50.1
	Sound Level (SPL)	Cooling	dB(A)	45	48	48	49
		Heating	dB(A)	46	48	49	51
	Sound Level (PWL)	Cooling	dB(A)	59	59	64	65
	Operating Current(Max)		A	7	9	14	15
	Breaker Size		A	10	10	16	16
Ext. Piping	Diameter	Liquid/Gas	mm	6.35 / 9.52	6.35 / 9.52	6.35 / 12.7	6.35 / 15.88
	Max.Length	Out-In	m	20	20	30	30
	Max.Height	Out-In	m	12	12	30	30
Guaranteed Operating Range [Outdoor]		Cooling	℃	-10 ~ +46	-10 ~ +46	-15 ~ +46	-15 ~ +46
		Heating	℃	-10 ~ +24	-10 ~ +24	-10 ~ +24	-10 ~ +24

(*1) Refrigerant leakage contributes to climate change. Refrigerant with lower global warming potential (GWP) would contribute less to global warming than a refrigerant with higher GWP, if leaked to the atmosphere. This appliance contains a refrigerant fluid with a GWP equal to 1975. This means that if 1 kg of this refrigerant fluid would be leaked to the atmosphere, the impact on global warming would be 1975 times higher than 1 kg of CO_2, over a period of 100 years. Never try to interfere with the refrigerant circuit yourself or disassemble the product yourself and always ask a professional.
The GWP of R410A is 2088 in the IPCC 4th Assessment Report.
(*2) Energy consumption based on standard test results. Actual energy consumption will depend on how the appliance is used and where it is located.
(*3) SHi: Super High
(*4) SEER, SCOP and other related description are based on COMMISSION DELEGATED REGULATION (EU) No.626/2011. The temperature conditions for calculating SCOP are based on "Average Season".
(*5) SEER and SCOP are based on 2009/125/EC:Energy-related Products Directive and Regulation(EU) No206/2012.

MLZ SERIES

Introducing a new type of ceiling cassette for the Multi-Split Series with streamed interior dimensions and a sharp, sleek appearance.

R410A
Multi

MLZ-KP25/35/50VF

GOOD DESIGN AWARD 2017

reddot award 2018 winner

Slim Design

Industry leading slim body realized a simple design with linear beauty.

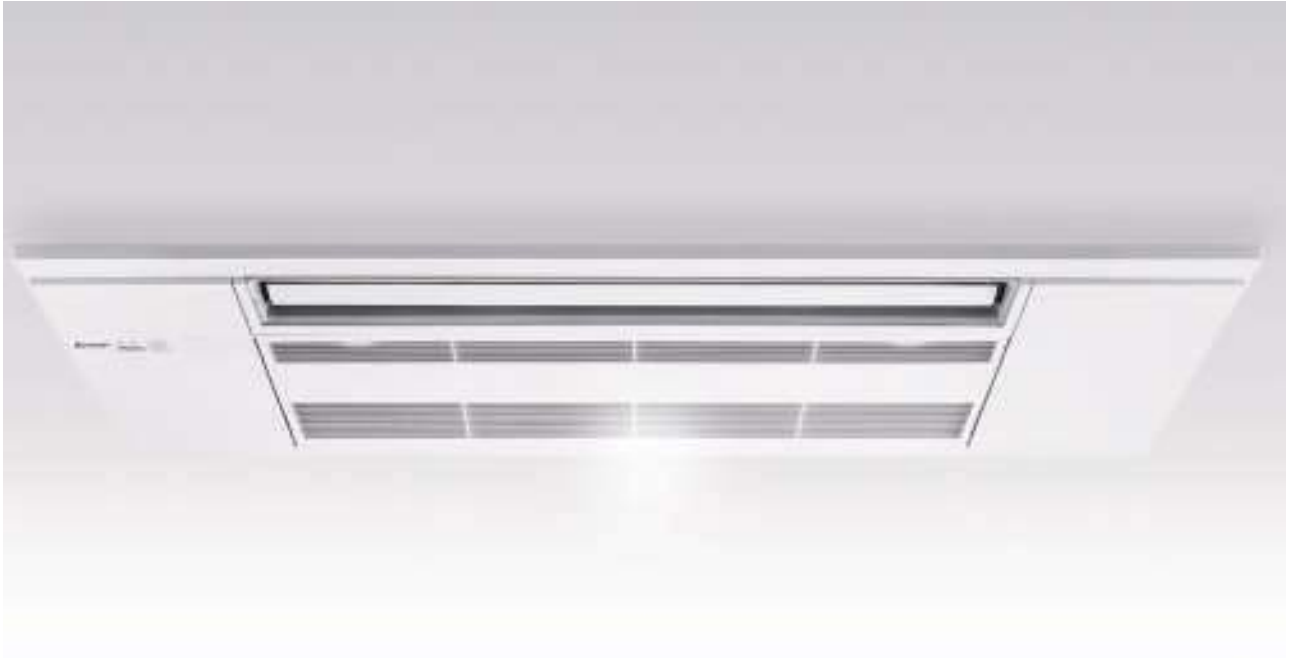

Ceiling Mounted

Installing the ceiling-mounted MLZ Series unit in a room creates a more spacious feel that enhances room comfort. This overhead format is also an excellent solution when lighting equipment is installed at the centre of the room and fixtures such as book shelves are mounted on wall surfaces.

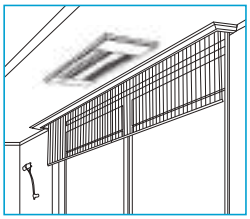

Slim Body

The new units are designed with a slim body (only 185mm high), ensuring easy installation even when low ceiling cavities limit installation space. The need for ceiling cavity service space is also eliminated, further reducing the dimensions required for installation.

Set Airflow According to Ceiling Height

Dual-level airflow selection is engineered to accommodate specific ceiling heights. This is a key feature for adjusting airflow effectively when it is either too strong or too weak due to being mismatched with the height of the ceiling.

	25	35	50
Standard	2.4m	2.4m	2.4m
High ceiling	2.7m	2.7m	2.7m

Auto Vane Control

Outlet vanes can be moved left and right, and up and down using the remote controller. This improved airflow control feature solves the problem of drafts.

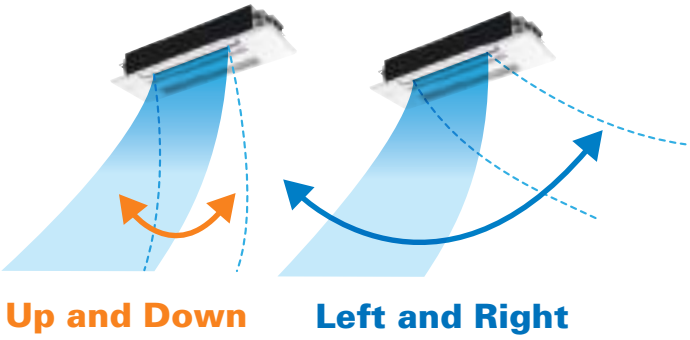

✻Only available when Econo Cool is set.

Horizontal Airflow

The new airflow control completely eliminates that uncomfortable drafty-feeling with the introduction of a horizontal airflow that spreads across the ceiling. The ideal airflow for offices and restaurants.

[Horizontal Airflow]
Model name: MLZ-KP35VF
Ceiling height: 2.4m
Model: Cooling

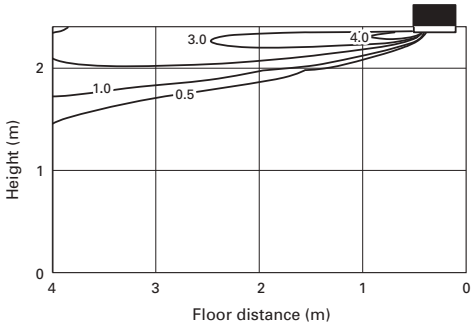

Weekly Timer Built-in Weekly Timer Function

Easily set desired temperatures and operation ON/OFF times to match lifestyle patterns. Reduce wasted energy consumption by using the timer to prevent forgetting to turn off the unit and eliminate temperature setting adjustments.

■ Example Operation Pattern (Winter/Heating mode)

	Mon.	Tues.	Wed.	Thurs.	Fri.	Sat.	Sun.
6:00	ON 20°C	ON 20°C	ON 20°C	ON 20°C	ON 20°C	ON 20°C	ON 20°C
8:00	Automatically changes to high-power operation at wake-up time						
10:00	OFF	OFF	OFF	OFF	OFF	ON 18°C	ON 18°C
12:00	Automatically turned off during work hours					Midday is warmer, so the temperature is set lower	
14:00							
16:00							
18:00	ON 22°C	ON 22°C	ON 22°C	ON 22°C	ON 22°C	ON 22°C	ON 22°C
20:00	Automatically turns on, synchronized with arrival at home					Automatically raises temperature setting to match time when outside-air temperature is low	
22:00							
(during sleeping hours)	ON 18°C	ON 18°C	ON 18°C	ON 18°C	ON 18°C	ON 10°C	ON 10°C
	Automatically lowers temperature at bedtime for energy-saving operation at night						

Settings
Pattern Settings: Input up to four settings for each day
Settings: •Start/Stop operation •Temperature setting ✻The operation mode cannot be set.

■ Easy set-up using dedicated buttons

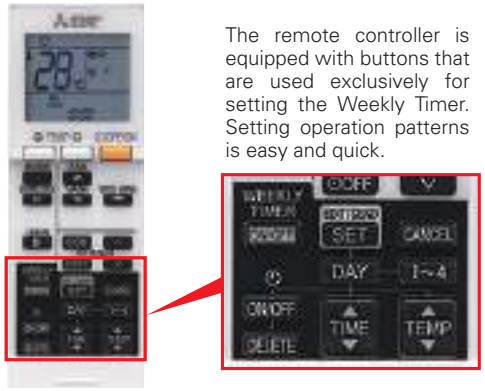

The remote controller is equipped with buttons that are used exclusively for setting the Weekly Timer. Setting operation patterns is easy and quick.

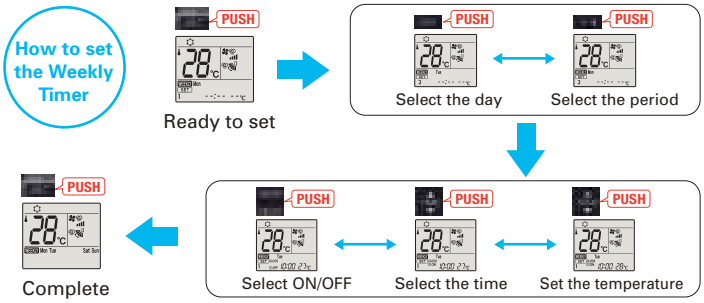

- Start by pushing the "SET" button and follow the instructions to set the desired patterns. Once all of the desired patterns are input, point the top end of the remote controller at the indoor unit and push the "SET" button one more time. (Push the "SET" button only after inputting all of the desired patterns into the remote controller memory. Pushing the "CANCEL" button will end the set-up process without sending the operation patterns to the indoor unit).
- It takes a few seconds to transmit the Weekly Timer operation patterns to the indoor unit. Please continue to point the remote controller at the indoor unit until all data has been sent.

Easy Installation

Industry leading Slim Body

Inovative size which enables to fold the refrigerant piping above the unit.

Dimension: 185(H)×1102(W)×360(D)mm

Temporary hanging hook

Work efficiency has improved during installation.

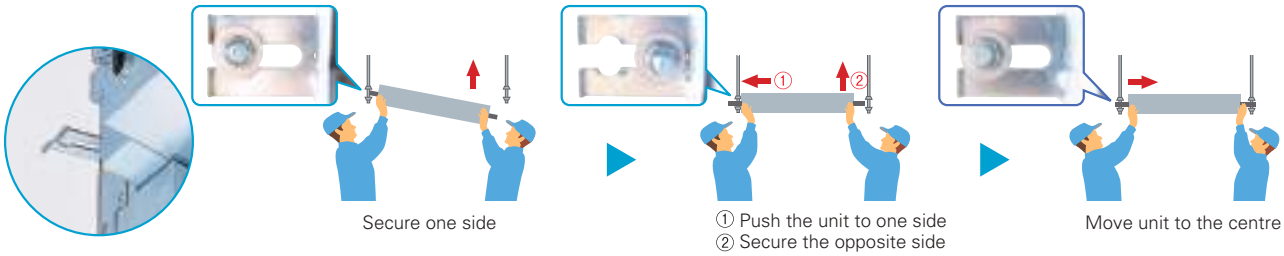

Drain Piping Supporters + Drain Cover

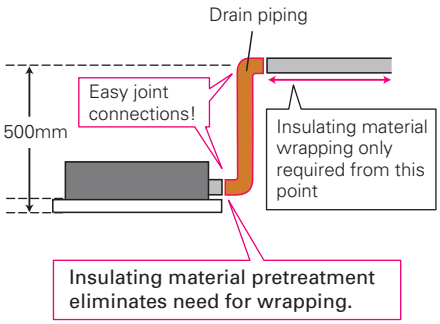

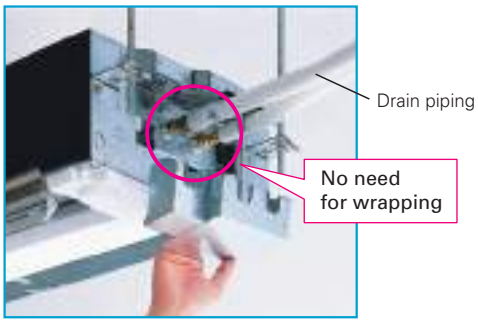

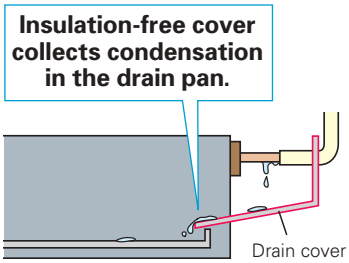

Wi-Fi Interface Installation (Optional)

The indoor unit panel is equipped with a Wi-Fi Interface pocket, contributing to the beautiful appearance, easy installation, and maintenance.

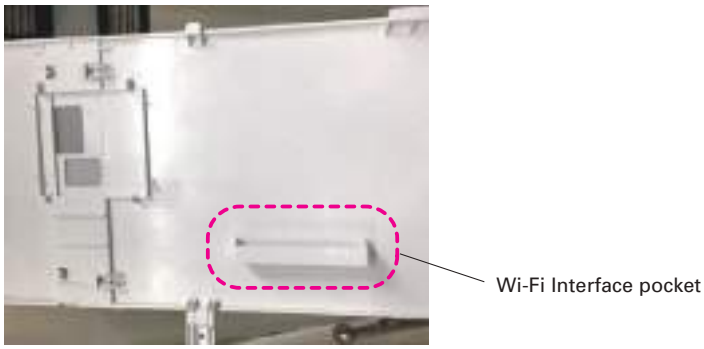

MLZ-KP SERIES

DC Inverter

Indoor Unit

MLZ-KP25/35/50VF

GOOD DESIGN AWARD 2017

Panel

MLP-444W

Outdoor Unit

SUZ-M25/35VA

SUZ-M50VA

Remote Controller

Enclosed in MLZ-KP

*optional

*optional

*optional

Econo Cool | AUTO VANE | Silver-ion (Optional) | Air Purifying | SWING (Optional) | High Ceiling | AUTO | Weekly Timer | ACO | Auto Restart | (Optional) | Group Control (Optional) | M-NET connection (Optional) | Wi-Fi Interface (Optional) | MXZ connection

10°C | Drain Lift Up | Flare connection | Self Diagnosis | Failure Recall

Type				Inverter Heat Pump		
Indoor Unit				MLZ-KP25VF	MLZ-KP35VF	MLZ-KP50VF
Outdoor Unit				SUZ-M25VA	SUZ-M35VA	SUZ-M50VA
Refrigerant				R32(*1)		
Power Supply	Source			Outdoor Power supply		
	Outdoor (V / Phase / Hz)			230V / Single / 50Hz		
Cooling	Design load		kW	2.5	3.5	5.0
	Annual electricity consumption (*2)		kWh/a	141	175	260
	SEER (*4), (*5)			6.2	7.0	6.7
		Energy efficiency class		A++	A++	A++
	Capacity	Rated	kW	2.5	3.5	5.0
		Min-Max	kW	1.4 - 3.2	0.8 - 3.9	1.7 - 5.6
	Total Input	Rated	kW	0.59	0.94	1.38
Heating (Average Season)	Design load		kW	2.2	2.6	4.3
	Declared Capacity	at reference design temperature	kW	2.0 (–10°C)	2.3 (–10°C)	3.8 (–10°C)
		at bivalent temperature	kW	2.0 (–7°C)	2.3 (–7°C)	3.8 (–7°C)
		at operation limit temperature	kW	2.0 (–10°C)	2.3 (–10°C)	3.8 (–10°C)
	Back up heating capacity		kW	0.2	0.3	0.5
	Annual electricity consumption (*2)		kWh/a	697	791	1397
	SCOP (*4), (*5)			4.4	4.6	4.3
		Energy efficiency class		A+	A++	A+
	Capacity	Rated	kW	3.2	4.1	6.0
		Min-Max	kW	1.4 - 4.2	1.1 - 4.9	1.7 - 7.2
	Total Input	Rated	kW	0.80	1.10	1.86
Operating Current (Max)			A	7.2	8.9	13.9
Indoor Unit	Input	Rated	kW	0.04	0.04	0.04
	Operating Current(Max)		A	0.40	0.40	0.40
	Dimensions	H*W*D	mm	185-1102-360	185-1102-360	185-1102-360
	Weight		kg	15.5	15.5	15.5
	Air Volume (SLo-Lo-Mid-Hi(*3))(Dry/Wet))	Cooling	m^3/min	6.0-7.2-8.0-8.8	6.0-7.3-8.4-9.4	6.0-8.3-9.8-11.4
		Heating	m^3/min	6.0-7.0-8.2-9.2	6.0-7.7-8.8-9.9	6.0-8.8-10.3-11.8
	Sound Level (SPL) (SLo-Lo-Mid-Hi(*3))	Cooling	dB(A)	27-31-34-38	27-32-36-40	29-36-41-47
		Heating	dB(A)	26-27-34-37	29-32-36-40	26-37-42-48
	Sound Level (PWL)	Cooling	dB(A)	52	53	59
Panel	Dimensions	H*W*D	mm	24-1200-424	24-1200-424	24-1200-424
	Weight		kg	3.5	3.5	3.5
Outdoor Unit	Dimensions	H*W*D	mm	550-800-285	550-800-285	550-800-285
	Weight		kg	30	35	41
	Air Volume	Cooling	m^3/min	36.3	34.3	45.8
		Heating	m^3/min	34.6	32.7	43.7
	Sound Level (SPL)	Cooling	dB(A)	45	48	48
		Heating	dB(A)	46	48	49
	Sound Level (PWL)	Cooling	dB(A)	59	59	64
	Operating Current (Max)		A	6.8	8.5	13.5
	Breaker Size		A	10	10	20
Ext. Piping	Diameter	Liquid/Gas	mm	6.35/9.52	6.35/9.52	6.35/12.7
	Max.Length	Out-In	m	20	20	30
	Max.Height	Out-In	m	12	12	30
Guaranteed Operating Range (Outdoor)		Cooling	℃	–10~+46	–10~+46	–15~+46
		Heating	℃	–10~+24	–10~+24	–10~+24

(*1) Refrigerant leakage contributes to climate change. Refrigerant with lower global warming potential (GWP) would contribute less to global warming than a refrigerant with higher GWP, if leaked to the atmosphere. This appliance contains a refrigerant fluid with a GWP equal to 1975. This means that if 1 kg of this refrigerant fluid would be leaked to the atmosphere, the impact on global warming would be 1975 times higher than 1 kg of CO_2, over a period of 100 years. Never try to interfere with the refrigerant circuit yourself or disassemble the product yourself and always ask a professional.
The GWP of R410A is 2088 in the IPCC 4th Assessment Report.
(*2) Energy consumption based on standard test results. Actual energy consumption will depend on how the appliance is used and where it is located.
(*3) SHi: Super High
(*4) SEER, SCOP and other related description are based on COMMISSION DELEGATED REGULATION (EU) No.626/2011. The temperature conditions for calculating SCOP are based on "Average Season".
(*5) SEER and SCOP are based on 2009/125/EC:Energy-related Products Directive and Regulation(EU) No206/2012.

Specification on Warmer/Colder Condition

Type				Inverter Heat Pump						
Indoor Unit				MSZ-LN25VG2		MSZ-LN35VG2		MSZ-LN50VG2		MSZ-LN60VG2
Outdoor Unit				MUZ-LN25VG2	MUZ-LN25VGHZ2	MUZ-LN35VG2	MUZ-LN35VGHZ2	MUZ-LN50VG2	MUZ-LN50VGHZ	MUZ-LN60VG
Refrigerant				R32 (*3)						
Cooling	Design load		kW	2.5	2.5	3.5	3.5	5	5.0	6.1
	Annual electricity consumption (*2)		kWh/a	83	83	129	130	205	230	285
	SEER			10.5	10.5	9.5	9.4	8.5	7.6	7.5
		Energy efficiency class		A^{+++}	A^{+++}	A^{+++}	A^{+++}	A^{+++}	A^{++}	A^{++}
Heating (Warmer Season)	Design load		kW	1.7 (2°C)	1.8 (2ºC)	2.0 (2°C)	2.2 (2ºC)	2.5 (2°C)	3.3 (2ºC)	3.3 (2°C)
	Declared Capacity	at reference design temperature	kW	1.7 (2°C)	1.8 (2ºC)	2.0 (2°C)	2.2 (2ºC)	2.5 (2°C)	3.3 (2ºC)	3.3 (2°C)
		at bivalent temperature	kW	1.7 (2°C)	1.8 (2ºC)	2.0 (2°C)	2.2 (2ºC)	2.5 (2°C)	3.3 (2ºC)	3.3 (2°C)
		at operation limit temperature	kW	2.5 (–15°C)	2.3 (-25ºC)	3.2 (-15°C)	3.1 (-25ºC)	4.2 (-15°C)	4.7 (-25ºC)	6.0 (-15°C)
	Back up heating capacity		kW	0.0 (2°C)	0.0 (2ºC)	0.0 (2°C)	0.0 (2ºC)	0.0 (2°C)	0.0(2ºC)	0.0 (2°C)
	Annual electricity consumption (*2)		kWh/a	369	382	431	467	602	779	779
	SCOP			6.4	6.6	6.5	6.5	5.8	5.9	5.9
		Energy efficiency class		A^{+++}	A^{+++}	A^{+++}	A^{+++}	A^{+++}	A^{+++}	A^{+++}
Heating (Colder Season)	Design load		kW	—	4.7 (-22ºC)	—	5.9 (-22ºC)	—	8.8 (-22ºC)	—
	Declared Capacity	at reference design temperature	kW	—	2.6 (-22ºC)	—	3.4 (-22ºC)	—	5.1 (-22ºC)	—
		at bivalent temperature	kW	—	3.2 (-10ºC)	—	4.0 (-10ºC)	—	6.0 (-10ºC)	—
		at operation limit temperature	kW	—	2.3 (-25ºC)	—	3.1 (-25ºC)	—	4.7 (-25ºC)	—
	Back up heating capacity		kW	—	2.1 (-22ºC)	—	2.5 (-22ºC)	—	3.7 (-22ºC)	—
	Annual electricity consumption (*2)		kWh/a	—	2425	—	3075	—	5340	—
	SCOP			—	4.0	—	4.0	—	3.4	—
		Energy efficiency class		—	A^{+}	—	A^{+}	—	A	—

Type				Inverter Heat Pump		
Indoor Unit				MSZ-FT25VG	MSZ-FT35VG	MSZ-FT50VG
Outdoor Unit				MUZ-FT25VGHZ	MUZ-FT35VGHZ	MUZ-FT50VGHZ
Refrigerant				R32 (*3)		
Cooling	Design load		kW	2.5	3.5	5.0
	Annual electricity consumption (*2)		kWh/a	101	142	243
	SEER			8.6	8.6	7.2
		Energy efficiency class		A^{+++}	A^{+++}	A^{++}
Heating (Warmer Season)	Design load		kW	1.8 (2ºC)	2.2 (2ºC)	2.7 (2ºC)
	Declared Capacity	at reference design temperature	kW	1.8 (2ºC)	2.2 (2ºC)	2.7 (2ºC)
		at bivalent temperature	kW	1.8 (2ºC)	2.2 (2ºC)	2.7 (2ºC)
		at operation limit temperature	kW	3.0 (-25ºC)	3.4 (-25ºC)	3.6 (-25ºC)
	Back up heating capacity		kW	0.0 (2ºC)	0.0 (2ºC)	0.0 (2ºC)
	Annual electricity consumption (*2)		kWh/a	432	527	684
	SCOP			5.8	5.8	5.5
		Energy efficiency class		A^{+++}	A^{+++}	A^{+++}
Heating (Colder Season)	Design load		kW	4.7 (-22ºC)	5.9 (-22ºC)	7.4 (-22ºC)
	Declared Capacity	at reference design temperature	kW	3.1 (-22ºC)	3.7 (-22ºC)	4.0 (-22ºC)
		at bivalent temperature	kW	3.2 (-10ºC)	4.0 (-10ºC)	5.0 (-10ºC)
		at operation limit temperature	kW	3.0 (-25ºC)	3.4 (-25ºC)	3.6 (-25ºC)
	Back up heating capacity		kW	1.6 (-22ºC)	2.2 (-22ºC)	3.4 (-22ºC)
	Annual electricity consumption (*2)		kWh/a	2766	3453	4707
	SCOP			3.5	3.5	3.3
		Energy efficiency class		A	A	B

Type				Inverter Heat Pump										
Indoor Unit				MSZ-AP20VG	MSZ-AP25VG		MSZ-AP35VG		MSZ-AP42VG		MSZ-AP50VG		MSZ-AP60VG(K)	MSZ-AP71VG(K)
Outdoor Unit				MUZ-AP20VG	MUZ-AP25VG	MUZ-AP25VGH	MUZ-AP35VG	MUZ-AP35VGH	MUZ-AP42VG	MUZ-AP42VGH	MUZ-AP50VG	MUZ-AP50VGH	MUZ-AP60VG	MUZ-AP71VG
Refrigerant				R32 (*3)										
Cooling	Design load		kW	2.0	2.5	2.5	3.5	3.5	4.2	4.2	5.0	5.0	6.1	7.1
	Annual electricity consumption (*2)		kWh/a	81	116	116	171	171	196	196	246	246	288	345
	SEER			8.6	7.6	7.6	7.2	7.2	7.5	7.5	7.2	7.2	7.4	7.2
		Energy efficiency class		A^{+++}	A^{++}	A^{++}	A^{++}	A^{++}	A^{++}	A^{++}	A^{++}	A^{++}	A^{++}	A^{++}
Heating (Warmer Season)	Design load		kW	1.3 (2ºC)	1.3 (2°C)	1.3 (2°C)	1.6 (2°C)	1.6 (2°C)	2.1 (2°C)	2.1 (2°C)	2.3 (2°C)	2.3 (2°C)	2.5 (2ºC)	3.7 (2ºC)
	Declared Capacity	at reference design temperature	kW	1.3 (2ºC)	1.3 (2°C)	1.3 (2°C)	1.6 (2°C)	1.6 (2°C)	2.1 (2°C)	2.1 (2°C)	2.3 (2°C)	2.3 (2°C)	2.5 (2ºC)	3.7 (2ºC)
		at bivalent temperature	kW	1.3 (2ºC)	1.3 (2°C)	1.3 (2°C)	1.6 (2°C)	1.6 (2°C)	2.1 (2°C)	2.1 (2°C)	2.3 (2°C)	2.3 (2°C)	2.5 (2ºC)	3.7 (2ºC)
		at operation limit temperature	kW	2.2 (-15ºC)	2.0 (-15°C)	1.6 (-20°C)	2.2 (-15°C)	1.6 (-20°C)	3.4 (-15°C)	2.2 (-20°C)	3.4 (-15°C)	2.3 (-20°C)	3.7 (-15ºC)	5.4 (-15ºC)
	Back up heating capacity		kW	0.0 (2ºC)	0.0 (2°C)	0.0 (2°C)	0.0 (2°C)	0.0 (2°C)	0.0 (2°C)	0.0 (2°C)	0.0 (2°C)	0.0 (2°C)	0.0 (2ºC)	0.0 (2ºC)
	Annual electricity consumption (*2)		kWh/a	350	337	337	923 / 418	417	507	507	563	563	627	891
	SCOP			5.2	5.4	5.4	5.4	5.4	5.8	5.8	5.7	5.7	5.5	5.8
		Energy efficiency class		A^{+++}	A^{+++}	A^{+++}	A^{+++}	A^{+++}	A^{+++}	A^{+++}	A^{+++}	A^{+++}	A^{+++}	A^{+++}

Type				Inverter Heat Pump					
Indoor Unit				MSZ-EF25VG		MSZ-EF35VG		MSZ-EF42VG	MSZ-EF50VG
Outdoor Unit				MUZ-EF25VG	MUZ-EF25VGH	MUZ-EF35VG	MUZ-EF35VGH	MUZ-EF42VG	MUZ-EF50VG
Refrigerant				R32 (*3)					
Cooling	Design load		kW	2.5	2.5	3.5	3.5	4.2	5.0
	Annual electricity consumption (*2)		kWh/a	96	96	139	139	186	233
	SEER			9.1	9.1	8.8	8.8	7.9	7.5
		Energy efficiency class		A^{+++}	A^{+++}	A^{+++}	A^{+++}	A^{++}	A^{++}
Heating (Warmer Season)	Design load		kW	1.3 (2ºC)	1.3 (2ºC)	1.6 (2ºC)	1.6 (2ºC)	2.1 (2ºC)	2.3 (2ºC)
	Declared Capacity	at reference design temperature	kW	1.3 (2ºC)	1.3 (2ºC)	1.6 (2ºC)	1.6 (2ºC)	2.1 (2ºC)	2.3 (2ºC)
		at bivalent temperature	kW	1.3 (2ºC)	1.3 (2ºC)	1.6 (2ºC)	1.6 (2ºC)	2.1 (2ºC)	2.3 (2ºC)
		at operation limit temperature	kW	2.0 (-15ºC)	2.0 (-15ºC)	2.4 (-15ºC)	2.4 (-15ºC)	3.4 (-15ºC)	3.5 (-15ºC)
	Back up heating capacity		kW	0.0 (2ºC)	0.0 (2ºC)	0.0 (2ºC)	0.0 (2ºC)	0.0 (2ºC)	0.0 (2ºC)
	Annual electricity consumption (*2)		kWh/a	311	311	398	398	489	595
	SCOP			5.9	5.9	5.6	5.6	6.0	5.4
		Energy efficiency class		A^{+++}	A^{+++}	A^{+++}	A^{+++}	A^{+++}	A^{+++}

Type				Inverter Heat Pump			
Indoor Unit				MSZ-BT20VG	MSZ-BT25VG	MSZ-BT35VG	MSZ-BT50VG
Outdoor Unit				MUZ-BT20VG	MUZ-BT25VG	MUZ-BT35VG	MUZ-BT50VG
Refrigerant				R32 (*3)			
Cooling	Design load		kW	2.0	2.5	3.5	5.0
	Annual electricity consumption (*2)		kWh/a	86	108	180	265
	SEER			8.1	8.1	6.8	6.6
		Energy efficiency class		A^{++}	A^{++}	A^{++}	A^{++}
Heating (Warmer Season)	Design load		kW	0.9 (2ºC)	1.1 (2ºC)	1.3 (2ºC)	2.1 (2ºC)
	Declared Capacity	At reference design temperature	kW	0.9 (2ºC)	1.1 (2ºC)	1.3 (2ºC)	2.1 (2ºC)
		at bivalent temperature	kW	0.9(2ºC)	1.1 (2ºC)	1.3 (2ºC)	2.1 (2ºC)
		at operation limit temperature	kW	1.3 (-15ºC)	1.7 (-15ºC)	2.1 (-15ºC)	3.4 (-15ºC)
	Back up heating capacity		kW	0.0 (2ºC)	0.0 (2ºC)	0.0 (2ºC)	0.0 (2ºC)
	Annual electricity consumption (*2)		kWh/a	234	268	304	543
	SCOP (*4)			5.3	5.7	5.9	5.4
		Energy efficiency class		A^{+++}	A^{+++}	A^{+++}	A^{+++}

Type				Inverter Heat Pump					
Indoor Unit				MSZ-HR25VF	MSZ-HR35VF	MSZ-HR42VF	MSZ-HR50VF	MSZ-HR60VF	MSZ-HR71VF
Outdoor Unit				MUZ-HR25VF	MUZ-HR35VF	MUZ-HR42VF	MUZ-HR50VF	MUZ-HR60VF	MUZ-HR71VF
Refrigerant				R32 (*3)					
Cooling	Design load		kW	2.5	3.4	4.2	5.0	6.1	7.1
	Annual electricity consumption (*2)		kWh/a	141	191	226	269	296	355
	SEER			6.2	6.2	6.5	6.5	7.2	7.0
		Energy efficiency class		A^{++}	A^{++}	A^{++}	A^{++}	A^{++}	A^{++}
Heating (Warmer Season)	Design load		kW	1.1 (2ºC)	1.3 (2ºC)	1.6 (2ºC)	2.1 (2ºC)	2.5 (2ºC)	3.0 (2ºC)
	Declared Capacity	at reference design temperature	kW	1.1 (2ºC)	1.3 (2ºC)	1.6 (2ºC)	2.1 (2ºC)	2.5 (2ºC)	3.0 (2ºC)
		at bivalent temperature	kW	1.1 (2ºC)	1.3 (2ºC)	1.6 (2ºC)	2.1 (2ºC)	2.5 (2ºC)	3.0 (2ºC)
		at operation limit temperature	kW	1.9 (-10ºC)	2.4 (-10ºC)	2.9 (-10ºC)	3.8 (-10ºC)	4.6 (-10ºC)	5.4 (-10ºC)
	Back up heating capacity		kW	0.0 (2ºC)	0.0 (2ºC)	0.0 (2ºC)	0.0 (2ºC)	0.0 (2ºC)	0.0 (2ºC)
	Annual electricity consumption (*2)		kWh/a	289	344	427	558	640	802
	SCOP			5.3	5.2	5.2	5.2	5.4	5.2
		Energy efficiency class		A^{+++}	A^{+++}	A^{+++}	A^{+++}	A^{+++}	A^{+++}

Type				Inverter Heat Pump							
Indoor Unit				MSZ-SF25VE3		MSZ-SF35VE3		MSZ-SF42VE3		MSZ-SF50VE3	
Outdoor Unit				MUZ-SF25VE	MUZ-SF25VEH	MUZ-SF35VE	MUZ-SF35VEH	MUZ-SF42VE	MUZ-SF42VEH	MUZ-SF50VE	MUZ-SF50VEH
Refrigerant				R410A (*1)							
Cooling	Design load		kW	2.5	2.5	3.5	3.5	4.2	4.2	5.0	5.0
	Annual electricity consumption (*2)		kWh/a	116	116	171	171	196	196	246	246
	SEER			7.6	7.6	7.2	7.2	7.5	7.5	7.2	7.2
		Energy efficiency class		A^{++}	A^{++}	A^{++}	A^{++}	A^{++}	A^{++}	A^{++}	A^{++}
Heating (Warmer Season)	Design load		kW	1.3 (2°C)	1.3 (2°C)	1.6 (2°C)	1.6 (2°C)	2.1 (2°C)	2.1 (2°C)	2.3 (2°C)	2.3 (2°C)
	Declared Capacity	at reference design temperature	kW	1.3 (2°C)	1.3 (2°C)	1.6 (2°C)	1.6 (2°C)	2.1 (2°C)	2.1 (2°C)	2.3 (2°C)	2.3 (2°C)
		at bivalent temperature	kW	1.3 (2°C)	1.3 (2°C)	1.6 (2°C)	1.6 (2°C)	2.1 (2°C)	2.1 (2°C)	2.3 (2°C)	2.3 (2°C)
		at operation limit temperature	kW	2.0 (−15°C)	1.6 (−20°C)	2.2 (−15°C)	1.6 (−20°C)	3.4 (−15°C)	2.2 (−20°C)	3.4 (−15°C)	2.3 (−20°C)
	Back up heating capacity		kW	0.0 (2°C)	0.0 (2°C)	0.0 (2°C)	0.0 (2°C)	0.0 (2°C)	0.0 (2°C)	0.0 (2°C)	0.0 (2°C)
	Annual electricity consumption (*2)		kWh/a	337	337	923 / 418	417	507	507	563	563
	SCOP			5.4	5.4	5.4	5.4	5.8	5.8	5.7	5.7
		Energy efficiency class		A^{+++}	A^{+++}	A^{+++}	A^{+++}	A^{+++}	A^{+++}	A^{+++}	A^{+++}

Type				Inverter Heat Pump	
Indoor Unit				MSZ-GF60VE2	MSZ-GF71VE2
Outdoor Unit				MUZ-GF60VE	MUZ-GF71VE
Refrigerant				R410A (*1)	
Cooling	Design load		kW	6.1	7.1
	Annual electricity consumption (*2)		kWh/a	311	364
	SEER			6.8	6.8
		Energy efficiency class		A^{++}	A^{++}
Heating (Warmer Season)	Design load		kW	2.5 (2°C)	3.7 (2°C)
	Declared Capacity	At reference design temperature	kW	2.5 (2°C)	3.7 (2°C)
		at bivalent temperature	kW	2.5 (2°C)	3.7 (2°C)
		at operation limit temperature	kW	3.7 (−15°C)	5.4 (−15°C)
	Back up heating capacity		kW	0.0 (2°C)	0.0 (2°C)
	Annual electricity consumption (*2)		kWh/a	664	963
	SCOP (*4)			5.3	5.4
		Energy efficiency class		A^{+++}	A^{+++}

Type				Inverter Heat Pump						
Indoor Unit				MSZ-HJ25VA	MSZ-HJ35VA	MSZ-HJ50VA	MSZ-HJ60VA	MSZ-HJ71VA	MSZ-DM25VA	MSZ-DM35VA
Outdoor Unit				MUZ-HJ25VA	MUZ-HJ35VA	MUZ-HJ50VA	MUZ-HJ60VA	MUZ-HJ71VA	MUZ-DM25VA	MUZ-DM35VA
Refrigerant				R410A (*1)						
Cooling	Design load		kW	2.5	3.1	5.0	6.1	7.1	2.5	3.1
	Annual electricity consumption (*2)		kWh/a	171	212	292	354	441	149	190
	SEER			5.1	5.1	6.0	6.0	5.6	5.8	5.7
		Energy efficiency class		A	A	A^{+}	A^{+}	A^{+}	A^{+}	A^{+}
Heating (Warmer Season)	Design load		kW	1.1 (2°C)	1.3 (2°C)	2.1 (2°C)	2.5 (2°C)	2.9 (2°C)	1.1 (2°C)	1.3 (2°C)
	Declared Capacity	at reference design temperature	kW	1.1 (2°C)	1.3 (2°C)	2.1 (2°C)	2.5 (2°C)	2.9 (2°C)	1.1 (2°C)	1.3 (2°C)
		at bivalent temperature	kW	1.1 (2°C)	1.3 (2°C)	2.1 (2°C)	2.5 (2°C)	2.9 (2°C)	1.1 (2°C)	1.3 (2°C)
		at operation limit temperature	kW	1.9 (−10°C)	2.4 (−10°C)	3.8 (−10°C)	4.6 (−10°C)	5.4 (−10°C)	1.9 (−10°C)	2.4 (−10°C)
	Back up heating capacity		kW	0.0 (2°C)	0.0 (2°C)	0.0 (2°C)	0.0 (2°C)	0.0 (2°C)	0.0 (2°C)	0.0 (2°C)
	Annual electricity consumption (*2)		kWh/a	356	426	539	674	813	325	386
	SCOP			4.3	4.3	5.5	5.1	4.9	4.7	4.7
		Energy efficiency class		A^{+}	A^{+}	A^{+++}	A^{+++}	A^{++}	A^{++}	A^{++}

(*1) Refrigerant leakage contributes to climate change. Refrigerant with lower global warming potential (GWP) would contribute less to global warming than a refrigerant with higher GWP, if leaked to the atmosphere. This appliance contains a refrigerant fluid with a GWP equal to 1975. This means that if 1 kg of this refrigerant fluid would be leaked to the atmosphere, the impact on global warming would be 1975 times higher than 1 kg of CO_2, over a period of 100 years. Never try to interfere with the refrigerant circuit yourself or disassemble the product yourself and always ask a professional.

(*2) Energy consumption based on standard test results. Actual energy consumption will depend on how the appliance is used and where it is located.

(*3) Refrigerant leakage contributes to climate change. Refrigerant with lower global warming potential (GWP) would contribute less to global warming than a refrigerant with higher GWP, if leaked to the atmosphere. This appliance contains a refrigerant fluid with a GWP equal to 550. This means that if 1 kg of this refrigerant fluid would be leaked to the atmosphere, the impact on global warming would be 550 times higher than 1 kg of CO_2, over a period of 100 years. Never try to interfere with the refrigerant circuit yourself or disassemble the product yourself and always ask a professional.

S

SERIES

SELECTION

Series line-up consists of two types of indoor units.
Choose the model that best matches room conditions.

SELECT INDOOR UNIT

Select the optimal unit and capacity required to match room construction and air conditioning requirements.

R410A

GOOD DESIGN AWARD 2015

Units without Remote Controller

SLZ-M15FA (Multi split series connection only)
SLZ-M25FA
SLZ-M35FA
SLZ-M50FA
SLZ-M60FA

Panel

Panel	With Signal Receiver	With 3D i-see Sensor	With Wireless Remote Controller
SLP-2FA			
SLP-2FAL	✓		
SLP-2FAE		✓	
SLP-2FALE	✓	✓	
SLP-2FALM	✓		✓
SLP-2FALME	✓	✓	✓

R410A

Units without Remote Controller

SEZ-M25DA
SEZ-M35DA
SEZ-M50DA
SEZ-M60DA
SEZ-M71DA

Units with Wireless Remote Controller

SEZ-M25DAL
SEZ-M35DAL
SEZ-M50DAL
SEZ-M60DAL
SEZ-M71DAL

SELECT OUTDOOR UNIT

There is one outdoor unit for respective indoor units.

SUZ-M25/35VA

SUZ-M50VA

SUZ-M60/71VA

R410A

SUZ-KA25/35VA6

R410A

SUZ-KA50/60/71VA6

✻ To confirm compatibility with the MXZ Series multi-type system, refer to the MXZ Series page.

SLZ SERIES

R410A

SLZ-M15/25/35/50/60FA

GOOD DESIGN AWARD 2015

Compact, lightweight ceiling cassette units with 4-way air outlets provide maximum comfort by evenly distributing airflow throughout the entire room.

New lineup

1.5kW has been introduced for multi connection. The diverse selection enables the best solution for both customer and location.

Capacity	15	25	35	50	60
SLZ-KF		✓	✓	✓	✓
SLZ-M	✓	✓	✓	✓	✓

Beautiful design

The straight-line form introduced has resulted in a beautiful square design. Its high affinity ensures the ability to blend in seamlessly with any interior. The indoor unit is an ideal match for office or store use.
Of course, design matched 2×2 (600mm*600mm) ceiling construction specifications.

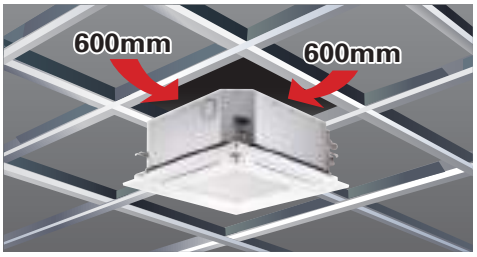

The height above ceiling of 245mm

The height above ceiling of 245mm enables fitting into narrow ceiling space. Installation is simple, even when the ceiling spaces are narrow to make the ceilings higher.
Of course, in addition to our products, replacing competitors' product is simplified too.

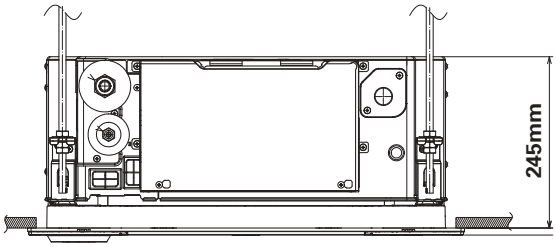

Energy-saving Performance*

The energy-saving performance achieved A++ in SEER and A+ in SCOP.
*In case of connecting with SUZ-KA-VA6

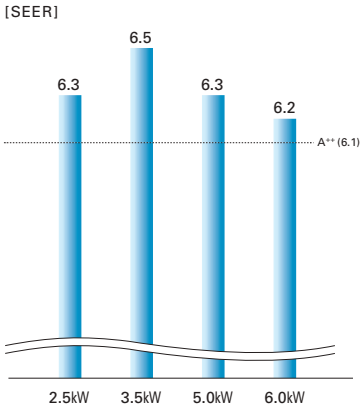

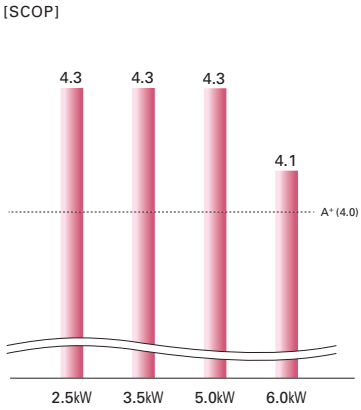

Quietness

Low sound level has been realized by introduction of 3D turbo fan. New SLZ can give users quieter and move comfortable room condition.

Horizontal Airflow

The new airflow control completely eliminates that uncomfortable drafty-feeling with the introduction of a horizontal airflow that spreads across the ceiling. The ideal airflow for offices and restaurants.

[Airflow distribution]*
SLZ-M60FA
Flow angle,cooling at 20°C (ceiling height 2.7m)

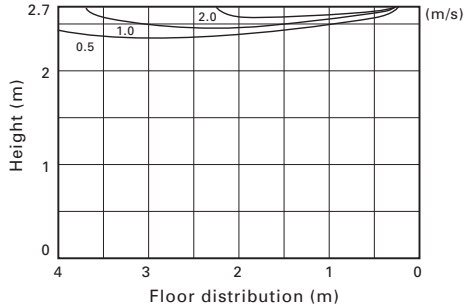

*Vane angle: Horizontal

Easy installation

Temporary hanging hook

The structure of the panel has been revised and is now equipped with a temporary hanging hook. This has improved work efficiency during temporary panel installation.

No need to remove screws

Installation is possible without removing the screws for control box simply loosen them. This eliminates the risk of losing screws.

■ Corner panel

■ Control box cover

Drain lift

As the result of using a larger drain pan, the maximum drain lifting height has been up to 850mm, greatly enhancing construction flexibility compared to the existing model.

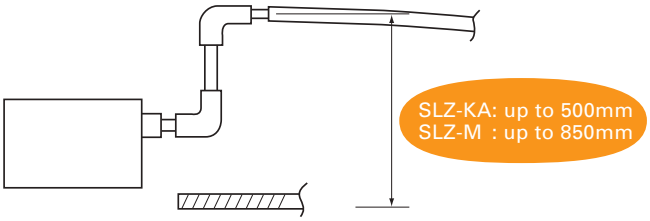

3D i-see Sensor for S & P SERIES

Detects number of people

Room occupancy energy-saving mode

The 3D i-see Sensor detects the number of people in the room. It then calculates the occupancy rate based on the maximum number of people in the room up to that point in time in order to save air-conditioning power. When the occupancy rate is approximately 30%, air-conditioning power equivalent to 1°C during both cooling and heating operation is saved. The temperature is controlled according to the number of people.

No occupancy energy-saving mode

When 3D i-see Sensor detects that no one is in the room, the system is switched to a pre-set power-saving mode. If the room remains unoccupied for more than 60min, air-conditioning power equivalent to 2°C during both cooling and heating operation is saved. This contributes to preventing waste in terms of heating and cooling.

No occupancy Auto-OFF mode*

When the room remains unoccupied for a pre-set period of time, the air conditioner turns off automatically, thereby providing even greater power savings. The time until operation is stopped can be set in intervals of 10min, ranging from 60 to 180 min.

* When MA Remote Controller is used to control multiple refrigerant systems, "No occupancy Auto-OFF mode" cannot be used.

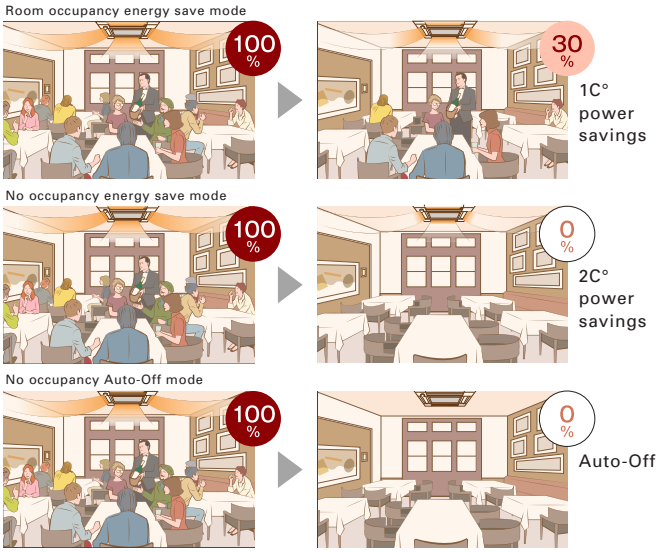

*PAR-40MAA is required for each setting

Detects people's position

Direct/Indirect settings*

Some people do not like the feel of wind, some want to be warm from head to toe. People's likes and dislikes vary. With the 3D i-see Sensor, it is possible to choose to block or not block to the wind for each vane.

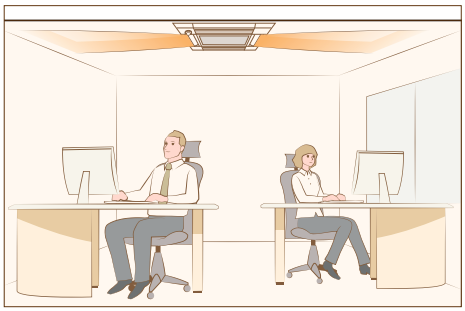

*PAR-40MAA or PAR-SL100A-E is required for each setting.

Seasonal airflow*

<When cooling>
Saves energy while keeping a comfortable effective temperature by automatically switching between ventilation and cooling. When a pre-set temperature is reached, the air conditioning unit switches to swing fan operation to maintain the effective temperature. This clever function contributes to keeping a comfortable coolness.

<When heating>
The air conditioning unit automatically switches between circulator and heating. Wasted heat that accumulates near the ceiling is reused via circulation. When a pre-set temperature is reached the air conditioner switches from heating to circulator and blows air in the horizontal direction. It pushes down the warm air that has gathered near the ceiling to people's height, thereby providing smart heating.

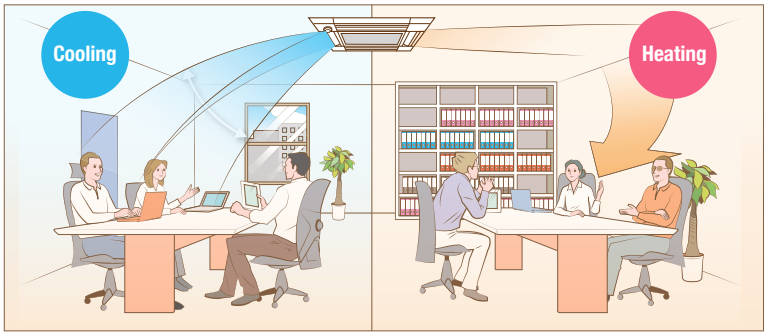

*PAR-40MAA is required for each setting.

Simultaneous Multi-system*

Multiple indoor units can be installed to match the room layout, ensuring comfort and coverage of the entire room. Connection of multiple cassettes to P Series power inverter outdoor units shown below is possible.

* Only for RA410A connection

Power Inverter Combination		SLZ-M35FA	SLZ-M50FA	SLZ-M60FA
PUZ-ZM71VHA PUHZ-ZRP71VHA2		Twin	—	—
	Distribution pipe	MSDD-50TR2-E MSDD-50TR-E		
PUZ-ZM100V(Y)KA PUHZ-ZRP100V(Y)KA3		Triple	Twin	—
	Distribution pipe	MSDT-111R3-E MSDT-111R-E	MSDD-50TR2-E MSDD-50TR-E	
PUZ-ZM125V(Y)KA PUHZ-ZRP125V(Y)KA3		Quadruple	Triple	Twin
	Distribution pipe	MSDF-1111R2-E MSDF-1111R-E	MSDT-111R3-E MSDT-111R-E	MSDD-50TR2-E2 MSDD-50TR-E
PUZ-ZM140V(Y)KA PUHZ-ZRP140V(Y)KA3		Quadruple	Triple	—
	Distribution pipe	MSDF-1111R2-E MSDF-1111R-E	MSDT-111R3-E MSDT-111R-E	—

SLZ-M SERIES

DC Inverter | Joint Lap | Rare Earth Magnet | DC Fan Motor | PAM | Grooved Piping | Heat Caulking Fixing Method

Indoor Unit

R410A

GOOD DESIGN AWARD 2015

SLZ-M15/25/35/50/60FA

Panel

Panel	With Signal Receiver	With 3D i-see Sensor	With Wireless Remote Controller
SLP-2FA			
SLP-2FAL	✓		
SLP-2FAE		✓	
SLP-2FALE	✓	✓	
SLP-2FALM	✓		✓
SLP-2FALME	✓	✓	✓

Outdoor Unit

SUZ-M25/35VA | SUZ-M50VA | SUZ-M60VA

Remote Controller

Enclosed in SLP-2FALM/SLP-2FALME

*optional

*optional

*optional

Pure White | AUTO VANE | Fresh-air Intake | Long Life | FA Check! | SWING | ACO | Auto Restart | Low Temp Cooling | Optional | Group Control Optional | M-NET connection Optional | Wi-Fi Interface Optional | MXZ connection | Drain Lift Up | Flare connection | Self Diagnosis | Failure Recall

Type				Inverter Heat Pump				
Indoor Unit				SLZ-M15FA	SLZ-M25FA	SLZ-M35FA	SLZ-M50FA	SLZ-M60FA
Outdoor Unit				for Multi connection	SUZ-M25VA	SUZ-M35VA	SUZ-M50VA	SUZ-M60VA
Refrigerant				R32*1				
Power Supply	Source			Outdoor power supply				
	Outdoor (V/Phase/Hz)			230 / Single / 50				
Cooling	Capacity	Rated	kW	–	2.5	3.5	4.6	5.7
		Min - Max	kW	–	1.4 - 3.2	0.7 - 3.9	1.0 - 5.2	1.5 - 6.3
	Total Input	Rated	kW	–	0.65	1.09	1.35	1.67
	Design Load		kW	–	2.5	3.5	4.6	5.7
	Annual Electricity Consumption*2		kWh/a	–	139	183	253	321
	SEER*3			–	6.3	6.7	6.3	6.2
		Energy Efficiency Class		–	A++	A++	A++	A++
Heating (Average Season)	Capacity	Rated	kW	–	3.2	4.0	5.0	6.4
		Min - Max	kW	–	1.3 - 4.2	1.0 - 5.0	1.3 - 5.5	1.6 - 7.3
	Total Input	Rated	kW	–	0.88	1.07	1.56	2.13
	Design Load		kW	–	2.2	2.6	3.6	4.6
	Declared Capacity	at reference design temperature	kW	–	2.0 (–10°C)	2.3 (–10°C)	3.2 (–10°C)	4.1 (–10°C)
		at bivalent temperature	kW	–	2.0 (–7°C)	2.3 (–7°C)	3.2 (–7°C)	4.1 (–7°C)
		at operation limit temperature	kW	–	2.0 (–10°C)	2.3 (–10°C)	3.2 (–10°C)	4.1 (–10°C)
	Back Up Heating Capacity		kW	–	0.2	0.3	0.4	0.5
	Annual Electricity Consumption*2		kWh/a	–	716	843	1191	1559
	SCOP*3			–	4.3	4.3	4.2	4.1
		Energy Efficiency Class		–	A+	A+	A+	A+
Operating Current (max)			A	–	7.0	8.7	13.7	15.1
Indoor Unit	Input	Rated	kW	0.02	0.02	0.02	0.03	0.04
	Operating Current (max)		A	0.17	0.20	0.24	0.32	0.43
	Dimensions <Panel>	H × W × D	mm	245-570-570 <10-625-625>	245-570-570 <10-625-625>	245-570-570 <10-625-625>	245-570-570 <10-625-625>	245-570-570 <10-625-625>
	Weight <Panel>		kg	15 <3>	15 <3>	15 <3>	15 <3>	15 <3>
	Air Volume [Lo-Mid-Hi]		m^3/min	6.0 - 6.5 - 7.0	6.5 - 7.5 - 8.5	6.5 - 8.0 - 9.5	7.0 - 9.0 - 11.5	7.5 - 11.5 - 13.0
	Sound Level (SPL) [Lo-Mid-Hi]		dB(A)	24 - 26 - 28	25 - 28 - 31	25 - 30 - 34	27 - 34 - 39	32 - 40 - 43
	Sound Level (PWL)		dB(A)	45	48	51	56	60
Outdoor Unit	Dimensions	H × W × D	mm	–	550 - 800 - 285	550 - 800 - 285	714 - 800 - 285	880 - 840 - 330
	Weight		kg	–	30	35	41	54
	Air Volume	Cooling	m^3/min	–	36.3	34.3	45.8	50.1
		Heating	m^3/min	–	34.6	32.7	43.7	50.1
	Sound Level (SPL)	Cooling	dB(A)	–	45	48	48	49
		Heating	dB(A)	–	46	48	49	51
	Sound Level (PWL)	Cooling	dB(A)	–	59	59	64	65
	Operating Current (max)		A	–	6.8	8.5	13.5	14.8
	Breaker Size		A	–	10	10	20	20
Ext. Piping	Diameter	Liquid / Gas	mm	–	6.35 / 9.52	6.35 / 9.52	6.35 / 12.7	6.35 / 15.88
	Max. Length	Out-In	m	–	20	20	30	30
	Max. Height	Out-In	m	–	12	12	30	30
Guaranteed Operating Range [Outdoor]		Cooling	°C	–	–10~+46	–10~+46	–15~+46	–15~+46
		Heating	°C	–	–10~+24	–10~+24	–10~+24	–10~+24

*1 Refrigerant leakage contributes to climate change. Refrigerant with lower global warming potential (GWP) would contribute less to global warming than a refrigerant with higher GWP, if leaked to the atmosphere. This appliance contains a refrigerant fluid with a GWP equal to 1975. This means that if 1 kg of this refrigerant fluid would be leaked to the atmosphere, the impact on global warming would be 1975 times higher than 1 kg of CO_2, over a period of 100 years. Never try to interfere with the refrigerant circuit yourself or disassemble the product yourself and always ask a professional.
The GWP of R410A is 2088 in the IPCC 4th Assessment Report.
*2 Energy consumption based on standard test results. Actual energy consumption will depend on how the appliance is used and where it is located.
*3 SEER and SCOP are based on 2009/125/EC:Energy-related Products Directive and Regulation(EU) No206/2012.

SLZ-M SERIES

DC Inverter | Joint Lap | Rare Earth Magnet | DC Fan Motor | PAM | Grooved Piping | Heat Caulking Fixing Method

Indoor Unit

R410A

GOOD DESIGN AWARD 2015

SLZ-M15/25/35/50/60FA

Outdoor Unit

R410A

SUZ-KA25/35VA6

R410A

SUZ-KA50/60VA6

Panel

Panel	With Signal Receiver	With 3D i-see Sensor	With Wireless Remote Controller
SLP-2FA			
SLP-2FAL	✓		
SLP-2FAE		✓	
SLP-2FALE	✓	✓	
SLP-2FALM	✓		✓
SLP-2FALME	✓	✓	✓

Remote Controller

Enclosed in SLP-2FALM/SLP-2FALME

*optional

*optional

*optional

Pure White | AUTO VANE | Fresh-air Intake | Long Life | FA Check! | SWING | ACO | Auto Restart | Low Temp Cooling | Optional | Group Control Optional | M-NET connection Optional | Wi-Fi Interface Optional | MXZ connection | Drain Lift Up | Flare connection | Self Diagnosis | Failure Recall

Type				Inverter Heat Pump				
Indoor Unit				SLZ-M15FA	SLZ-M25FA	SLZ-M35FA	SLZ-M50FA	SLZ-M60FA
Outdoor Unit				for Multi connection	SUZ-KA25VA6	SUZ-KA35VA6	SUZ-KA50VA6	SUZ-KA60VA6
Refrigerant				R410A*1				
Power Supply	Source			Outdoor power supply				
	Outdoor (V/Phase/Hz)			230 / Single / 50				
Cooling	Capacity	Rated	kW	–	2.6	3.5	4.6	5.6
		Min - Max	kW	–	1.5 - 3.2	1.4 - 3.9	2.3 - 5.2	2.3 - 6.5
	Total Input	Rated	kW	–	0.684	0.972	1.394	1.767
	Design Load		kW	–	2.6	3.5	4.6	5.6
	Annual Electricity Consumption*2		kWh/a	–	144	188	256	316
	SEER*3			–	6.3	6.5	6.3	6.2
		Energy Efficiency Class		–	A++	A++	A++	A++
Heating (Average Season)	Capacity	Rated	kW	–	3.2	4.0	5.0	6.4
		Min - Max	kW	–	1.3 - 4.2	1.7 - 5.0	1.7 - 6.0	2.5 - 7.4
	Total Input	Rated	kW	–	0.886	1.108	1.558	2.278
	Design Load		kW	–	2.2	2.6	3.6	4.6
	Declared Capacity	at reference design temperature	kW	–	2.0 (–10°C)	2.3 (–10°C)	3.2 (–10°C)	4.0 (–10°C)
		at bivalent temperature	kW	–	2.0 (–7°C)	2.3 (–7°C)	3.2 (–7°C)	4.0 (–7°C)
		at operation limit temperature	kW	–	2.0 (–10°C)	2.3 (–10°C)	3.2 (–10°C)	4.0 (–10°C)
	Back Up Heating Capacity		kW	–	0.2	0.3	0.4	0.4
	Annual Electricity Consumption*2		kWh/a	–	716	845	1172	1572
	SCOP*3			–	4.3	4.3	4.3	4.1
		Energy Efficiency Class		–	A+	A+	A+	A+
Operating Current (max)			A	–	7.2	8.4	12.3	14.4
Indoor Unit	Input	Rated	kW	0.02	0.02	0.02	0.03	0.04
	Operating Current (max)		A	0.17	0.20	0.24	0.32	0.43
	Dimensions <Panel>	H × W × D	mm	245-570-570 <10-625-625>	245-570-570 <10-625-625>	245-570-570 <10-625-625>	245-570-570 <10-625-625>	245-570-570 <10-625-625>
	Weight <Panel>		kg	15 <3>	15 <3>	15 <3>	15 <3>	15 <3>
	Air Volume [Lo-Mid-Hi]		m^3/min	6.0 - 6.5 - 7.0	6.5 - 7.5 - 8.5	6.5 - 8.0 - 9.5	7.0 - 9.0 - 11.5	7.5 - 11.5 - 13.0
	Sound Level (SPL) [Lo-Mid-Hi]		dB(A)	24 - 26 - 28	25 - 28 - 31	25 - 30 - 34	27 - 34 - 39	32 - 40 - 43
	Sound Level (PWL)		dB(A)	45	48	51	56	60
Outdoor Unit	Dimensions	H × W × D	mm	–	550 - 800 - 285	550 - 800 - 285	880 - 840 - 330	880 - 840 - 330
	Weight		kg	–	30	35	54	50
	Air Volume	Cooling	m^3/min	–	32.6	36.3	44.6	40.9
		Heating	m^3/min	–	34.7	34.8	44.6	49.2
	Sound Level (SPL)	Cooling	dB(A)	–	47	49	52	55
		Heating	dB(A)	–	48	50	52	55
	Sound Level (PWL)	Cooling	dB(A)	–	58	62	65	65
	Operating Current (max)		A	–	7.0	8.2	12.0	14.0
	Breaker Size		A	–	10	10	20	20
Ext. Piping	Diameter	Liquid / Gas	mm	–	6.35 / 9.52	6.35 / 9.52	6.35 / 12.7	6.35 / 15.88
	Max. Length	Out-In	m	–	20	20	30	30
	Max. Height	Out-In	m	–	12	12	30	30
Guaranteed Operating Range [Outdoor]		Cooling	℃	–	–10 ~ +46	–10 ~ +46	–15 ~ +46	–15 ~ +46
		Heating	℃	–	–10 ~ +24	–10 ~ +24	–10 ~ +24	–10 ~ +24

*1 Refrigerant leakage contributes to climate change. Refrigerant with lower global warming potential (GWP) would contribute less to global warming than a refrigerant with higher GWP, if leaked to the atmosphere. This appliance contains a refrigerant fluid with a GWP equal to 1975. This means that if 1 kg of this refrigerant fluid would be leaked to the atmosphere, the impact on global warming would be 1975 times higher than 1 kg of CO_2, over a period of 100 years. Never try to interfere with the refrigerant circuit yourself or disassemble the product yourself and always ask a professional.
The GWP of R410A is 2088 in the IPCC 4th Assessment Report.
*2 Energy consumption based on standard test results. Actual energy consumption will depend on how the appliance is used and where it is located.
*3 SEER and SCOP are based on 2009/125/EC:Energy-related Products Directive and Regulation(EU) No206/2012.

SEZ SERIES

SEZ-M25-71DA(L)

This concealed ceiling-mounted indoor unit series is compact, and fits easily into rooms with lowered ceilings. Highly reliable energy-saving performance makes it a best match choice for concealed unit installations.

Compact Ceiling-concealed Units

Only the intake-air grille and outlet vents are visible when using this ceiling-concealed indoor unit. The rest of the unit is conveniently hidden in the ceiling cavity, essentially leaving the ceiling and walls free of bulky looking devices and maintaining a high-class interior décor. The compact units require minimal space and can be installed in buildings with lowered ceilings, where exposed units were the rule in the past.

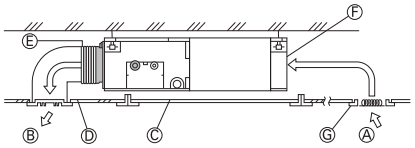

Ⓐ Air inlet
Ⓑ Air outlet
Ⓒ Access door
Ⓓ Ceiling surface
Ⓔ Canvas duct
Ⓕ Air filter
Ⓖ Inlet grille

Selection of Fan Speeds and Static Pressure Levels

DC fan motor settings have been increased to accommodate more application needs. Three fan speed settings (Low, Medium and High) and four static pressure levels (5, 15, 35 and 50Pa) are now available.

SEZ-M25-71DA(L)	5/15/35/50 Pa

Four Levels Available for All Models

We've lowered the minimum static pressure level, resulting in less room noise when the optimum static pressure is selected.

	SPL (Low Fan Mode)
	SEZ-M
External Static Pressure	15 Pa
35	23dB
50	30dB
60	30dB
71	30dB

Drain Pump (Optional)

The PAC-KE07DM-E drain pump is now available as an option.
With the pump, a drain hose length of up to 550mm can be used, adding to increased installation possibilities.

SEZ-M SERIES

DC Inverter | Joint Lap | DC Rotary | Rare Earth Magnet | DC Fan Motor | PAM | Grooved Piping | Heat Caulking Fixing Method

Indoor Unit

R410A

SEZ-M25/35/50/60/71DA (Requires Wired Remote Controller)
SEZ-M25/35/50/60/71DAL (Wireless Remote Controller is enclosed)

Outdoor Unit

SUZ-M25/35VA

SUZ-M50VA

SUZ-M60/71VA

Remote Controller

Enclosed in SEZ-M DAL

*optional (for SEZ-M DA)

*optional (for SEZ-M DA)

*optional (for SEZ-M DA)

AUTO | ACO | Auto Restart | Low Temp Cooling | DA (Optional) | Group Control (Optional) | M-NET connection (Optional) | Wi-Fi Interface (Optional) | MXZ connection | Drain Lift Up (Optional) | Flare connection | Self Diagnosis | Failure Recall

Type				Inverter Heat Pump				
Indoor Unit				SEZ-M25DA	SEZ-M35DA	SEZ-M50DA	SEZ-M60DA	SEZ-M71DA
Outdoor Unit				SUZ-M25VA	SUZ-M35VA	SUZ-M50VA	SUZ-M60VA	SUZ-M71VA
Refrigerant				R32*1				
Power Supply	**Source**			Outdoor power supply				
	Outdoor (V/Phase/Hz)			230 / Single / 50				
Cooling	**Capacity**	Rated	kW	2.5	3.5	5.0	6.1	7.1
		Min - Max	kW	1.4 - 3.2	0.7 - 3.9	1.1 - 5.6	1.6 - 6.3	2.2 - 8.1
	Total Input	Rated	kW	0.71	1.00	1.54	1.84	2.15
	Design Load		kW	2.5	3.5	5.0	6.1	7.1
	Annual Electricity Consumption*2		kWh/a	165	207	290	386	452
	SEER*3,*4			5.3	5.9	6.0	5.5	5.5
		Energy Efficiency Class		A	A+	A+	A	A
Heating (Average Season)	**Capacity**	Rated	kW	2.9	4.2	6.0	7.4	8.0
		Min - Max	kW	1.3 - 4.2	1.1 - 5.0	1.5 - 7.2	1.6 - 8.0	2.0 - 10.2
	Total Input	Rated	kW	0.80	1.07	1.61	2.04	2.28
	Design Load		kW	2.2	2.6	4.3	4.6	5.8
	Declared Capacity	at reference design temperature	kW	2.0 (–10°C)	2.3 (–10°C)	3.8 (–10°C)	4.1 (–10°C)	5.2 (–10°C)
		at bivalent temperature	kW	2.0 (–7°C)	2.3 (–7°C)	3.8 (–7°C)	4.1 (–7°C)	5.2 (–7°C)
		at operation limit temperature	kW	2.0 (–10°C)	2.3 (–10°C)	3.8 (–10°C)	4.1 (–10°C)	5.2 (–10°C)
	Back Up Heating Capacity		kW	0.2	0.3	0.5	0.5	0.6
	Annual Electricity Consumption*2		kWh/a	807	884	1499	1525	2072
	SCOP*3,*4			3.8	4.1	4.0	4.2	3.9
		Energy Efficiency Class		A	A+	A+	A+	A
Operating Current (max)			A	7.2	9.0	14.2	15.5	15.7
Indoor Unit	**Input**	Rated	kW	0.04	0.05	0.07	0.07	0.10
	Operating Current (max)		A	0.40	0.50	0.70	0.70	0.90
	Dimensions <Panel>	H × W × D	mm	200 - 790 - 700	200 - 990 - 700	200 - 990 - 700	200 - 1190 - 700	200 - 1190 - 700
	Weight <Panel>		kg	18	21	23	27	27
	Air Volume [Lo-Mid-Hi]		m^3/min	6 - 7 - 9	7 - 9 - 11	10 - 13 - 15	12 - 15 - 18	12 - 16 - 20
	External Static Pressure		Pa	5 / 15 / 35 / 50	5 / 15 / 35 / 50	5 / 15 / 35 / 50	5 / 15 / 35 / 50	5 / 15 / 35 / 50
	Sound Level (SPL) [Lo-Mid-Hi]		dB(A)	22 - 25 - 29	23 - 28 - 33	29 - 33 - 36	29 - 33 - 37	29 - 34 - 39
	Sound Level (PWL)		dB(A)	50	53	57	58	60
Outdoor Unit	**Dimensions**	H × W × D	mm	550 - 800 - 285	550 - 800 - 285	714 - 800 - 285	880 - 840 - 330	880 - 840 - 330
	Weight		kg	30	35	41	54	55
	Air Volume	Cooling	m^3/min	36.3	34.3	45.8	50.1	50.1
		Heating	m^3/min	34.6	32.7	43.7	50.1	50.1
	Sound Level (SPL)	Cooling	dB(A)	45	48	48	49	49
		Heating	dB(A)	46	48	49	51	51
	Sound Level (PWL)	Cooling	dB(A)	59	59	64	65	66
	Operating Current (max)		A	6.8	8.5	13.5	14.8	14.8
	Breaker Size		A	10	10	20	20	20
Ext. Piping	**Diameter**	Liquid / Gas	mm	6.35 / 9.52	6.35 / 9.52	6.35 / 12.7	6.35 / 15.88	9.52 / 15.88
	Max. Length	Out-In	m	20	20	30	30	30
	Max. Height	Out-In	m	12	12	30	30	30
Guaranteed Operating Range [Outdoor]		Cooling	℃	–10 ~ +46	–10 ~ +46	–15 ~ +46	–15 ~ +46	–15 ~ +46
		Heating	℃	–10 ~ +24	–10 ~ +24	–10 ~ +24	–10 ~ +24	–10 ~ +24

*1 Refrigerant leakage contributes to climate change. Refrigerant with lower global warming potential (GWP) would contribute less to global warming than a refrigerant with higher GWP, if leaked to the atmosphere. This appliance contains a refrigerant fluid with a GWP equal to 1975. This means that if 1 kg of this refrigerant fluid would be leaked to the atmosphere, the impact on global warming would be 1975 times higher than 1 kg of CO_2, over a period of 100 years. Never try to interfere with the refrigerant circuit yourself or disassemble the product yourself and always ask a professional. The GWP of R410A is 2088 in the IPCC 4th Assessment Report.
*2 Energy consumption based on standard test results. Actual energy consumption will depend on how the appliance is used and where it is located.
*3 SEER/SCOP are measured at ESP 35Pa.
*4 SEER and SCOP are based on 2009/125/EC:Energy-related Products Directive and Regulation(EU) No206/2012.

SEZ-M SERIES

DC Inverter | Joint Lap | DC Rotary | Rare Earth Magnet | DC Fan Motor | PAM | Grooved Piping | Heat Caulking Fixing Method

Indoor Unit

R410A

SEZ-M25/35/50/60/71DA (Requires Wired Remote Controller)
SEZ-M25/35/50/60/71DAL (Wireless Remote Controller is enclosed)

Outdoor Unit

R410A

SUZ-KA25/35VA6

R410A

SUZ-KA50/60/71VA6

Remote Controller

Enclosed in SEZ-M DAL

*optional (for SEZ-M DA)

*optional (for SEZ-M DA)

*optional (for SEZ-M DA)

AUTO | ACO | Auto Restart | Low Temp Cooling | DA (Optional) | Group Control (Optional) | M-NET connection (Optional) | Wi-Fi Interface (Optional) | MXZ connection | Drain Lift Up (Optional) | Flare connection | Self Diagnosis | Failure Recall

Type				Inverter Heat Pump				
Indoor Unit				SEZ-M25DA(L)	SEZ-M35DA(L)	SEZ-M50DA(L)	SEZ-M60DA(L)	SEZ-M71DA(L)
Outdoor Unit				SUZ-KA25VA6	SUZ-KA35VA6	SUZ-KA50VA6	SUZ-KA60VA6	SUZ-KA71VA6
Refrigerant				R410A*1				
Power Supply	Source			Outdoor power supply				
	Outdoor (V/Phase/Hz)			230 / Single / 50				
Cooling	Capacity	Rated	kW	2.5	3.5	5.1	5.6	7.1
		Min - Max	kW	1.5 - 3.2	1.4 - 3.9	2.3 - 5.6	2.3 - 6.3	2.8 - 8.3
	Total Input	Rated	kW	0.730	1.010	1.580	1.740	2.210
	Design Load		kW	2.5	3.5	5.1	5.6	7.1
	Annual Electricity Consumption*2		kWh/a	162	210	300	356	458
	SEER*3,*4			5.3	5.7	5.8	5.3	5.3
		Energy Efficiency Class		A	A+	A+	A	A
Heating (Average Season)	Capacity	Rated	kW	2.9	4.2	6.4	7.4	8.1
		Min - Max	kW	1.3 - 4.5	1.7 - 5.0	1.7 - 7.2	2.5 - 8.0	2.6 - 10.4
	Total Input	Rated	kW	0.803	1.130	1.800	2.200	2.268
	Design Load		kW	2.2	2.8	4.6	5.5	6.0
	Declared Capacity	at reference design temperature	kW	1.9 (–10°C)	2.5 (–10°C)	4.1 (–10°C)	4.5 (–10°C)	5.3 (–10°C)
		at bivalent temperature	kW	1.9 (–7°C)	2.5 (–7°C)	4.1 (–7°C)	4.8 (–7°C)	5.3 (–7°C)
		at operation limit temperature	kW	1.9 (–10°C)	2.5 (–10°C)	4.1 (–10°C)	4.5 (–10°C)	5.3 (–10°C)
	Back Up Heating Capacity		kW	0.3	0.3	0.5	1.0	0.7
	Annual Electricity Consumption*2		kWh/a	808	979	1653	1878	2202
	SCOP*3,*4			3.8	4.0	3.9	4.1	3.8
		Energy Efficiency Class		A	A+	A	A+	A
Operating Current (max)			A	7.4	8.7	12.7	14.7	17.0
Indoor Unit	Input	Rated	kW	0.040	0.050	0.070	0.070	0.100
	Operating Current (max)		A	0.4	0.5	0.7	0.7	0.9
	Dimensions <Panel>	H × W × D	mm	200 - 790 - 700	200 - 990 - 700	200 - 990 - 700	200 - 1190 - 700	200 - 1190 - 700
	Weight <Panel>		kg	18	21	23	27	27
	Air Volume [Lo-Mid-Hi]		m^3/min	6 - 7 - 9	7 - 9 - 11	10 - 13 - 15	12 - 15 - 18	12 - 16 - 20
	External Static Pressure		Pa	5 / 15 / 35 / 50	5 / 15 / 35 / 50	5 / 15 / 35 / 50	5 / 15 / 35 / 50	5 / 15 / 35 / 50
	Sound Level (SPL) [Lo-Mid-Hi]		dB(A)	22 - 25 - 29	23 - 28 - 33	29 - 33 - 36	29 - 33 - 37	29 - 34 - 39
	Sound Level (PWL)		dB(A)	50	53	57	58	60
Outdoor Unit	Dimensions	H × W × D	mm	550 - 800 - 285	550 - 800 - 285	880 - 840 - 330	880 - 840 - 330	880 - 840 - 330
	Weight		kg	30	35	54	50	53
	Air Volume	Cooling	m^3/min	32.6	36.3	44.6	40.9	50.1
		Heating	m^3/min	34.7	34.8	44.6	49.2	48.2
	Sound Level (SPL)	Cooling	dB(A)	47	49	52	55	55
		Heating	dB(A)	48	50	52	55	55
	Sound Level (PWL)	Cooling	dB(A)	58	62	65	65	69
	Operating Current (max)		A	7.0	8.0	12.0	14.0	16.1
	Breaker Size		A	10	10	20	20	20
Ext. Piping	Diameter	Liquid / Gas	mm	6.35 / 9.52	6.35 / 9.52	6.35 / 12.7	6.35 / 15.88	9.52 / 15.88
	Max. Length	Out-In	m	20	20	30	30	30
	Max. Height	Out-In	m	12	12	30	30	30
Guaranteed Operating Range [Outdoor]		Cooling	°C	–10 ~ +46	–10 ~ +46	–15 ~ +46	–15 ~ +46	–15 ~ +46
		Heating	°C	–10 ~ +24	–10 ~ +24	–10 ~ +24	–10 ~ +24	–10 ~ +24

*1 Refrigerant leakage contributes to climate change. Refrigerant with lower global warming potential (GWP) would contribute less to global warming than a refrigerant with higher GWP, if leaked to the atmosphere. This appliance contains a refrigerant fluid with a GWP equal to 1975. This means that if 1 kg of this refrigerant fluid would be leaked to the atmosphere, the impact on global warming would be 1975 times higher than 1 kg of CO_2, over a period of 100 years. Never try to interfere with the refrigerant circuit yourself or disassemble the product yourself and always ask a professional. The GWP of R410A is 2088 in the IPCC 4th Assessment Report.
*2 Energy consumption based on standard test results. Actual energy consumption will depend on how the appliance is used and where it is located.
*3 SEER/SCOP are measured at ESP 35Pa.
*4 SEER and SCOP are based on 2009/125/EC:Energy-related Products Directive and Regulation(EU) No206/2012.

P

SERIES

SELECTION

Line-up includes a selection of eight indoor units and four series of outdoor units.
Easily construct a system that best matches room air conditioning needs.

R410A INDOOR UNIT

4-way ceiling-cassette
PLA-ZM EA
PLA-M EA

Ceiling-concealed
PEAD-M

Ceiling-suspended
PCA-M

Professional Kitchen
PCA-M HA

Wall-mounted
PKA-M LA(L)
PKA-M KA(L)

Ceiling-concealed
PEA-M

R410A OUTDOOR UNIT

Power Inverter

PUZ-ZM35/50

PUZ-ZM60/71

PUZ-ZM100/125/140/
200/250

Standard Inverter

SUZ-M35

SUZ-M50

SUZ-M60/71

PUZ-M100/125/140

PUZ-M200/250

✻ Some indoor units cannot be used with this unit.

R410A INDOOR UNIT

4-way ceiling-cassette
PLA-ZM EA
PLA-M EA

Ceiling-concealed
PEAD-M

Ceiling-suspended
PCA-M

Professional Kitchen
PCA-M HA

Wall-mounted
PKA-M LA(L)
PKA-M KA(L)

Floor-standing
PSA-RP

Ceiling-concealed
PEA-M

R410A OUTDOOR UNIT

Power Inverter

PUHZ-ZRP35/50

PUHZ-ZRP60/71

PUHZ-ZRP100/125/140/
200/250

Standard Inverter

SUZ-KA35

SUZ-KA50/60/71

PUHZ-P100/125/140

PUHZ-P200/250

✻ Some indoor units cannot be used with this unit.

To confirm compatibility with the MXZ Series, refer to the MXZ Series page.

SELECT COMBINATION

Choose the installation pattern for the indoor units. (In the case of a multi-system, distribution piping is necessary, so please select the necessary piping as well.)

Single System

Simultaneous Multi-System

Twin Allows simultaneous operation of two indoor units on one floor.

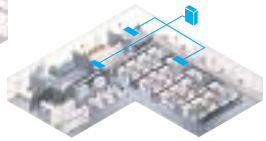

Triple Can cover a large-scale space or dispersed installation on the same floor.

Quadruple Realises the optimum temperature distribution even in a large space.

Connectable Combinations for Inverter Units

Outdoor Unit Capacity	Indoor Unit Capacity		
	Twin 50 : 50	Triple 33 : 33 : 33	Quadruple 25 : 25 : 25 : 25
71	35 × 2	—	—
100	50 × 2	—	—
125	60 × 2	—	—
140	71 × 2	50 × 3	—
200	100 × 2	60 × 3	50 × 4
250	125 × 2	71 × 3	60 × 4
Distribution Pipe	MSDD-50TR-E MSDD-50WR-E MSDD-50TR2-E2 MSDD-50WR2-E	MSDT-111R-E MSDT-111R3-E	MSDF-1111R-E MSDF-1111R2-E

Note: The distribution pipe listed is required for simultaneous multi-systems.

Power Inverter SERIES

Our Eco-conscious Power Inverter Series is designed to achieve industry-leading seasonal chergy-efficiency throught use of New R32 refrigerant and advanced technologies.

PUZ-ZM35/50VKA

PUZ-ZM60/71VHA

PUZ-ZM100/125/140V(Y)KA
PUZ-ZM200/250YKA

Industry-leading energy efficiency

Introduction of new R32 refrigerant realises improved cooling efficiency. Rating of more than 7.0 achieved for all capacity range.

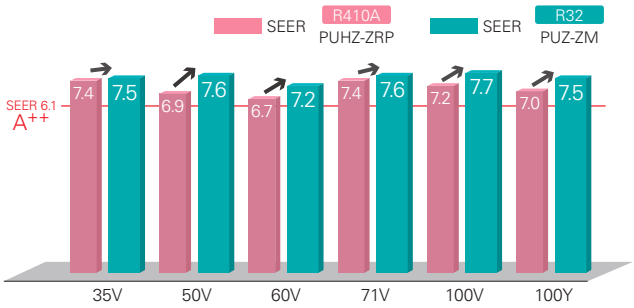

Introduction of new R32 refrigerant reduces energy consumption and realises energy savings.

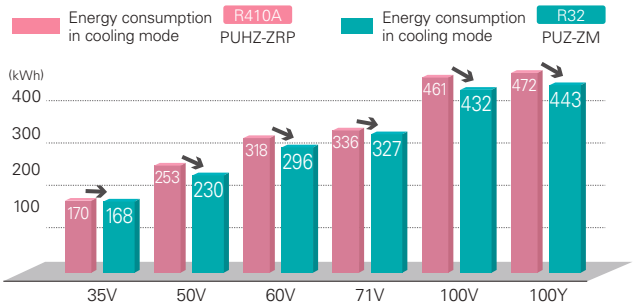

*Specifications reported are figures when PLA-ZM**EA is connected.

Longer piping (60/71/100/125/140/200/250)

Longer piping length realised for 60, 71, 100, 125, 140, 200 and 250 classes, widely increasing installation flexibility.

	Piping Length	
	R410A PUHZ-ZRP	R32 PUZ-ZM
35/50	50m	50m
60/71	50m	55m
100/125/140	75m	100m
200/250	100m	100m

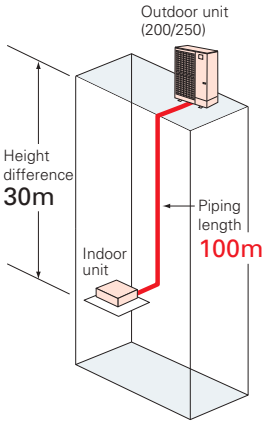

Rated heating capacity maintained down to –3°C*

Rated heating capacity maintained even when the outside temperature is down to –3°C. Stay warm even at times of cold weather.

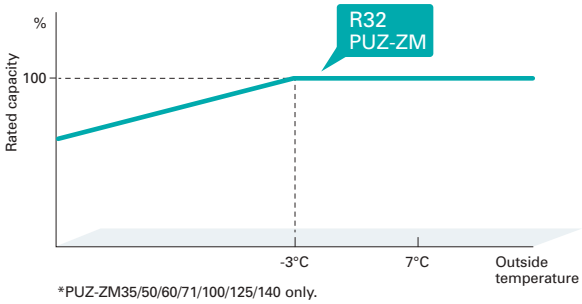

*PUZ-ZM35/50/60/71/100/125/140 only.

30Pa external static pressure

*Option (requires PAC-SJ71FM-E)

An external static pressure of 30Pa enables the outdoor unit to be installed on balconies in high-rise building or spaces near louvers.

30Pa external static pressure fan motor (option)
(PAC-SJ71FM-E)

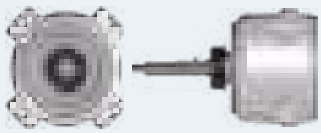

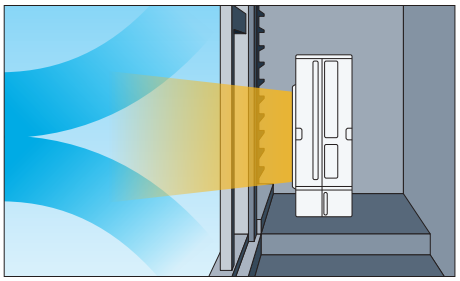

*Rated noise level will be higher when equipped with this option.

Standard Inverter SERIES

Our Standard Series become light and compact with greater energy-saving performance.

SUZ-M35VA

SUZ-M50VA

SUZ-M60/71VA

PUZ-M100/125/140V(Y)KA

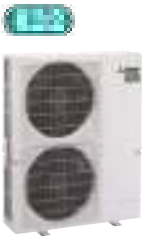

PUZ-M200/250YKA

Improved energy efficiency

Introduction of new R32 refrigerant realises improved cooling efficiency. Rating of more than 6.6 achieved for all capacity range.

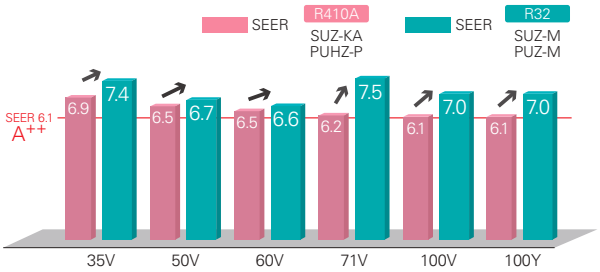

*Specifications are figures when PLA-RP/M is connected.

Longer piping (100/125/140/200/250)

Longer piping length realised for 100, 125, 140, 200 and 250 classes, widely increasing installation flexibility.

	Max. Piping Length	
	R410A SUZ-KA PUHZ-P	R32 SUZ-M PUZ-M
25/35	20m	20m
50/60/71	30m	30m
100	50m	55m
125/140	50m	65m
200/250	70m	70m

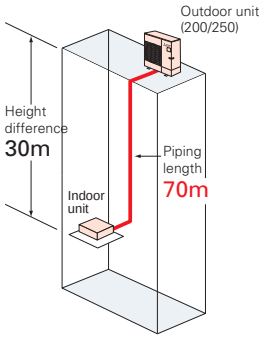

Light weight and compact size

Compact design fits into narrow outdoor unit space of condominiums and offices. Light weight design facilitates easy installation.

SUZ-KA50VA6

Height 880mm
Weight 54kg

SUZ-M50VA

Height 714mm — 18% reduction
Weight 41kg — 24% reduction

PUHZ-P140YHA2

Height 1,350mm
Weight 101kg

PUZ-M140YKA

Height 981mm — 27% reduction
Weight 85kg — 15% reduction

Unobstructive, compact, and easy to hide from view

Conventional outdoor units may spoil the view. Due to its compact size, the new model can be installed in locations that previous model is not suitable.

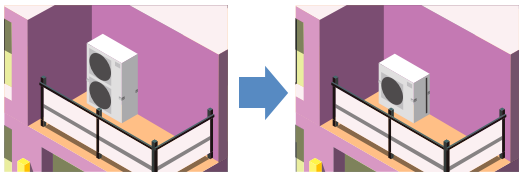

Easy transportation and installation

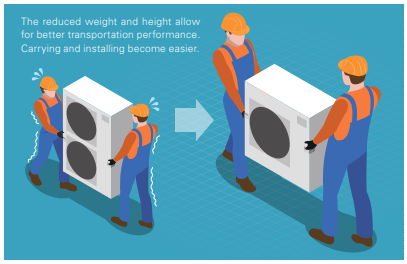

Transport efficiency improves thanks to its low height. The unit can even be transported by minivan.

R410A

PLA-ZM35/50/60/71/100/125/140EA

R410A

PLA-M35/50/60/71/100/125/140EA

PLA SERIES

A complete line-up including deluxe units that offer added energy savings. The incorporation of wide air-outlet and the "3D i-see Sensor" enhances airflow distribution control, achieving an enhanced level of comfort throughout the room. The synergy of higher energy efficiency and more comfortable room environment results in the utmost user satisfaction.

Deluxe 4-way Cassette Line-up

For users seeking even further energy savings, Mitsubishi Electric now offers deluxe units (PLA-ZM) to complete the line-up of models in this series, from 35-140. Compared to the standard models (PLA-RP), deluxe models provide additional energy savings, contributing to a significant reduction in electricity costs.

■Indoor/Outdoor Unit Combinations

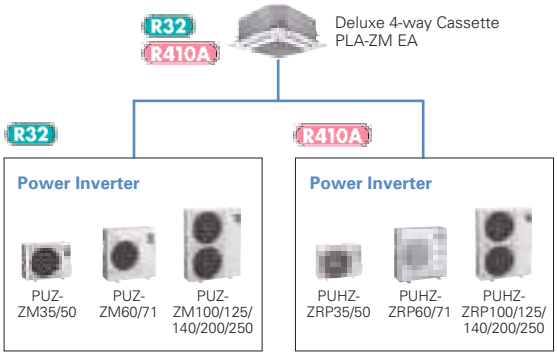

■Line-up

Series \ Model	35	50	60	71	100	125	140
R32 R410A Deluxe 4-way Cassette (PLA-ZM)	●	●	●	●	●	●	●
R32 R410A Standard 4-way Cassette (PLA-M)	●	●	●	●	●	●	●

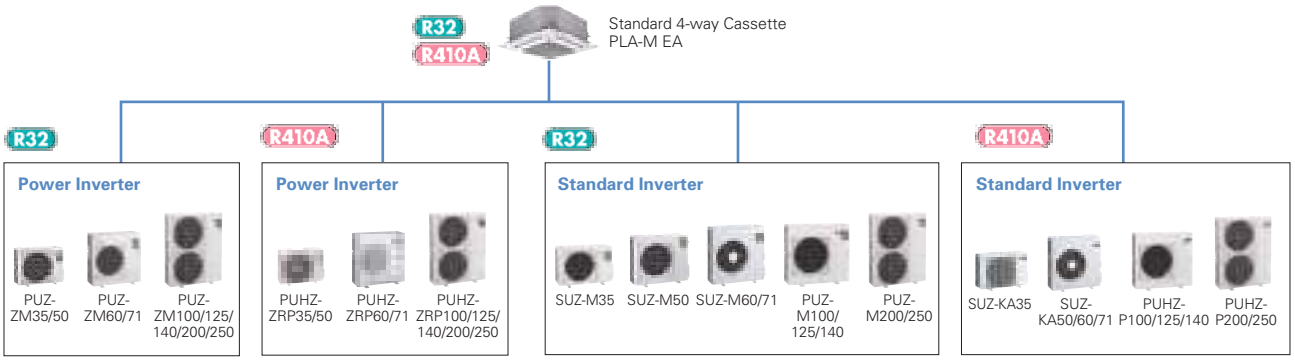

Industry-leading energy efficiency

Introduction of new R32 refrigerant realises improved cooling efficiency. Rating of more than 7.0 achieved for all capacity range.

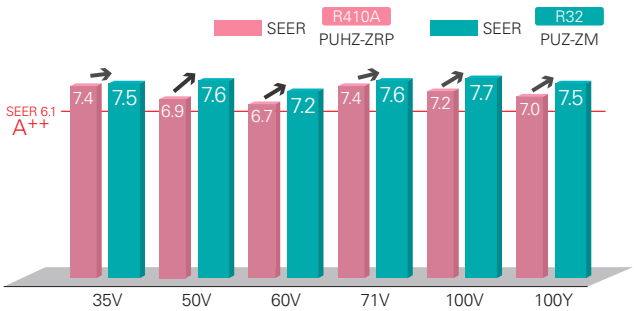

Introduction of new R32 refrigerant reduces energy consumption and realises energy savings.

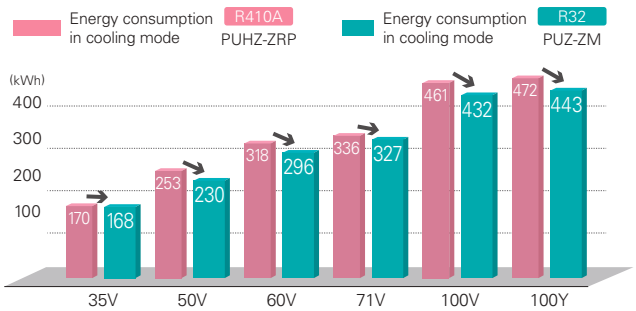

*Specifications reported are figures when PLA-ZM**EA is connected.

Horizontal Airflow

The new airflow control removes that uncomfortable drafty feeling with the introduction of a horizontal airflow that spreads across the ceiling. The ideal airflow for offices and restaurants.

[Horizontal airflow]
Model name: PLA-ZM140EA
Ceiling height: 3.2m
Mode: Cooling

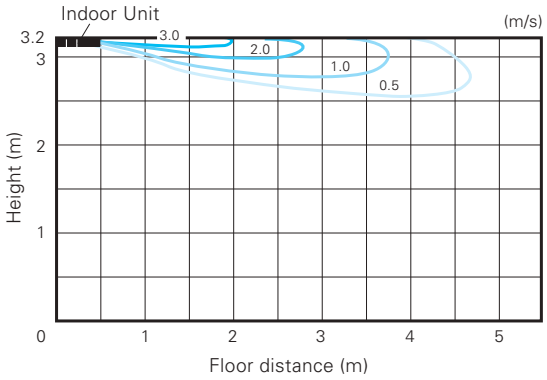

Automatic Grille Lowering Function (PLP-6EAJ)

An automatic grille lowering function is available for easy filter maintenance.
Special wired and wireless remote controllers can be used to lower the intake grille for maintenance.

Grille Elevation Remote Controller
(comes with the automatic elevation panel)

Wired Remote Controller

Wireless Remote Controller

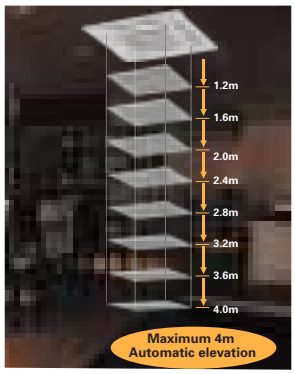

Easy Installation

Electrical box wiring

After reviewing the power supply terminal position in the electrical box, the structure was redesigned to improve connectivity. This has made previously complex wiring work easier.

■ Previous model (B Series)

■ New model (E Series)

Increased space for plumbing work

The top and bottom positions of the liquid and gas pipes have been reversed to allow the gas pipe work, which requires more effort, to be completed first. Further, through structural innovations related to the space around the pipes, the area where the spanner can be moved has been increased, thus improving liquid pipe work and enabling it to be completed smoothly.

■ Previous model (B Series)

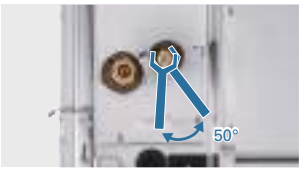

■ New model (E Series)

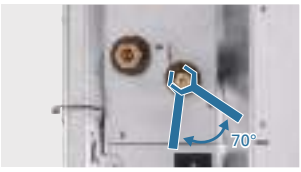

Temporary hanging hook

The structure of the panel has been revised and is now equipped with a temporary hanging hook. This has improved work efficiency during panel installation.

No need to remove screws

Installation is possible without removing the screws for the corner panel and the control box, simply loosen them. This lowers the risk of losing screws.

■ Corner panel

■ Control box cover

Lightweight decorative panel

After reviewing the structure and materials, weight has been reduced approximately 20% compared to the previous model, reducing the burden of installation.

3D i-see Sensor for S & P SERIES

Detects number of people

3D i-see Sensor detects the number of people in the room and sets the air-conditioning power accordingly. This makes automatic power-saving operation possible in places where the number of people entering and exiting is large. Additionally, when the area is continuously unoccupied, the system switches to a more enhanced power-saving mode. Depending on the setting, it will save additional capacity or stop operation altogether.

Detects people's position

Once the position of a person is detected, the duct angle of the vane is automatically adjusted in that direction. Each vane can be independently set to "block wind" or "not block wind" according to taste.

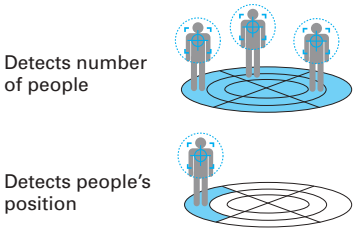

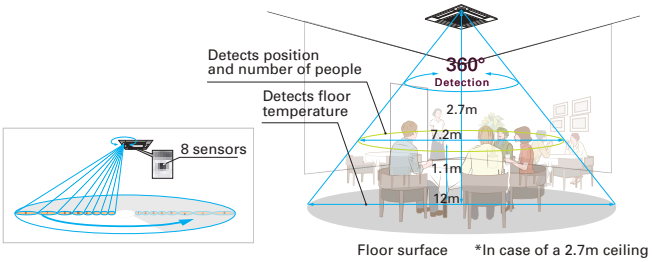

Detects number of people

Room occupancy energy-saving mode

The 3D i-see Sensor detects the number of people in the room. It then calculates the occupancy rate based on the maximum number of people in the room up to that point in time in order to save air-conditioning power. When the occupancy rate is approximately 30%, air-conditioning power equivalent to 1°C during both cooling and heating operation is saved. The temperature is controlled according to the number of people.

No occupancy energy-saving mode

When 3D i-see Sensor detects that no one is in the room, the system is switched to a pre-set power-saving mode. If the room remains unoccupied for more than 60min, air-conditioning power equivalent to 2°C during both cooling and heating operation is saved. This contributes to preventing waste in terms of heating and cooling.

No occupancy Auto-OFF mode*

When the room remains unoccupied for a pre-set period of time, the air conditioner turns off automatically, thereby providing even greater power savings. The time until operation is stopped can be set in intervals of 10min, ranging from 60 to 180 min.

* When MA Remote Controller is used to control multiple refrigerant systems, "No occupancy Auto-OFF mode" cannot be used.

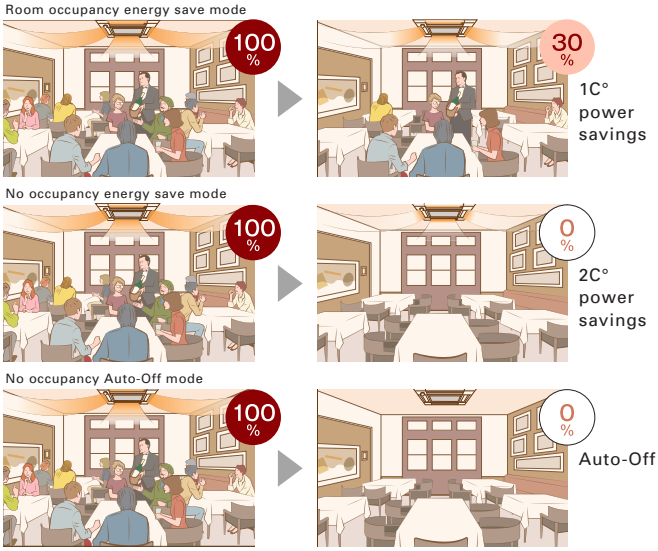

*PAR-40MAA is required for each setting

Detects people's position

Direct/Indirect settings*

Some people do not like the feel of wind, some want to be warm from head to toe. People's likes and dislikes vary. With the 3D i-see Sensor, it is possible to choose to block or not block to the wind for each vane.

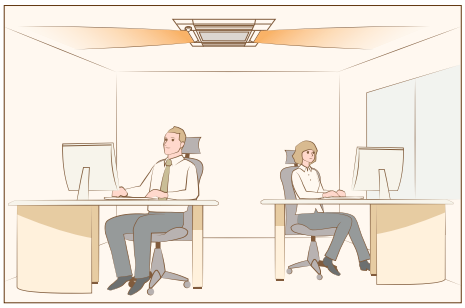

*PAR-40MAA or PAR-SL100A-E is required for each setting.

Seasonal airflow*

<When cooling>
Saves energy while keeping a comfortable effective temperature by automatically switching between ventilation and cooling. When a pre-set temperature is reached, the air conditioning unit switches to swing fan operation to maintain the effective temperature. This clever function contributes to keeping a comfortable coolness.

<When heating>
The air conditioning unit automatically switches between circulator and heating. Wasted heat that accumulates near the ceiling is reused via circulation. When a pre-set temperature is reached the air conditioner switches from heating to circulator and blows air in the horizontal direction. It pushes down the warm air that has gathered near the ceiling to people's height, thereby providing smart heating.

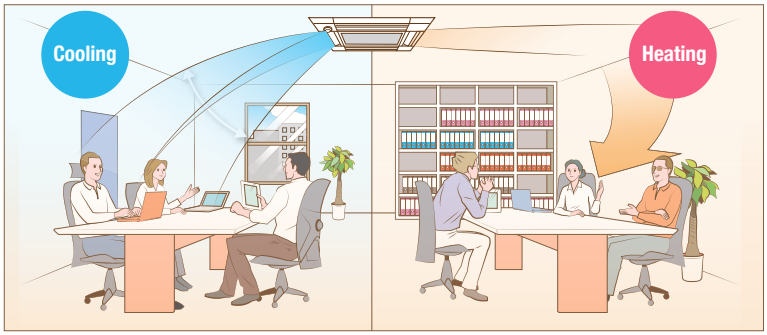

*PAR-40MAA is required for each setting.

SERIES SELECTION

Power Inverter Series

Indoor Unit

R410A

Panel PLA-ZM35/50/60/71/100/125/140EA

Panel	With Signal Receiver	With 3D i-see Sensor	With Wireless Remote Controller	With Auto Elevation
PLP-6EA				
PLP-6EAL	✓			
PLP-6EAE		✓		
PLP-6EALE	✓	✓		
PLP-6EAJ	✓			✓
PLP-6EAJE	✓	✓		✓
PLP-6EALM	✓		✓	
PLP-6EALME	✓	✓	✓	

Outdoor Unit

For Single

PUZ-ZM35/50

PUZ-ZM60/71

PUZ-ZM100/125/140

For Multi
(Twin/Triple/Quadruple)

PUZ-ZM71

PUZ-ZM100/125/140/200/250

Remote Controller

Optional

Optional

Optional

✻

✻ Enclosed in PLP-6EALM/PLP-6EALME

PLA-ZM EA Indoor Unit Combinations

Indoor unit combinations shown below are possible.

Indoor Unit Combination		Outdoor Unit Capacity																			
		For Single									For Twin						For Triple			For Quadruple	
		35	50	60	71	100	125	140	200	250	71	100	125	140	200	250	140	200	250	200	250
Power Inverter (PUHZ-ZRP)		35x1	50x1	60x1	71x1	100x1	125x1	140x1	–	–	35x2	50x2	60x2	71x2	100x2	125x2	50x3	60x3	71x3	50x4	60x4
	Distribution Pipe	–	–	–	–	–	–	–	–	–	MSDD-50TR2-E				MSDD-50WR2-E		MSDT-111R3-E			MSDF-1111R2-E	

SERIES SELECTION

Standard Inverter Series

Indoor Unit

R410A

Panel PLA-M35/50/60/71/100/125/140EA

Panel	With Signal Receiver	With 3D i-see Sensor	With Wireless Remote Controller	With Auto Elevation
PLP-6EA				
PLP-6EAL	✓			
PLP-6EAE		✓		
PLP-6EALE	✓	✓		
PLP-6EAJ	✓			✓
PLP-6EAJE	✓	✓		✓
PLP-6EALM	✓		✓	
PLP-6EALME	✓	✓	✓	

Outdoor Unit

For Single

SUZ-M35

SUZ-M50

SUZ-M60/71

PUZ-M100/125/140

For Multi
(Twin/Triple/Quadruple)

PUZ-M100/125/140

PUZ-M200/250

Remote Controller

Optional

Optional

Optional

✻

✻ Enclosed in PLP-6EALM/PLP-6EALME

PLA-M EA Indoor Unit Combinations

Indoor unit combinations shown below are possible.

Indoor Unit Combination		Outdoor Unit Capacity																			
		For Single									For Twin						For Triple			For Quadruple	
		35	50	60	71	100	125	140	200	250	71	100	125	140	200	250	140	200	250	200	250
Standard Inverter (SUZ & PUHZ-P)		35x1	50x1	60x1	71x1	100x1	125x1	140x1	–	–	–	50x2	60x2	71x2	100x2	125x2	50x3	60x3	71x3	50x4	60x4
	Distribution Pipe	–	–	–	–	–	–	–	–	–	–	MSDD-50TR2-E			MSDD-50WR2-E		MSDT-111R3-E			MSDF-1111R2-E	

PLA-ZM SERIES

POWER INVERTER

i-see Sensor (Optional) | Demand Control (Optional) | Pure White | AUTO VANE | Fresh-air Intake | High-efficiency (Optional) | Long Life | Check! | SWING | High Ceiling | Low Ceiling | AUTO | ACO | Auto Restart | Low Temp Cooling

Silent | Ampere Limit (60-140V/200/250) | Rotation Back-up (Optional) | (Optional) | Group Control | M-NET connection (Optional) | COMPO | Wi-Fi Interface (Optional) | Cleaning-free pipe reuse | Wiring Reuse (Optional) | Drain Lift Up | Pump Down | Flare connection | Self Diagnosis | Failure Recall

Type				Inverter Heat Pump									
Indoor Unit				PLA-ZM35EA	PLA-ZM50EA	PLA-ZM60EA	PLA-ZM71EA	PLA-ZM100EA		PLA-ZM125EA		PLA-ZM140EA	
Outdoor Unit				PUZ-ZM35VKA	PUZ-ZM50VKA	PUZ-ZM60VHA	PUZ-ZM71VHA	PUZ-ZM100VKA	PUZ-ZM100YKA	PUZ-ZM125VKA	PUZ-ZM125YKA	PUZ-ZM140VKA	PUZ-ZM140YKA
Refrigerant				R32*1									
Power Supply	Source			Outdoor power supply									
	Outdoor (V/Phase/Hz)			VKA・VHA:230 / Single / 50, YKA:400 / Three / 50									
Cooling	Capacity	Rated	kW	3.6	5.0	6.1	7.1	9.5	9.5	12.5	12.5	13.4	13.4
		Min - Max	kW	1.6 - 4.5	2.3 - 5.6	2.7 - 6.5	3.3 - 8.1	4.9 - 11.4	4.9 - 11.4	5.5 - 14.0	5.5 - 14.0	6.2 - 15.0	6.2 - 15.0
	Total Input	Rated	kW	0.705	1.106	1.452	1.651	2.065	2.065	3.378	3.378	3.722	3.722
	EER			5.10	4.52	4.20	4.30	4.60	4.60	3.70	3.70	3.60	3.60
		EEL Rank		–	–	–	–	–	–	–	–	–	–
	Design Load		kW	3.6	5.0	6.1	7.1	9.5	9.5	–	–	–	–
	Annual Electricity Consumption*2		kWh/a	168	230	296	327	432	443	–	–	–	–
	SEER*4			7.5	7.6	7.2	7.6	7.7	7.5	–	–	–	–
		Energy Efficiency Class		A++	A++	A++	A++	A++	A++	–	–	–	–
Heating (Average Season)	Capacity	Rated	kW	4.1	6.0	7.0	8.0	11.2	11.2	14.0	14.0	16.0	16.0
		Min - Max	kW	1.6 - 5.2	2.5 - 7.3	2.8 - 8.2	3.5 - 10.2	4.5 - 14.0	4.5 - 14.0	5.0 - 16.0	5.0 - 16.0	5.7 - 18.0	5.7 - 18.0
	Total Input	Rated	kW	0.820	1.363	1.707	1.818	2.604	2.604	3.674	3.674	4.312	4.312
	COP			5.00	4.40	4.10	4.40	4.30	4.30	3.81	3.81	3.71	3.71
		EEL Rank		–	–	–	–	–	–	–	–	–	–
	Design Load		kW	2.5	3.8	4.4	4.7	7.8	7.8	–	–	–	–
	Declared Capacity	at reference design temperature	kW	2.5 (–10°C)	3.8 (–10°C)	4.4 (–10°C)	4.7 (–10°C)	7.8 (–10°C)	7.8 (–10°C)	–	–	–	–
		at bivalent temperature	kW	2.5 (–10°C)	3.8 (–10°C)	4.4 (–10°C)	4.7 (–10°C)	7.8 (–10°C)	7.8 (–10°C)	–	–	–	–
		at operation limit temperature	kW	2.1 (–11°C)	3.7 (–11°C)	2.8 (–20°C)	3.5 (–20°C)	5.8 (–20°C)	5.8 (–20°C)	–	–	–	–
	Back Up Heating Capacity		kW	0	0	0	0	0	0	–	–	–	–
	Annual Electricity Consumption*2		kWh/a	745	1083	1339	1370	2277	2277	–	–	–	–
	SCOP*4			4.7	4.9	4.6	4.8	4.8	4.8	–	–	–	–
		Energy Efficiency Class		A++	A++	A++	A++	A++	A++	–	–	–	–
Operating Current (max)			A	13.2	13.2	19.2	19.3	27.0	8.5	27.0	10.0	28.7	13.7
Indoor Unit	Input	Rated	kW	0.03	0.03	0.03	0.05	0.07	0.07	0.08	0.08	0.10	0.10
	Operating Current (max)		A	0.21	0.22	0.22	0.34	0.47	0.47	0.52	0.52	0.66	0.66
	Dimensions <Panel>	H × W × D	mm	258 - 840 - 840 <40 - 950 - 950>			298 - 840 - 840 <40 - 950 - 950>						
	Weight <Panel>		kg	21 <5>			24 <5>	26 <5>	26 <5>	26 <5>	26 <5>	26 <5>	26 <5>
	Air Volume [Lo-Mi2-Mi1-Hi]		m³/min	11-13-15-16	12-14-16-18	12-14-16-18	17-19-21-23	19-22-25-28	19-22-25-28	21-24-26-29	21-24-26-29	24-26-29-32	24-26-29-32
	Sound Level (SPL) [Lo-Mi2-Mi1-Hi]		dB(A)	26-28-29-31	27-29-31-32	27-29-31-32	28-30-33-36	31-34-37-40	31-34-37-40	33-36-39-41	33-36-39-41	36-39-42-44	36-39-42-44
	Sound Level (PWL)		dB(A)	51	54	54	57	61	61	62	62	65	65
Outdoor Unit	Dimensions	H × W × D	mm	630 - 809 - 300		943 - 950 - 330 (+25)		1,338 - 1,050 - 330 (+40)					
	Weight		kg	46	46	70	70	116	123	116	125	118	131
	Air Volume	Cooling	m³/min	45	45	55	55	110	110	120	120	120	120
		Heating	m³/min	45	45	55	55	110	110	120	120	120	120
	Sound Level (SPL)	Cooling	dB(A)	44	44	47	47	49	49	50	50	50	50
		Heating	dB(A)	46	46	49	49	51	51	52	52	52	52
	Sound Level (PWL)	Cooling	dB(A)	65	65	67	67	69	69	70	70	70	70
	Operating Current (max)		A	13.0	13.0	19.0	19.0	26.5	8.0	26.5	9.5	28.0	13.0
	Breaker Size		A	16	16	25	25	32	16	32	16	40	16
Ext. Piping	Diameter	Liquid / Gas	mm	6.35 / 12.7		9.52 / 15.88	9.52 / 15.88	9.52 / 15.88	9.52 / 15.88	9.52 / 15.88	9.52 / 15.88	9.52 / 15.88	9.52 / 15.88
	Max. Length	Out-In	m	50	50	55	55	100	100	100	100	100	100
	Max. Height	Out-In	m	30	30	30	30	30	30	30	30	30	30
Guaranteed Operating Range [Outdoor]		Cooling*3	°C	–15 ~ +46	–15 ~ +46	–15 ~ +46	–15 ~ +46	–15 ~ +46	–15 ~ +46	–15 ~ +46	–15 ~ +46	–15 ~ +46	–15 ~ +46
		Heating	°C	–11 ~ +21	–11 ~ +21	–20 ~ +21	–20 ~ +21	–20 ~ +21	–20 ~ +21	–20 ~ +21	–20 ~ +21	–20 ~ +21	–20 ~ +21

*1 Refrigerant leakage contributes to climate change. Refrigerant with lower global warming potential (GWP) would contribute less to global warming than a refrigerant with higher GWP, if leaked to the atmosphere. This appliance contains a refrigerant fluid with a GWP equal to 550. This means that if 1 kg of this refrigerant fluid would be leaked to the atmosphere, the impact on global warming would be 550 times higher than 1 kg of CO_2, over a period of 100 years. Never try to interfere with the refrigerant circuit yourself or disassemble the product yourself and always ask a professional. The GWP of R32 is 675 in the IPCC 4th Assessment Report.
*2 Energy consumption based on standard test results. Actual energy consumption will depend on how the appliance is used and where it is located.
*3 Optional air protection guide is required where ambient temperature is lower than –5°C.
*4 SEER and SCOP are based on 2009/125/EC:Energy-related Products Directive and Regulation(EU) No206/2012.

PLA-M SERIES

STANDARD INVERTER

i-see Sensor (Optional) | Demand Control (Optional) | Pure White | AUTO VANE | Fresh-air Intake | High-efficiency (Optional) | Long Life | Check! | SWING | High Ceiling | Low Ceiling | AUTO | ACO | Auto Restart | Low Temp Cooling

Silent | Ampere Limit (60-140V/200/250) | Rotation Back-up (Optional) | (Optional) | Group Control | M-NET connection (Optional) | COMPO | Wi-Fi Interface (Optional) | Cleaning-free pipe reuse | Wiring Reuse (Optional) | Drain Lift Up | Pump Down | Flare connection | Self Diagnosis | Failure Recall

Type				Inverter Heat Pump									
Indoor Unit				PLA-M35EA	PLA-M50EA	PLA-M60EA	PLA-M71EA	PLA-M100EA		PLA-M125EA		PLA-M140EA	
Outdoor Unit				SUZ-M35VA	SUZ-M50VA	SUZ-M60VA	SUZ-M71VA	PUZ-M100VKA	PUZ-M100YKA	PUZ-M125VKA	PUZ-M125YKA	PUZ-M140VKA	PUZ-M140YKA
Refrigerant				R32*1									
Power Supply	Source			Outdoor power supply									
	Outdoor (V/Phase/Hz)			VA・VKA:230 / Single / 50, YKA:400 / Three / 50									
Cooling	Capacity	Rated	kW	3.6	5.5	6.1	7.1	9.5	9.5	12.1	12.1	13.4	13.4
		Min - Max	kW	0.8 - 3.9	1.2 - 5.6	1.6 - 6.3	2.2 - 8.1	4.0 - 10.6	4.0 - 10.6	5.8 - 13.0	5.8 - 13.0	5.8 - 14.1	5.8 - 14.1
	Total Input	Rated	kW	0.90	1.61	1.84	1.91	2.71	2.71	4.01	4.01	4.96	4.96
	EER			4.00	3.40	3.30	3.70	3.50	3.50	3.01	3.01	2.70	2.70
		EEL Rank		–	–	–	–	–	–	–	–	–	–
	Design Load		kW	3.6	5.5	6.1	7.1	9.5	9.5	12.1	12.1	13.4	13.4
	Annual Electricity Consumption*2		kWh/a	170	285	320	331	474	474	–	–	–	–
	SEER*4			7.4	6.7	6.6	7.5	7.0	7.0	–	–	–	–
		Energy Efficiency Class		A++	A++	A++	A++	A++	A++	–	–	–	–
Heating (Average Season)	Capacity	Rated	kW	4.1	6.0	7.0	8.0	11.2	11.2	13.5	13.5	15.0	15.0
		Min - Max	kW	1.0 - 5.0	1.5 - 7.2	1.6 - 8.0	2.0 - 10.2	2.8 - 12.5	2.8 - 12.5	4.1 - 15.0	4.1 - 15.0	4.2 - 15.8	4.2 - 15.8
	Total Input	Rated	kW	0.97	1.73	1.84	2.21	3.01	3.01	3.63	3.63	4.39	4.39
	COP			4.20	3.46	3.80	3.61	3.71	3.71	3.71	3.71	3.41	3.41
		EEL Rank		–	–	–	–	–	–	–	–	–	–
	Design Load		kW	2.6	4.3	4.6	5.8	8.0	8.0	8.5	8.5	9.4	9.4
	Declared Capacity	at reference design temperature	kW	2.3 (–10°C)	3.8 (–10°C)	4.1 (–10°C)	5.2 (–10°C)	6.0 (–10°C)	6.0 (–10°C)	8.5 (–10°C)	8.5 (–10°C)	9.4 (–10°C)	9.4 (–10°C)
		at bivalent temperature	kW	2.3 (–7°C)	3.8 (–7°C)	4.1 (–7°C)	5.2 (–7°C)	7.0 (–7°C)	7.0 (–7°C)	8.5 (–10°C)	8.5 (–10°C)	9.4 (–10°C)	9.4 (–10°C)
		at operation limit temperature	kW	2.3 (–10°C)	3.8 (–10°C)	4.1 (–10°C)	5.2 (–10°C)	4.5 (–15°C)	4.5 (–15°C)	6.0 (–15°C)	6.0 (–15°C)	7.0 (–15°C)	7.0 (–15°C)
	Back Up Heating Capacity		kW	0.3	0.5	0.5	0.6	2.0	2.0	–	–	–	–
	Annual Electricity Consumption*2		kWh/a	774	1456	1458	1796	2428	2428	–	–	–	–
	SCOP*4			4.7	4.1	4.4	4.5	4.6	4.6	–	–	–	–
		Energy Efficiency Class		A++	A+	A+	A+	A++	A++	–	–	–	–
Operating Current (max)			A	8.7	13.7	15.0	15.1	20.5	12.0	27.2	12.2	30.7	12.2
Indoor Unit	Input	Rated	kW	0.03	0.03	0.03	0.04	0.07	0.07	0.10	0.10	0.10	0.10
	Operating Current (max)		A	0.20	0.22	0.24	0.27	0.46	0.46	0.66	0.66	0.66	0.66
	Dimensions <Panel>	H × W × D	mm	258 - 840 - 840 <40 - 950 - 950>				298 - 840 - 840 <40 - 950 - 950>					
	Weight <Panel>		kg	19 <5>	19 <5>	21 <5>	21 <5>	24 <5>	24 <5>	26 <5>	26 <5>	26 <5>	26 <5>
	Air Volume [Lo-Mi2-Mi1-Hi]		m³/min	11-13-15-16	12-14-16-18	12-14-16-18	14-17-19-21	19-23-26-29	19-23-26-29	21-25-28-31	21-25-28-31	24-26-29-32	24-26-29-32
	Sound Level (SPL) [Lo-Mi2-Mi1-Hi]		dB(A)	26-28-29-31	27-29-31-32	27-29-31-32	28-30-32-34	31-34-37-40	31-34-37-40	33-37-41-44	33-37-41-44	36-39-42-44	36-39-42-44
	Sound Level (PWL)		dB(A)	51	54	54	56	61	61	65	65	65	65
Outdoor Unit	Dimensions	H × W × D	mm	550-800-285	714-800-285	880-840-330		981-1050-330 (+40)					
	Weight		kg	35	41	54	55	76	78	84	85	84	85
	Air Volume	Cooling	m³/min	34.3	45.8	50.1	50.1	79.0	79.0	86.0	86.0	86.0	86.0
		Heating	m³/min	32.7	43.7	50.1	50.1	79.0	79.0	92.0	92.0	92.0	92.0
	Sound Level (SPL)	Cooling	dB(A)	48	48	49	49	51	51	54	54	55	55
		Heating	dB(A)	48	49	51	51	54	54	56	56	57	57
	Sound Level (PWL)	Cooling	dB(A)	59	64	65	66	70	70	72	72	73	73
	Operating Current (max)		A	8.5	13.5	14.8	14.8	20.0	11.5	26.5	11.5	30.0	11.5
	Breaker Size		A	10	20	20	20	32	16	32	16	40	16
Ext. Piping	Diameter	Liquid / Gas	mm	6.35 / 9.52	6.35 / 12.7	6.35 / 15.88	9.52 / 15.88	9.52 / 15.88	9.52 / 15.88	9.52 / 15.88	9.52 / 15.88	9.52 / 15.88	9.52 / 15.88
	Max. Length	Out-In	m	20	30	30	30	55	55	65	65	65	65
	Max. Height	Out-In	m	12	30	30	30	30	30	30	30	30	30
Guaranteed Operating Range [Outdoor]		Cooling*3	°C	–10 ~ +46	–15 ~ +46	–15 ~ +46	–15 ~ +46	–15 ~ +46	–15 ~ +46	–15 ~ +46	–15 ~ +46	–15 ~ +46	–15 ~ +46
		Heating	°C	–10 ~ +24	–10 ~ +24	–10 ~ +24	–10 ~ +24	–15 ~ +21	–15 ~ +21	–15 ~ +21	–15 ~ +21	–15 ~ +21	–15 ~ +21

*1 Refrigerant leakage contributes to climate change. Refrigerant with lower global warming potential (GWP) would contribute less to global warming than a refrigerant with higher GWP, if leaked to the atmosphere. This appliance contains a refrigerant fluid with a GWP equal to 550. This means that if 1 kg of this refrigerant fluid would be leaked to the atmosphere, the impact on global warming would be 550 times higher than 1 kg of CO_2, over a period of 100 years. Never try to interfere with the refrigerant circuit yourself or disassemble the product yourself and always ask a professional. The GWP of R32 is 675 in the IPCC 4th Assessment Report.
*2 Energy consumption based on standard test results. Actual energy consumption will depend on how the appliance is used and where it is located.
*3 Optional air protection guide is required where ambient temperature is lower than –5°C.
*4 SEER and SCOP are based on 2009/125/EC:Energy-related Products Directive and Regulation(EU) No206/2012.

PLA-M SERIES

POWER INVERTER

i see Sensor (Optional) | Demand Control (Optional) | Pure White | AUTO VANE | Fresh-air Intake | High-efficiency (Optional) | Long Life | Check! | SWING | High Ceiling | Low Ceiling | AUTO | ACO | Auto Restart | Low Temp Cooling

Silent | Ampere Limit (60-140V/200/250) | Rotation Back-up (Optional) | (Optional) | Group Control | M-NET connection (Optional) | COMPO | Wi-Fi Interface (Optional) | Cleaning-free pipe roles | Wiring Reuse (Optional) | Drain Lift Up | Pump Down | Flare connection | Self Diagnosis | Failure Recall

Type				Inverter Heat Pump									
Indoor Unit				PLA-M35EA	PLA-M50EA	PLA-M60EA	PLA-M71EA	PLA-M100EA		PLA-M125EA		PLA-M140EA	
Outdoor Unit				PUZ-ZM35VKA	PUZ-ZM50VKA	PUZ-ZM60VHA	PUZ-ZM71VHA	PUZ-ZM100VKA	PUZ-ZM100YKA	PUZ-ZM125VKA	PUZ-ZM125YKA	PUZ-ZM140VKA	PUZ-ZM140YKA
Refrigerant				R32*1									
Power Supply	Source			Outdoor power supply									
	Outdoor (V/Phase/Hz)			VKA・VHA:230 / Single / 50, YKA:400 / Three / 50									
Cooling	Capacity	Rated	kW	3.6	5.0	6.1	7.1	9.5	9.5	12.5	12.5	13.4	13.4
		Min - Max	kW	1.6 - 4.5	2.3 - 5.6	2.7 - 6.5	3.3 - 8.1	4.9 - 11.4	4.9 - 11.4	5.5 - 14.0	5.5 - 14.0	6.2 - 15.0	6.2 - 15.0
	Total Input	Rated	kW	0.751	1.175	1.523	1.716	2.084	2.084	3.399	3.399	3.746	3.746
	EER			4.79	4.25	4.00	4.14	4.56	4.56	3.68	3.68	3.58	3.58
		EEL Rank		–	–	–	–	–	–	–	–	–	–
	Design Load		kW	3.6	5.0	6.1	7.1	9.5	9.5	–	–	–	–
	Annual Electricity Consumption*2		kWh/a	172	234	299	332	435	446	–	–	–	–
	SEER*4			7.3	7.4	7.1	7.4	7.6	7.4	–	–	–	–
		Energy Efficiency Class		A++	A++	A++	A++	A++	A++	–	–	–	–
Heating (Average Season)	Capacity	Rated	kW	4.1	6.0	7.0	8.0	11.2	11.2	14.0	14.0	16.0	16.0
		Min - Max	kW	1.6 - 5.2	2.5 - 7.3	2.8 - 8.2	3.5 - 10.2	4.5 - 14.0	4.5 - 14.0	5.0 - 16.0	5.0 - 16.0	5.7 - 18.0	5.7 - 18.0
	Total Input	Rated	kW	0.890	1.581	1.863	2.014	2.685	2.685	3.773	3.773	4.365	4.365
	COP			4.61	3.79	3.76	3.97	4.17	4.17	3.71	3.71	3.67	3.67
		EEL Rank		–	–	–	–	–	–	–	–	–	–
	Design Load		kW	2.5	3.8	4.4	4.7	7.8	7.8	–	–	–	–
	Declared Capacity	at reference design temperature	kW	2.5 (–10°C)	3.8 (–10°C)	4.4 (–10°C)	4.7 (–10°C)	7.8 (–10°C)	7.8 (–10°C)	–	–	–	–
		at bivalent temperature	kW	2.5 (–10°C)	3.8 (–10°C)	4.4 (–10°C)	4.7 (–10°C)	7.8 (–10°C)	7.8 (–10°C)	–	–	–	–
		at operation limit temperature	kW	2.1 (–11°C)	3.7 (–11°C)	2.8 (–20°C)	3.5 (–20°C)	5.8 (–20°C)	5.8 (–20°C)	–	–	–	–
	Back Up Heating Capacity		kW	0	0	0	0	0	0	–	–	–	–
	Annual Electricity Consumption*2		kWh/a	797	1184	1420	1432	2521	2521	–	–	–	–
	SCOP*4			4.3	4.4	4.3	4.6	4.3	4.3	–	–	–	–
		Energy Efficiency Class		A+	A+	A+	A++	A+	A+	–	–	–	–
Operating Current (max)			A	13.2	13.2	19.2	19.3	27.0	8.5	27.2	10.2	28.7	13.7
Indoor Unit	Input	Rated	kW	0.03	0.03	0.03	0.04	0.07	0.07	0.10	0.10	0.10	0.10
	Operating Current (max)		A	0.20	0.22	0.24	0.27	0.46	0.46	0.66	0.66	0.66	0.66
	Dimensions <Panel>	H × W × D	mm	258 - 840 - 840 <40 - 950 - 950>			298 - 840 - 840 <40 - 950 - 950>						
	Weight <Panel>		kg	19 <5>	19 <5>	21 <5>	21 <5>	24 <5>	24 <5>	26 <5>	26 <5>	26 <5>	26 <5>
	Air Volume [Lo-Mi2-Mi1-Hi]		m^3/min	11-13-15-16	12-14-16-18	12-14-16-18	14-17-19-21	19-23-26-29	19-23-26-29	21-25-28-31	21-25-28-31	24-26-29-32	24-26-29-32
	Sound Level (SPL) [Lo-Mi2-Mi1-Hi]		dB(A)	26-28-29-31	27-29-31-32	27-29-31-32	28-30-32-34	31-34-37-40	31-34-37-40	33-37-41-44	33-37-41-44	36-39-42-44	36-39-42-44
	Sound Level (PWL)		dB(A)	51	54	54	56	61	61	65	65	65	65
Outdoor Unit	Dimensions	H × W × D	mm	630 - 809 - 300		943 - 950 - 330 (+25)		1,338 - 1,050 - 330 (+40)					
	Weight		kg	46	46	70	70	116	123	116	125	118	131
	Air Volume	Cooling	m^3/min	45	45	55	55	110	110	120	120	120	120
		Heating	m^3/min	45	45	55	55	110	110	120	120	120	120
	Sound Level (SPL)	Cooling	dB(A)	44	44	47	47	49	49	50	50	50	50
		Heating	dB(A)	46	46	49	49	51	51	52	52	52	52
	Sound Level (PWL)	Cooling	dB(A)	65	65	67	67	69	69	70	70	70	70
	Operating Current (max)		A	13.0	13.0	19.0	19.0	26.5	8.0	26.5	9.5	28.0	13.0
	Breaker Size		A	16	16	25	25	32	16	32	16	40	16
Ext. Piping	Diameter	Liquid / Gas	mm	6.35 / 12.7		9.52 / 15.88	9.52 / 15.88	9.52 / 15.88	9.52 / 15.88	9.52 / 15.88	9.52 / 15.88	9.52 / 15.88	9.52 / 15.88
	Max. Length	Out-In	m	50	50	55	55	100	100	100	100	100	100
	Max. Height	Out-In	m	30	30	30	30	30	30	30	30	30	30
Guaranteed Operating Range [Outdoor]		Cooling*3	°C	–15 ~ +46	–15 ~ +46	–15 ~ +46	–15 ~ +46	–15 ~ +46	–15 ~ +46	–15 ~ +46	–15 ~ +46	–15 ~ +46	–15 ~ +46
		Heating	°C	–11 ~ +21	–11 ~ +21	–20 ~ +21	–20 ~ +21	–20 ~ +21	–20 ~ +21	–20 ~ +21	–20 ~ +21	–20 ~ +21	–20 ~ +21

*1 Refrigerant leakage contributes to climate change. Refrigerant with lower global warming potential (GWP) would contribute less to global warming than a refrigerant with higher GWP, if leaked to the atmosphere. This appliance contains a refrigerant fluid with a GWP equal to 550. This means that if 1 kg of this refrigerant fluid would be leaked to the atmosphere, the impact on global warming would be 550 times higher than 1 kg of CO_2, over a period of 100 years. Never try to interfere with the refrigerant circuit yourself or disassemble the product yourself and always ask a professional. The GWP of R32 is 675 in the IPCC 4th Assessment Report.

*2 Energy consumption based on standard test results. Actual energy consumption will depend on how the appliance is used and where it is located.

*3 Optional air protection guide is required where ambient temperature is lower than –5°C.

*4 SEER and SCOP are based on 2009/125/EC:Energy-related Products Directive and Regulation(EU) No206/2012.

SERIES SELECTION

Power Inverter Series

Indoor Unit

R410A

Panel PLA-ZM35/50/60/71/100/125/140EA

Panel	With Signal Receiver	With 3D i-see Sensor	With Wireless Remote Controller	With Auto Elevation
PLP-6EA				
PLP-6EAL	✓			
PLP-6EAE		✓		
PLP-6EALE	✓	✓		
PLP-6EAJ	✓			✓
PLP-6EAJE	✓	✓		✓
PLP-6EALM	✓		✓	
PLP-6EALME	✓	✓	✓	

Outdoor Unit

R410A

For Single

PUHZ-ZRP35/50

PUHZ-ZRP60/71

PUHZ-ZRP100/125/140

R410A

For Multi
(Twin/Triple/Quadruple)

PUHZ-ZRP71

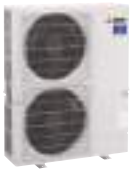

PUHZ-ZRP100/125/140/200/250

Remote Controller

Optional

Optional

Optional

✻ Enclosed in PLP-6EALM/PLP-6EALME

Standard Inverter Series

Indoor Unit

R410A

Panel PLA-M35/50/60/71/100/125/140EA

Panel	With Signal Receiver	With 3D i-see Sensor	With Wireless Remote Controller	With Auto Elevation
PLP-6EA				
PLP-6EAL	✓			
PLP-6EAE		✓		
PLP-6EALE	✓	✓		
PLP-6EAJ	✓			✓
PLP-6EAJE	✓	✓		✓
PLP-6EALM	✓		✓	
PLP-6EALME	✓	✓	✓	

Outdoor Unit

R410A

For Single

SUZ-KA35

SUZ-KA50/60/71

PUHZ-P100/125/140

R410A

For Multi
(Twin/Triple/Quadruple)

PUHZ-P100/125/140

PUHZ-P200/250

Remote Controller

Optional

Optional

Optional

✻ Enclosed in PLP-6EALM/PLP-6EALME

PLA-ZM/RP EA Indoor Unit Combinations

Indoor unit combinations shown below are possible.

Indoor Unit Combination		Outdoor Unit Capacity																			
		For Single									For Twin						For Triple			For Quadruple	
		35	50	60	71	100	125	140	200	250	71	100	125	140	200	250	140	200	250	200	250
Power Inverter (PUHZ-ZRP)		35x1	50x1	60x1	71x1	100x1	125x1	140x1	–	–	35x2	50x2	60x2	71x2	100x2	125x2	50x3	60x3	71x3	50x4	60x4
	Distribution Pipe	–	–	–	–	–	–	–	–	–	MSDD-50TR-E				MSDD-50WR-E		MSDT-111R-E			MSDF-1111R-E	
Standard Inverter (SUZ & PUHZ-P)		35x1	50x1	60x1	71x1	100x1	125x1	140x1	–	–	–	50x2	60x2	71x2	100x2	125x2	50x3	60x3	71x3	50x4	60x4
	Distribution Pipe	–	–	–	–	–	–	–	–	–	–	MSDD-50TR-E			MSDD-50WR-E		MSDT-111R-E			MSDF-1111R-E	

PLA-ZM SERIES

POWER INVERTER

Type				Inverter Heat Pump									
Indoor Unit				PLA-ZM35EA	PLA-ZM50EA	PLA-ZM60EA	PLA-ZM71EA	PLA-ZM100EA		PLA-ZM125EA		PLA-ZM140EA	
Outdoor Unit				PUHZ-ZRP35VKA2	PUHZ-ZRP50VKA2	PUHZ-ZRP60VHA2	PUHZ-ZRP71VHA2	PUHZ-ZRP100VKA3	PUHZ-ZRP100YKA3	PUHZ-ZRP125VKA3	PUHZ-ZRP125YKA3	PUHZ-ZRP140VKA3	PUHZ-ZRP140YKA3
Refrigerant				R410A*1									
Power Supply	Source			Outdoor power supply									
	Outdoor (V/Phase/Hz)			VKA • VHA:230 / Single / 50, YKA:400 / Three / 50									
Cooling	Capacity	Rated	kW	3.6	5.0	6.1	7.1	9.5	9.5	12.5	12.5	13.4	13.4
		Min - Max	kW	1.6 - 4.5	2.3 - 5.6	2.7 - 6.5	3.3 - 8.1	4.9 - 11.4	4.9 - 11.4	5.5 - 14.0	5.5 - 14.0	6.2 - 15.0	6.2 - 15.0
	Total Input	Rated	kW	0.78	1.33	1.66	1.79	2.20	2.20	3.84	3.84	4.36	4.36
	EER			–	–	–	–	–	–	3.25	3.25	3.07	3.07
	EEL Rank			–	–	–	–	–	–	–	–	–	–
	Design Load		kW	3.6	5.0	6.1	7.1	9.5	9.5	–	–	–	–
	Annual Electricity Consumption*2		kWh/a	170	253	318	336	461	472	–	–	–	–
	SEER*4			7.4	6.9	6.7	7.4	7.2	7.0	–	–	–	–
	Energy Efficiency Class			A++	A++	A++	A++	A++	A++	–	–	–	–
Heating (Average Season)	Capacity	Rated	kW	4.1	6.0	7.0	8.0	11.2	11.2	14.0	14.0	16.0	16.0
		Min - Max	kW	1.6 - 5.2	2.5 - 7.3	2.8 - 8.2	3.5 - 10.2	4.5 - 14.0	4.5 - 14.0	5.0 - 16.0	5.0 - 16.0	5.7 - 18.0	5.7 - 18.0
	Total Input	Rated	kW	0.85	1.55	1.89	1.90	2.60	2.60	3.67	3.67	4.84	4.84
	COP			–	–	–	–	–	–	3.81	3.81	3.30	3.30
	EEL Rank			–	–	–	–	–	–	–	–	–	–
	Design Load		kW	2.5	3.8	4.4	4.7	7.8	7.8	–	–	–	–
	Declared Capacity	at reference design temperature	kW	2.5 (–10°C)	3.8 (–10°C)	4.4 (–10°C)	4.7 (–10°C)	7.8 (–10°C)	7.8 (–10°C)	–	–	–	–
		at bivalent temperature	kW	2.5 (–10°C)	3.8 (–10°C)	4.4 (–10°C)	4.7 (–10°C)	7.8 (–10°C)	7.8 (–10°C)	–	–	–	–
		at operation limit temperature	kW	2.1 (–11°C)	3.7 (–11°C)	2.8 (–20°C)	3.5 (–20°C)	5.8 (–20°C)	5.8 (–20°C)	–	–	–	–
	Back Up Heating Capacity		kW	0	0	0	0	0	0	–	–	–	–
	Annual Electricity Consumption*2		kWh/a	714	1109	1337	1342	2229	2229	–	–	–	–
	SCOP*4			4.9	4.8	4.6	4.9	4.9	4.9	–	–	–	–
	Energy Efficiency Class			A++	A++	A++	A++	A++	A++	–	–	–	–
Operating Current (max)			A	13.2	13.2	19.2	19.3	27.0	8.5	27.0	10.0	28.7	13.7
Indoor Unit	Input	Rated	kW	0.03	0.03	0.03	0.05	0.07	0.07	0.08	0.08	0.10	0.10
	Operating Current (max)		A	0.21	0.22	0.22	0.34	0.47	0.47	0.52	0.52	0.66	0.66
	Dimensions <Panel>	H × W × D	mm	258 - 840 - 840 <40 - 950 - 950>				298 - 840 - 840 <40 - 950 - 950>					
	Weight <Panel>		kg	21 <5>			24 <5>	26 <5>	26 <5>	26 <5>	26 <5>	26 <5>	26 <5>
	Air Volume [Lo-Mi2-Mi1-Hi]		m³/min	11-13-15-16	12-14-16-18	12-14-16-18	17-19-21-23	19-22-25-28	19-22-25-28	21-24-26-29	21-24-26-29	24-26-29-32	24-26-29-32
	Sound Level (SPL) [Lo-Mi2-Mi1-Hi]		dB(A)	26-28-29-31	27-29-31-32	27-29-31-32	28-30-33-36	31-34-37-40	31-34-37-40	33-36-39-41	33-36-39-41	36-39-42-44	36-39-42-44
	Sound Level (PWL)		dB(A)	51	54	54	57	61	61	62	62	65	65
Outdoor Unit	Dimensions	H × W × D	mm	630 - 809 - 300		943 - 950 - 330 (+30)		1338 - 1050 - 330 (+40)					
	Weight		kg	43	46	70	70	116	123	116	125	118	131
	Air Volume	Cooling	m³/min	45	45	55	55	110	110	120	120	120	120
		Heating	m³/min	45	45	55	55	110	110	120	120	120	120
	Sound Level (SPL)	Cooling	dB(A)	44	44	47	47	49	49	50	50	50	50
		Heating	dB(A)	46	46	48	48	51	51	52	52	52	52
	Sound Level (PWL)	Cooling	dB(A)	65	65	67	67	69	69	70	70	70	70
	Operating Current (max)		A	13.0	13.0	19.0	19.0	26.5	8.0	26.5	9.5	28.0	13.0
	Breaker Size		A	16	16	25	25	32	16	32	16	40	16
Ext. Piping	Diameter	Liquid / Gas	mm	6.35 / 12.7	6.35 / 12.7	9.52 / 15.88	9.52 / 15.88	9.52 / 15.88	9.52 / 15.88	9.52 / 15.88	9.52 / 15.88	9.52 / 15.88	9.52 / 15.88
	Max. Length	Out-In	m	50	50	50	50	75	75	75	75	75	75
	Max. Height	Out-In	m	30	30	30	30	30	30	30	30	30	30
Guaranteed Operating Range [Outdoor]		Cooling*3	°C	–15 ~ +46	–15 ~ +46	–15 ~ +46	–15 ~ +46	–15 ~ +46	–15 ~ +46	–15 ~ +46	–15 ~ +46	–15 ~ +46	–15 ~ +46
		Heating	°C	–11 ~ +21	–11 ~ +21	–20 ~ +21	–20 ~ +21	–20 ~ +21	–20 ~ +21	–20 ~ +21	–20 ~ +21	–20 ~ +21	–20 ~ +21

*1 Refrigerant leakage contributes to climate change. Refrigerant with lower global warming potential (GWP) would contribute less to global warming than a refrigerant with higher GWP, if leaked to the atmosphere. This appliance contains a refrigerant fluid with a GWP equal to 1975. This means that if 1 kg of this refrigerant fluid would be leaked to the atmosphere, the impact on global warming would be 1975 times higher than 1 kg of CO_2, over a period of 100 years. Never try to interfere with the refrigerant circuit yourself or disassemble the product yourself and always ask a professional. The GWP of R410A is 2088 in the IPCC 4th Assessment Report.
*2 Energy consumption based on standard test results. Actual energy consumption will depend on how the appliance is used and where it is located.
*3 Optional air protection guide is required where ambient temperature is lower than –5°C.
*4 SEER and SCOP are based on 2009/125/EC:Energy-related Products Directive and Regulation(EU) No206/2012.

PLA-M SERIES

STANDARD INVERTER

Type				Inverter Heat Pump									
Indoor Unit				PLA-M35EA	PLA-M50EA	PLA-M60EA	PLA-M71EA	PLA-M100EA		PLA-M125EA		PLA-M140EA	
Outdoor Unit				SUZ-KA35VA6	SUZ-KA50VA6	SUZ-KA60VA6	SUZ-KA71VA6	PUHZ-P100VKA	PUHZ-P100YKA	PUHZ-P125VKA	PUHZ-P125YKA	PUHZ-P140VKA	PUHZ-P140YKA
Refrigerant				R410A*1									
Power Supply	Source			Outdoor power supply									
	Outdoor (V/Phase/Hz)			VA • VKA:230 / Single / 50, YKA:400 / Three / 50									
Cooling	Capacity	Rated	kW	3.6	5.5	5.7	7.1	9.4	9.4	12.1	12.1	13.6	13.6
		Min - Max	kW	1.4 - 3.9	2.3 - 5.6	2.3 - 6.3	2.8 - 8.1	3.7 - 10.6	3.7 - 10.6	5.6 - 13.0	5.6 - 13.0	5.8 - 14.1	5.8 - 14.1
	Total Input	Rated	kW	1.02	1.61	1.76	2.10	3.18	3.18	4.10	4.10	5.41	5.41
	EER			–	–	–	–	2.95	2.95	2.95	2.95	2.51	2.51
	EEL Rank			–	–	–	–	–	–	–	–	–	–
	Design Load		kW	3.6	5.5	5.7	7.1	9.4	9.4	–	–	–	–
	Annual Electricity Consumption*2		kWh/a	181	295	307	400	538	538	–	–	–	–
	SEER*4			6.9	6.5	6.5	6.2	6.1	6.1	–	–	–	–
	Energy Efficiency Class			A++	A++	A++	A++	A++	A++	–	–	–	–
Heating (Average Season)	Capacity	Rated	kW	4.1	5.8	6.9	8.0	11.2	11.2	13.5	13.5	15.0	15.0
		Min - Max	kW	1.7 - 5.0	1.7 - 7.2	2.5 - 8.0	2.6 - 10.2	2.8 - 12.5	2.8 - 12.5	4.8 - 15.0	4.8 - 15.0	4.9 - 15.8	4.9 - 15.8
	Total Input	Rated	kW	1.00	1.69	1.97	2.24	3.26	3.26	3.84	3.84	4.67	4.67
	COP			–	–	–	–	3.43	3.43	3.51	3.51	3.21	3.21
	EEL Rank			–	–	–	–	–	–	–	–	–	–
	Design Load		kW	2.6	4.3	4.6	5.8	8.0	8.0	–	–	–	–
	Declared Capacity	at reference design temperature	kW	2.3 (–10°C)	3.8 (–10°C)	4.0 (–10°C)	4.7 (–10°C)	6.0 (–10°C)	6.0 (–10°C)	–	–	–	–
		at bivalent temperature	kW	2.3 (–7°C)	3.8 (–7°C)	4.1 (–7°C)	5.1 (–7°C)	7.0 (–7°C)	7.0 (–7°C)	–	–	–	–
		at operation limit temperature	kW	2.3 (–10°C)	3.8 (–10°C)	4.0 (–10°C)	4.7 (–10°C)	4.5 (–15°C)	4.5 (–15°C)	–	–	–	–
	Back Up Heating Capacity		kW	0.3	0.5	0.6	1.1	2.0	2.0	–	–	–	–
	Annual Electricity Consumption*2		kWh/a	826	1505	1498	1888	2432	2432	–	–	–	–
	SCOP*4			4.4	4.0	4.3	4.3	4.6	4.6	–	–	–	–
	Energy Efficiency Class			A+	A+	A+	A+	A++	A++	–	–	–	–
Operating Current (max)			A	8.4	12.2	14.2	16.4	20.5	12.0	27.2	12.2	30.7	12.2
Indoor Unit	Input	Rated	kW	0.03	0.03	0.03	0.04	0.07	0.07	0.10	0.10	0.10	0.10
	Operating Current (max)		A	0.20	0.22	0.24	0.27	0.46	0.46	0.66	0.66	0.66	0.66
	Dimensions <Panel>	H × W × D	mm	258 - 840 - 840 <40 - 950 - 950>				298 - 840 - 840 <40 - 950 - 950>					
	Weight <Panel>		kg	19 <5>	19 <5>	21 <5>	21 <5>	24 <5>	24 <5>	26 <5>	26 <5>	26 <5>	26 <5>
	Air Volume [Lo-Mi2-Mi1-Hi]		m³/min	11-13-15-16	12-14-16-18	12-14-16-18	14-17-19-21	19-23-26-29	19-23-26-29	21-25-28-31	21-25-28-31	24-26-29-32	24-26-29-32
	Sound Level (SPL) [Lo-Mi2-Mi1-Hi]		dB(A)	26-28-29-31	27-29-31-32	27-29-31-32	28-30-32-34	31-34-37-40	31-34-37-40	33-37-41-44	33-37-41-44	36-39-42-44	36-39-42-44
	Sound Level (PWL)		dB(A)	51	54	54	56	61	61	65	65	65	65
Outdoor Unit	Dimensions	H × W × D	mm	550 - 800 - 285		880 - 840 - 330		981 - 1050 - 330					
	Weight		kg	35	54	50	53	76	78	84	85	84	85
	Air Volume	Cooling	m³/min	36.3	44.6	40.9	50.1	79	79	86	86	86	86
		Heating	m³/min	34.8	44.6	49.2	48.2	79	79	92	92	92	92
	Sound Level (SPL)	Cooling	dB(A)	49	52	55	55	51	51	54	54	56	56
		Heating	dB(A)	50	52	55	55	54	54	56	56	57	57
	Sound Level (PWL)	Cooling	dB(A)	62	65	65	69	70	70	72	72	75	75
	Operating Current (max)		A	8.2	12.0	14.0	16.1	20	11.5	26.5	11.5	30.0	11.5
	Breaker Size		A	10	20	20	20	32	16	32	16	40	16
Ext. Piping	Diameter	Liquid / Gas	mm	6.35 / 9.52	6.35 / 12.7	6.35 / 15.88	9.52 / 15.88	9.52 / 15.88	9.52 / 15.88	9.52 / 15.88	9.52 / 15.88	9.52 / 15.88	9.52 / 15.88
	Max. Length	Out-In	m	20	30	30	30	50	50	50	50	50	50
	Max. Height	Out-In	m	12	30	30	30	30	30	30	30	30	30
Guaranteed Operating Range [Outdoor]		Cooling*3	°C	–10 ~ +46	–15 ~ +46	–15 ~ +46	–15 ~ +46	–15 ~ +46	–15 ~ +46	–15 ~ +46	–15 ~ +46	–15 ~ +46	–15 ~ +46
		Heating	°C	–10 ~ +24	–10 ~ +24	–10 ~ +24	–10 ~ +24	–15 ~ +21	–15 ~ +21	–15 ~ +21	–15 ~ +21	–15 ~ +21	–15 ~ +21

*1 Refrigerant leakage contributes to climate change. Refrigerant with lower global warming potential (GWP) would contribute less to global warming than a refrigerant with higher GWP, if leaked to the atmosphere. This appliance contains a refrigerant fluid with a GWP equal to 1975. This means that if 1 kg of this refrigerant fluid would be leaked to the atmosphere, the impact on global warming would be 1975 times higher than 1 kg of CO_2, over a period of 100 years. Never try to interfere with the refrigerant circuit yourself or disassemble the product yourself and always ask a professional. The GWP of R410A is 2088 in the IPCC 4th Assessment Report.
*2 Energy consumption based on standard test results. Actual energy consumption will depend on how the appliance is used and where it is located.
*3 Optional air protection guide is required where ambient temperature is lower than –5°C.
*4 SEER and SCOP are based on 2009/125/EC:Energy-related Products Directive and Regulation(EU) No206/2012.

PLA-M SERIES
POWER INVERTER

i-see Sensor (Optional) | Demand Control (Optional) | Pure White | AUTO VANE | Fresh-air Intake | High-efficiency (Optional) | Long Life | Check! | SWING | High Ceiling | Low Ceiling | AUTO | ACO | Auto Restart | Low Temp Cooling

Silent | Ampere Limit (60-140V/200/250) | Rotation Back-up (Optional) | (Optional) | Group Control | M-NET connection (Optional) | COMPO | Wi-Fi Interface (Optional) | MXZ connection | Cleaning-free Pipe Rear | Wiring Reuse (Optional) | Drain Lift Up | Pump Down | Flare connection | Self Diagnosis | Failure Recall

Type				Inverter Heat Pump									
Indoor Unit				PLA-M35EA	PLA-M50EA	PLA-M60EA	PLA-M71EA	PLA-M100EA		PLA-M125EA		PLA-M140EA	
Outdoor Unit				PUHZ-ZRP35VKA2	PUHZ-ZRP50VKA2	PUHZ-ZRP60VHA2	PUHZ-ZRP71VHA2	PUHZ-ZRP100VKA3	PUHZ-ZRP100YKA3	PUHZ-ZRP125VKA3	PUHZ-ZRP125YKA3	PUHZ-ZRP140VKA3	PUHZ-ZRP140YKA3
Refrigerant				R410A*1									
Power Supply	Source			Outdoor power supply									
	Outdoor (V/Phase/Hz)			VKA・VHA:230 / Single / 50, YKA:400 / Three / 50									
Cooling	Capacity	Rated	kW	3.6	5.0	6.1	7.1	9.5	9.5	12.5	12.5	13.4	13.4
		Min - Max	kW	1.6 - 4.5	2.3 - 5.6	2.7 - 6.5	3.3 - 8.1	4.9 - 11.4	4.9 - 11.4	5.5 - 14.0	5.5 - 14.0	6.2 - 15.0	6.2 - 15.0
	Total Input	Rated	kW	0.83	1.42	1.75	1.87	2.23	2.23	3.87	3.87	4.39	4.39
	EER			–	–	–	–	–	–	3.23	3.23	3.05	3.05
		EEL Rank		–	–	–	–	–	–	–	–	–	–
	Design Load		kW	3.6	5.0	6.1	7.1	9.5	9.5	–	–	–	–
	Annual Electricity Consumption*2		kWh/a	174	258	321	341	465	476	–	–	–	–
	SEER*4			7.2	6.7	6.6	7.2	7.1	6.9	–	–	–	–
		Energy Efficiency Class		A++	A++	A++	A++	A++	A++	–	–	–	–
Heating (Average Season)	Capacity	Rated	kW	4.1	6.0	7.0	8.0	11.2	11.2	14.0	14.0	16.0	16.0
		Min - Max	kW	1.6 - 5.8	2.5 - 7.3	2.8 - 8.2	3.5 - 10.2	4.5 - 14.0	4.5 - 14.0	5.0 - 16.0	5.0 - 16.0	5.7 - 18.0	5.7 - 18.0
	Total Input	Rated	kW	0.92	1.81	2.07	2.11	2.69	2.69	3.77	3.77	4.90	4.90
	COP			–	–	–	–	–	–	3.71	3.71	3.26	3.26
		EEL Rank		–	–	–	–	–	–	–	–	–	–
	Design Load		kW	2.5	3.8	4.4	4.7	7.8	7.8	–	–	–	–
	Declared Capacity	at reference design temperature	kW	2.5 (–10°C)	3.8 (–10°C)	4.4 (–10°C)	4.7 (–10°C)	7.8 (–10°C)	7.8 (–10°C)	–	–	–	–
		at bivalent temperature	kW	2.5 (–10°C)	3.8 (–10°C)	4.4 (–10°C)	4.7 (–10°C)	7.8 (–10°C)	7.8 (–10°C)	–	–	–	–
		at operation limit temperature	kW	2.1 (–11°C)	3.7 (–11°C)	2.8 (–20°C)	3.5 (–20°C)	5.8 (–20°C)	5.8 (–20°C)	–	–	–	–
	Back Up Heating Capacity		kW	0	0	0	0	0	0	–	–	–	–
	Annual Electricity Consumption*2		kWh/a	764	1212	1418	1402	2468	2468	–	–	–	–
	SCOP*4			4.5	4.3	4.3	4.6	4.4	4.4	–	–	–	–
		Energy Efficiency Class		A+	A+	A+	A++	A+	A+	–	–	–	–
Operating Current (max)			A	13.2	13.2	19.2	19.3	27.0	8.5	27.2	10.2	28.7	13.7
Indoor Unit	Input	Rated	kW	0.03	0.03	0.03	0.04	0.07	0.07	0.10	0.10	0.10	0.10
	Operating Current (max)		A	0.20	0.22	0.24	0.27	0.46	0.46	0.66	0.66	0.66	0.66
	Dimensions <Panel>	H x W x D	mm	258 - 840 - 840 <40 - 950 - 950>				298 - 840 - 840 <40 - 950 - 950>					
	Weight <Panel>		kg	19 <5>	19 <5>	21 <5>	21 <5>	24 <5>	24 <5>	26 <5>	26 <5>	26 <5>	26 <5>
	Air Volume [Lo-Mi2-Mi1-Hi]		m^3/min	11-13-15-16	12-14-16-18	12-14-16-18	14-17-19-21	19-23-26-29	19-23-26-29	21-25-28-31	21-25-28-31	24-26-29-32	24-26-29-32
	Sound Level (SPL) [Lo-Mi2-Mi1-Hi]		dB(A)	26-28-29-31	27-29-31-32	27-29-31-32	28-30-32-34	31-34-37-40	31-34-37-40	33-37-41-44	33-37-41-44	36-39-42-44	36-39-42-44
	Sound Level (PWL)		dB(A)	51	54	54	56	61	61	65	65	65	65
Outdoor Unit	Dimensions	H x W x D	mm	630 - 809 - 300		943 - 950 - 330 (+30)		1338 - 1050 - 330 (+40)					
	Weight		kg	43	46	70	70	116	123	116	125	118	131
	Air Volume	Cooling	m^3/min	45	45	55	55	110	110	120	120	120	120
		Heating	m^3/min	45	45	55	55	110	110	120	120	120	120
	Sound Level (SPL)	Cooling	dB(A)	44	44	47	47	49	49	50	50	50	50
		Heating	dB(A)	46	46	48	48	51	51	52	52	52	52
	Sound Level (PWL)	Cooling	dB(A)	65	65	67	67	69	69	70	70	70	70
	Operating Current (max)		A	13.0	13.0	19.0	19.0	26.5	8.0	26.5	9.5	28.0	13.0
	Breaker Size		A	16	16	25	25	32	16	32	16	40	16
Ext. Piping	Diameter	Liquid / Gas	mm	6.35 / 12.7	6.35 / 12.7	9.52 / 15.88	9.52 / 15.88	9.52 / 15.88	9.52 / 15.88	9.52 / 15.88	9.52 / 15.88	9.52 / 15.88	9.52 / 15.88
	Max. Length	Out-In	m	50	50	50	50	75	75	75	75	75	75
	Max. Height	Out-In	m	30	30	30	30	30	30	30	30	30	30
Guaranteed Operating Range [Outdoor]		Cooling*3	°C	–15 ~ +46	–15 ~ +46	–15 ~ +46	–15 ~ +46	–15 ~ +46	–15 ~ +46	–15 ~ +46	–15 ~ +46	–15 ~ +46	–15 ~ +46
		Heating	°C	–11 ~ +21	–11 ~ +21	–20 ~ +21	–20 ~ +21	–20 ~ +21	–20 ~ +21	–20 ~ +21	–20 ~ +21	–20 ~ +21	–20 ~ +21

*1 Refrigerant leakage contributes to climate change. Refrigerant with lower global warming potential (GWP) would contribute less to global warming than a refrigerant with higher GWP, if leaked to the atmosphere. This appliance contains a refrigerant fluid with a GWP equal to 1975. This means that if 1 kg of this refrigerant fluid would be leaked to the atmosphere, the impact on global warming would be 1975 times higher than 1 kg of CO_2, over a period of 100 years. Never try to interfere with the refrigerant circuit yourself or disassemble the product yourself and always ask a professional. The GWP of R410A is 2088 in the IPCC 4th Assessment Report.
*2 Energy consumption based on standard test results. Actual energy consumption will depend on how the appliance is used and where it is located.
*3 Optional air protection guide is required where ambient temperature is lower than –5°C.
*4 SEER and SCOP are based on 2009/125/EC:Energy-related Products Directive and Regulation(EU) No206/2012.

PEAD SERIES

PEAD-M35/50/60/71/100/125/140JA(L)

The thin, ceiling-concealed indoor units of this series are the perfect answer for the air conditioning needs of buildings with minimum ceiling installation space and wide-ranging external static pressure. Energy-saving efficiency has been improved, reducing electricity consumption and contributing to a further reduction in operating cost.

Compact Indoor Units

The height of the models from 35–140 has been unified to 250mm, which makes installation in low ceilings with minimal clearance space possilbe.

PEAD-M JA(L)

External Static Pressure

External static pressure conversion can be set up to five stages. Capable of being set to a maximum of 150Pa, units are applicable to a wide range of building types.

ErP Lot 10-compliant, Achieving High Energy Efficiency of SEER/SCOP Rank A+ and A++

A direct-current (DC) fan motor is installed in the indoor unit, increasing the seasonal energy efficiency of the newly designed Power Inverter Series (PUHZ-ZRP) and resulting in compliance of the full-capacity models with ErP Lot 10 and energy rankings of A+/A++ for cooling and A/A+ for heating. This contributes to an impressive reduction in the cost of annual electricity.

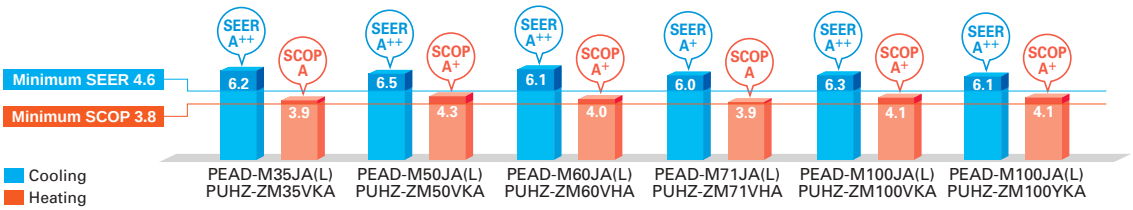

Drain Pump Option Available with All Models

The line-up consists of two types, models with or without a built-in drain pump.

PEAD-M JA → Drain pump built-in

PEAD-M JAL → No drain pump

✻ Units with an "L" included at the end of the model name are not equipped with a drain pump.

SERIES SELECTION

Power Inverter Series

Indoor Unit

PEAD-M35/50/60/71/100/125/140

Outdoor Unit

For Single

PUZ-ZM35/50 PUZ-ZM60/71 PUZ-ZM100/125/140

For Multi
(Twin/Triple/Quadruple)

PUZ-ZM71 PUZ-ZM100/125/140/200/250

Remote Controller

Optional

Optional

Optional

Optional

PEAD-M JA Indoor Unit Combinations

Indoor unit combinations shown below are possible.

Indoor Unit Combination		Outdoor Unit Capacity																			
		For Single									For Twin						For Triple			For Quadruple	
		35	50	60	71	100	125	140	200	250	71	100	125	140	200	250	140	200	250	200	250
Power Inverter (PUHZ-ZRP)		35x1	50x1	60x1	71x1	100x1	125x1	140x1	–	–	35x2	50x2	60x2	71x2	100x2	125x2	50x3	60x3	71x3	50x4	60x4
	Distribution Pipe	–	–	–	–	–	–	–	–	–	MSDD-50TR2-E				MSDD-50WR2-E		MSDT-111R3-E			MSDF-1111R2-E	

SERIES SELECTION

Standard Inverter Series

Indoor Unit

PEAD-M35/50/60/71/100/125/140

Outdoor Unit

For Single

SUZ-M35 SUZ-M50 SUZ-M60/71 PUZ-M100/125/140

For Multi
(Twin/Triple/Quadruple)

PUZ-M100/125/140 PUZ-M200/250

Remote Controller

Optional

Optional

Optional

Optional

PEAD-M JA Indoor Unit Combinations

Indoor unit combinations shown below are possible.

Indoor Unit Combination		Outdoor Unit Capacity																			
		For Single									For Twin						For Triple			For Quadruple	
		35	50	60	71	100	125	140	200	250	71	100	125	140	200	250	140	200	250	200	250
Standard Inverter (PUHZ-P&SUZ)		35x1	50x1	60x1	71x1	100x1	125x1	140x1	–	–	–	50x2	60x2	71x2	100x2	125x2	50x3	60x3	71x3	50x4	60x4
	Distribution Pipe	–	–	–	–	–	–	–	–	–	–	MSDD-50TR2-E			MSDD-50WR2-E		MSDT-111R3-E			MSDF-1111R2-E	

PEAD-M SERIES
POWER INVERTER

Demand Control (Optional) | Long Life | Check! | AUTO | ACO | Auto Restart | Low Temp Cooling | Silent | Ampere Limit (60-140V/200/250) | Rotation Back-up (PUHZ, Optional) | (Optional) | Group Control | M-NET connection (Optional) | Wi-Fi Interface (Optional) | COMPO

Cleaning-free pipe reuse | Wiring Reuse (Optional) | Drain Lift Up (JAQ) | Pump Down | Flare connection | Self Diagnosis | Failure Recall

Type				Inverter Heat Pump									
Indoor Unit				PEAD-M35JA(L)	PEAD-M50JA(L)	PEAD-M60JA(L)	PEAD-M71JA(L)	PEAD-M100JA(L)		PEAD-M125JA(L)		PEAD-M140JA(L)	
Outdoor Unit				PUZ-ZM35VKA	PUZ-ZM50VKA	PUZ-ZM60VHA	PUZ-ZM71VHA	PUZ-ZM100VKA	PUZ-ZM100YKA	PUZ-ZM125VKA	PUZ-ZM125YKA	PUZ-ZM140VKA	PUZ-ZM140YKA
Refrigerant				R32*1									
Power Supply	Source			Outdoor power supply									
	Outdoor (V/Phase/Hz)			VKA・VHA:230 / Single / 50, YKA:400 / Three / 50									
Cooling	Capacity	Rated	kW	3.6	5.0	6.1	7.1	9.5	9.5	12.5	12.5	13.4	13.4
		Min - Max	kW	1.6 - 4.5	2.3 - 5.6	2.7 - 6.7	3.3 - 8.1	4.9 - 11.4	4.9 - 11.4	5.5 - 14.0	5.5 - 14.0	6.2 - 15.3	6.2 - 15.3
	Total Input	Rated	kW	0.837(0.820)	1.201(1.187)	1.509(1.495)	1.858(1.844)	2.272(2.256)	2.272(2.256)	3.333(3.315)	3.333(3.315)	3.631(3.611)	3.631(3.611)
	EER*4			4.30(4.39)	4.16(4.21)	4.04(4.08)	3.82(3.85)	4.18(4.21)	4.18(4.21)	3.75(3.77)	3.75(3.77)	3.69(3.71)	3.69(3.71)
		EEL Rank		–	–	–	–	–	–	–	–	–	–
	Design Load		kW	3.6	5.0	6.1	7.1	9.5	9.5	–	–	–	–
	Annual Electricity Consumption*2		kWh/a	217(201)	282(268)	350(337)	428(414)	534(521)	543(532)	–	–	–	–
	SEER*4,*5			5.8(6.2)	6.2(6.5)	6.1(6.3)	5.8(6.0)	6.2(6.3)	6.1(6.2)	–	–	–	–
		Energy Efficiency Class		$A^{+}(A^{++})$	$A^{++}(A^{++})$	$A^{++}(A^{++})$	$A^{+}(A^{+})$	$A^{++}(A^{++})$	$A^{++}(A^{++})$	–	–	–	–
Heating (Average Season)	Capacity	Rated	kW	4.1	6.0	7.0	8.0	11.2	11.2	14.0	14.0	16.0	16.0
		Min - Max	kW	1.6 - 5.2	2.5 - 7.3	2.8 - 8.2	3.5 - 10.2	4.5 - 14.0	4.5 - 14.0	5.0 - 16.0	5.0 - 16.0	5.7 - 18.0	5.7 - 18.0
	Total Input	Rated	kW	0.917	1.312	1.616	1.932	2.598	2.598	3.349	3.349	3.970	3.970
	COP*4			4.47	4.57	4.33	4.14	4.31	4.31	4.18	4.18	4.03	4.03
		EEL Rank		–	–	–	–	–	–	–	–	–	–
	Design Load		kW	2.4	3.8	4.4	4.9	7.8	7.8	–	–	–	–
	Declared Capacity	at reference design temperature	kW	2.4(–10°C)	3.8(–10°C)	4.4(–10°C)	4.9(–10°C)	7.8(–10°C)	7.8(–10°C)	–	–	–	–
		at bivalent temperature	kW	2.4(–10°C)	3.8(–10°C)	4.4(–10°C)	4.9(–10°C)	7.8(–10°C)	7.8(–10°C)	–	–	–	–
		at operation limit temperature	kW	2.2(–11°C)	3.7(–11°C)	2.8(–20°C)	3.7(–20°C)	5.8(–20°C)	5.8(–20°C)	–	–	–	–
	Back Up Heating Capacity		kW	0	0	0	0	0	0	–	–	–	–
	Annual Electricity Consumption*2		kWh/a	858	1237	1540	1751	2666	2666	–	–	–	–
	SCOP*4,*5			3.9	4.3	4.0	3.9	4.1	4.1	–	–	–	–
		Energy Efficiency Class		A	A^{+}	A^{+}	A	A^{+}	A^{+}	–	–	–	–
Operating Current (max)			A	14.1	14.4	20.6	21.0	29.2	10.7	29.3	12.3	30.8	15.8
Indoor Unit	Input [Cooling / Heating]	Rated	kW	0.09/0.07	0.11/0.09	0.12/0.10	0.17/0.15	0.25/0.23	0.25/0.23	0.36/0.34	0.36/0.34	0.39/0.37	0.39/0.37
	Operating Current (max)		A	1.07	1.39	1.62	1.97	2.65	2.65	2.76	2.76	2.78	2.78
	Dimensions <Panel>	H × W × D	mm	250-900-732		250-1100-732		250-1400-732				250-1600-732	
	Weight <Panel>		kg	26(25)	27(26)	30(29)	30(29)	39(38)	39(38)	40(39)	40(39)	44(43)	44(43)
	Air Volume [Lo-Mid-Hi]		m^3/min	10.0-12.0-14.0	12.0-14.5-17.0	14.5-18.0-21.0	17.5-21.0-25.0	24.0-29.0-34.0	24.0-29.0-34.0	29.5-35.5-42.0	29.5-35.5-42.0	32.0-39.0-46.0	32.0-39.0-46.0
	External Static Pressure		Pa	35 / 50 / 70 / 100 / 150									
	Sound Level (SPL) [Lo-Mid-Hi]		dB(A)	23 - 27 - 30	26 - 31 - 35	25 - 29 - 33	26 - 30 - 34	29 - 34 - 38	29 - 34 - 38	33 - 36 - 40	33 - 36 - 40	34 - 38 - 43	34 - 38 - 43
	Sound Level (PWL)		dB(A)	54	59	55	58	62	62	66	66	67	67
Outdoor Unit	Dimensions	H × W × D	mm	630 - 809 - 300		943 - 950 - 330(+25)		1338 - 1050 - 330(+40)					
	Weight		kg	46	46	70	70	116	123	116	125	118	131
	Air Volume	Cooling	m^3/min	45	45	55	55	110	110	120	120	120	120
		Heating	m^3/min	45	45	55	55	110	110	120	120	120	120
	Sound Level (SPL)	Cooling	dB(A)	44	44	47	47	49	49	50	50	50	50
		Heating	dB(A)	46	46	49	49	51	51	52	52	52	52
	Sound Level (PWL)	Cooling	dB(A)	65	65	67	67	69	69	70	70	70	70
	Operating Current (max)		A	13.0	13.0	19.0	19.0	26.5	8.0	26.5	9.5	28.0	13.0
	Breaker Size		A	16	16	25	25	32	16	32	16	40	16
Ext. Piping	Diameter	Liquid / Gas	mm	6.35 / 12.7	6.35 / 12.7	9.52 / 15.88	9.52 / 15.88	9.52 / 15.88	9.52 / 15.88	9.52 / 15.88	9.52 / 15.88	9.52 / 15.88	9.52 / 15.88
	Max. Length	Out-In	m	50	50	55	55	100	100	100	100	100	100
	Max. Height	Out-In	m	30	30	30	30	30	30	30	30	30	30
Guaranteed Operating Range [Outdoor]		Cooling*3	°C	–15 ~ +46	–15 ~ +46	–15 ~ +46	–15 ~ +46	–15 ~ +46	–15 ~ +46	–15 ~ +46	–15 ~ +46	–15 ~ +46	–15 ~ +46
		Heating	°C	–11 ~ +21	–11 ~ +21	–20 ~ +21	–20 ~ +21	–20 ~ +21	–20 ~ +21	–20 ~ +21	–20 ~ +21	–20 ~ +21	–20 ~ +21

*1 Refrigerant leakage contributes to climate change. Refrigerant with lower global warming potential (GWP) would contribute less to global warming than a refrigerant with higher GWP, if leaked to the atmosphere. This appliance contains a refrigerant fluid with a GWP equal to 550. This means that if 1 kg of this refrigerant fluid would be leaked to the atmosphere, the impact on global warming would be 550 times higher than 1 kg of CO_2, over a period of 100 years. Never try to interfere with the refrigerant circuit yourself or disassemble the product yourself and always ask a professional. The GWP of R32 is 675 in the IPCC 4th Assessment Report.
*2 Energy consumption based on standard test results. Actual energy consumption will depend on how the appliance is used and where it is located.
*3 Optional air protection guide is required where ambient temperature is lower than –5°C. *4 EER/COP and SEER/SCOP for M35-71 are measured at ESP 35Pa, for M100 at ESP 37Pa, for M125/140 at ESP 50Pa.
*5 SEER and SCOP are based on 2009/125/EC:Energy-related Products Directive and Regulation(EU) No206/2012.

PEAD-M SERIES
STANDARD INVERTER

Demand Control (Optional) | Long Life | Check! | AUTO | ACO | Auto Restart | Low Temp Cooling | Silent | Ampere Limit (60-140V/200/250) | Rotation Back-up (PUHZ, Optional) | (Optional) | Group Control | M-NET connection (Optional) | Wi-Fi Interface (Optional) | COMPO

Cleaning-free pipe reuse | Wiring Reuse (Optional) | Drain Lift Up (JAQ) | Pump Down | Flare connection | Self Diagnosis | Failure Recall

Type				Inverter Heat Pump									
Indoor Unit				PEAD-M35JA(L)	PEAD-M50JA(L)	PEAD-M60JA(L)	PEAD-M71JA(L)	PEAD-M100JA(L)		PEAD-M125JA(L)		PEAD-M140JA(L)	
Outdoor Unit				SUZ-M35VA	SUZ-M50VA	SUZ-M60VA	SUZ-M71VA	PUZ-M100VKA	PUZ-M100YKA	PUZ-M125VKA	PUZ-M125YKA	PUZ-M140VKA	PUZ-ZM140YKA
Refrigerant				R32*1									
Power Supply	Source			Outdoor power supply									
	Outdoor (V/Phase/Hz)			VA・VKA: 230 / Single / 50, YKA: 400 / Three / 50									
Cooling	Capacity	Rated	kW	3.6	5.0	6.1	7.1	9.5	9.5	12.1	12.1	13.4	13.4
		Min - Max	kW	0.8 - 3.9	1.7 - 5.6	1.6 - 6.3	2.2 - 8.1	4.0 - 10.6	4.0 - 10.6	6.0 - 13.0	6.0 - 13.0	6.1 - 14.1	6.1 - 14.1
	Total Input	Rated	kW	0.92(0.90)	1.35(1.33)	1.69(1.67)	2.02(2.00)	2.87(2.85)	2.87(2.85)	4.01(3.99)	4.01(3.99)	4.76	4.76
	EER*4			3.90(4.00)	3.70(3.75)	3.60(3.65)	3.50(3.55)	3.30(3.33)	3.30(3.33)	3.01(3.03)	3.01(3.03)	2.81	2.81
		EEL Rank		–	–	–	–	–	–	–	–	–	–
	Design Load		kW	3.6	5.0	6.1	7.1	9.5	9.5	12.1	12.1	13.4	13.4
	Annual Electricity Consumption*2		kWh/a	217(199)	287(271)	353(335)	428(411)	613(598)	613(598)	–	–	–	–
	SEER*4,*5			5.8(6.3)	6.1(6.4)	6.0(6.3)	5.8(6.0)	5.4(5.5)	5.4(5.5)	–	–	–	–
		Energy Efficiency Class		$A^{+}(A^{++})$	$A^{++}(A^{++})$	$A^{+}(A^{++})$	$A^{+}(A^{+})$	A (A)	A (A)	–	–	–	–
Heating (Average Season)	Capacity	Rated	kW	4.1	6.0	7.0	8.0	11.2	11.2	13.5	13.5	15.0	15.0
		Min - Max	kW	1.1 - 5.0	1.5 - 7.2	1.6 - 8.0	2.0 - 10.2	2.8 - 12.5	2.8 - 12.5	4.1 - 15.0	4.1 - 15.0	4.2 - 15.8	4.2 - 15.8
	Total Input	Rated	kW	1.02	1.46	1.84	2.15	2.94	2.94	3.73	3.73	4.15	4.15
	COP*4			4.00	4.10	3.80	3.71	3.80	3.80	3.61	3.61	3.61	3.61
		EEL Rank		–	–	–	–	–	–	–	–	–	–
	Design Load		kW	2.6	4.3	4.6	5.8	8.0	8.0	8.5	8.5	9.4	9.4
	Declared Capacity	at reference design temperature	kW	2.3(–10°C)	3.8(–10°C)	4.1(–10°C)	5.2(–10°C)	6.0(–10°C)	6.0(–10°C)	8.5(–10°C)	8.5(–10°C)	9.4(–10°C)	9.4(–10°C)
		at bivalent temperature	kW	2.3(–7°C)	3.8(–7°C)	4.1(–7°C)	5.2(–7°C)	7.0(–7°C)	7.0(–7°C)	8.5(–10°C)	8.5(–10°C)	9.4(–10°C)	9.4(–10°C)
		at operation limit temperature	kW	2.3(–10°C)	3.8(–10°C)	4.1(–10°C)	5.2(–10°C)	4.5(–15°C)	4.5(–15°C)	6.0(–15°C)	6.0(–15°C)	7.0(–15°C)	7.0(–15°C)
	Back Up Heating Capacity		kW	0.5	0.5	0.5	0.6	2.0	2.0	–	–	–	–
	Annual Electricity Consumption*2		kWh/a	931	1430	1594	2080	2795	2795	–	–	–	–
	SCOP*4,*5			3.9	4.2	4.0	3.9	4.0	4.0	–	–	–	–
		Energy Efficiency Class		A	A^{+}	A^{+}	A	A^{+}	A^{+}	–	–	–	–
Operating Current (max)			A	9.6	14.9	16.4	16.8	22.7	14.2	29.3	14.3	32.8	14.3
Indoor Unit	Input [Cooling / Heating]	Rated	kW	0.09(0.07)/0.07	0.11(0.09)/0.09	0.12(0.10)/0.10	0.17(0.15)/0.15	0.25(0.23)/0.23	0.25(0.23)/0.23	0.36(0.34)/0.34	0.36(0.34)/0.34	0.39(0.37)/0.37	0.39(0.37)/0.37
	Operating Current (max)		A	1.07	1.39	1.62	1.97	2.65	2.65	2.76	2.76	2.78	2.78
	Dimensions <Panel>	H × W × D	mm	250-900-732		250-1100-732		250-1400-732				250-1600-732	
	Weight <Panel>		kg	26(25)	27(26)	30(29)	30(29)	39(38)	39(38)	40(39)	40(39)	44(43)	44(43)
	Air Volume [Lo-Mid-Hi]		m^3/min	10.0-12.0-14.0	12.0-14.5-17.0	14.5-18.0-21.0	17.5-21.0-25.0	24.0-29.0-34.0	24.0-29.0-34.0	29.5-35.5-42.0	29.5-35.5-42.0	32.0-39.0-46.0	32.0-39.0-46.0
	External Static Pressure		Pa	35 / 50 / 70 / 100 / 150									
	Sound Level (SPL) [Lo-Mid-Hi]		dB(A)	23 - 27 - 30	26 - 31 - 35	25 - 29 - 33	26 - 30 - 34	29 - 34 - 38	29 - 34 - 38	33 - 36 - 40	33 - 36 - 40	34 - 38 - 43	34 - 38 - 43
	Sound Level (PWL)		dB(A)	54	59	55	58	62	62	66	66	67	67
Outdoor Unit	Dimensions	H × W × D	mm	550 - 800 - 285	714 - 800 - 285	880 - 840 - 330		981 - 1050 - 330	981 - 1050 - 330(+40)				
	Weight		kg	35	41	54	55	76	78	84	85	84	85
	Air Volume	Cooling	m^3/min	34.3	45.8	50.1	50.1	79.0	79.0	86.0	86.0	86.0	86.0
		Heating	m^3/min	32.7	43.7	50.1	50.1	79.0	79.0	92.0	92.0	92.0	92.0
	Sound Level (SPL)	Cooling	dB(A)	48	48	49	49	51	51	54	54	55	55
		Heating	dB(A)	48	49	51	51	54	54	56	56	57	57
	Sound Level (PWL)	Cooling	dB(A)	59	64	65	66	70	70	72	72	73	73
	Operating Current (max)		A	8.5	13.5	14.8	14.8	20.0	11.5	26.5	11.5	30.0	11.5
	Breaker Size		A	16	20	20	20	32	16	32	16	40	16
Ext. Piping	Diameter	Liquid / Gas	mm	6.35 / 9.52	6.35 / 12.7	6.35 / 15.88	9.52 / 15.88	9.52 / 15.88	9.52 / 15.88	9.52 / 15.88	9.52 / 15.88	9.52 / 15.88	9.52 / 15.88
	Max. Length	Out-In	m	20	30	30	30	55	55	65	65	65	65
	Max. Height	Out-In	m	12	30	30	30	30	30	30	30	30	30
Guaranteed Operating Range [Outdoor]		Cooling*3	°C	–10 ~ +46	–15 ~ +46	–15 ~ +46	–15 ~ +46	–15 ~ +46	–15 ~ +46	–15 ~ +46	–15 ~ +46	–15 ~ +46	–15 ~ +46
		Heating	°C	–10 ~ +24	–10 ~ +24	–10 ~ +24	–10 ~ +24	–15 ~ +21	–15 ~ +21	–15 ~ +21	–15 ~ +21	–15 ~ +21	–15 ~ +21

*1 Refrigerant leakage contributes to climate change. Refrigerant with lower global warming potential (GWP) would contribute less to global warming than a refrigerant with higher GWP, if leaked to the atmosphere. This appliance contains a refrigerant fluid with a GWP equal to 550. This means that if 1 kg of this refrigerant fluid would be leaked to the atmosphere, the impact on global warming would be 550 times higher than 1 kg of CO_2, over a period of 100 years. Never try to interfere with the refrigerant circuit yourself or disassemble the product yourself and always ask a professional. The GWP of R32 is 675 in the IPCC 4th Assessment Report.
*2 Energy consumption based on standard test results. Actual energy consumption will depend on how the appliance is used and where it is located.
*3 Optional air protection guide is required where ambient temperature is lower than –5°C. *4 EER/COP and SEER/SCOP for M35-71 are measured at ESP 35Pa, for M100 at ESP 37Pa, for M125/140 at ESP 50Pa.
*5 SEER and SCOP are based on 2009/125/EC:Energy-related Products Directive and Regulation(EU) No206/2012.

SERIES SELECTION

Power Inverter Series

DC Inverter | 35-71 Joint Lap | Vector Sine Wave | 100-250 DC Scroll | DC Fan Motor | Vector-Wave | 35-140 PAM | Power Receiver | Grooved Piping | 35-71 Heat Caulking Fixing Method

Indoor Unit

R410A

PEAD-M35/50/60/71/100/125/140

Outdoor Unit

R410A

For Single

PUHZ-ZRP35/50

PUHZ-ZRP60/71

PUHZ-ZRP100/125/140

R410A

For Multi
(Twin/Triple/Quadruple)

PUHZ-ZRP71

PUHZ-ZRP100/125/140/200/250

Remote Controller

Optional

Optional

Optional

Optional

Standard Inverter Series

DC Inverter | 35-71 Joint Lap | 100-250 Vector Sine Wave | 71-140 DC Rotary | 200/250 DC Scroll | DC Fan Motor | 100-250 Vector-Wave | 35-140 PAM | Grooved Piping | 35-71 Heat Caulking Fixing Method

Indoor Unit

R410A

PEAD-M35/50/60/71/100/125/140

Outdoor Unit

R410A

For Single

SUZ-KA35

SUZ-KA50/60/71

PUHZ-P100/125/140

R410A

For Multi
(Twin/Triple/Quadruple)

PUHZ-P100/125/140

PUHZ-P200/250

Remote Controller

Optional

Optional

Optional

Optional

PEAD-M JA(L) Indoor Unit Combinations

Indoor unit combinations shown below are possible.

Indoor Unit Combination		Outdoor Unit Capacity																			
		For Single									For Twin						For Triple			For Quadruple	
		35	50	60	71	100	125	140	200	250	71	100	125	140	200	250	140	200	250	200	250
Power Inverter (PUHZ-ZRP)		35x1	50x1	60x1	71x1	100x1	125x1	140x1	–	–	35x2	50x2	60x2	71x2	100x2	125x2	50x3	60x3	71x3	50x4	60x4
	Distribution Pipe	–	–	–	–	–	–	–	–	–	MSDD-50TR-E				MSDD-50WR-E		MSDT-111R-E			MSDF-1111R-E	
Standard Inverter (PUHZ-P&SUZ)		35x1	50x1	60x1	71x1	100x1	125x1	140x1	–	–	–	50x2	60x2	71x2	100x2	125x2	50x3	60x3	71x3	50x4	60x4
	Distribution Pipe	–	–	–	–	–	–	–	–	–	–	MSDD-50TR-E			MSDD-50WR-E		MSDT-111R-E			MSDF-1111R-E	

PEAD-M SERIES
POWER INVERTER

Demand Control (Optional) | Long Life | Check! | AUTO | ACO | Auto Restart | Low Temp Cooling | Silent | Ampere Limit (60-140V/200/250) | Rotation Back-up (PUHZ, Optional) | (Optional) | Group Control | M-NET connection (Optional) | Wi-Fi Interface (Optional) | COMPO

Cleaning-free pipe reuse | Wiring Reuse (Optional) | Drain Lift Up (JAQ) | Pump Down | Flare connection | Self Diagnosis | Failure Recall

Type				Inverter Heat Pump									
Indoor Unit				PEAD-M35JA(L)	PEAD-M50JA(L)	PEAD-M60JA(L)	PEAD-M71JA(L)	PEAD-M100JA(L)		PEAD-M125JA(L)		PEAD-M140JA(L)	
Outdoor Unit				PUHZ-ZRP35VKA2	PUHZ-ZRP50VKA2	PUHZ-ZRP60VHA2	PUHZ-ZRP71VHA2	PUHZ-ZRP100VKA3	PUHZ-ZRP100YKA3	PUHZ-ZRP125VKA3	PUHZ-ZRP125YKA3	PUHZ-ZRP140VKA3	PUHZ-ZRP140YKA3
Refrigerant				R410A*1									
Power Supply	Source			Outdoor power supply									
	Outdoor (V/Phase/Hz)			VKA・VHA:230 / Single / 50, YKA:400 / Three / 50									
Cooling	Capacity	Rated	kW	3.6	5.0	6.1	7.1	9.5	9.5	12.5	12.5	13.4	13.4
		Min - Max	kW	1.6 - 4.5	2.3 - 5.6	2.7 - 6.7	3.3 - 8.1	4.9 - 11.4	4.9 - 11.4	5.5 - 14.0	5.5 - 14.0	6.2 - 15.3	6.2 - 15.3
	Total Input	Rated	kW	0.89 (0.87)	1.44 (1.42)	1.65 (1.63)	2.01 (1.99)	2.43 (2.41)	2.43 (2.41)	3.86 (3.83)	3.86 (3.83)	4.32 (4.29)	4.32 (4.29)
	EER*4			–	–	–	–	–	–	3.24 (3.26)	3.24 (3.26)	3.10 (3.12)	3.10 (3.12)
	EEL Rank			–	–	–	–	–	–	–	–	–	–
	Design Load		kW	3.6	5.0	6.1	7.1	9.5	9.5	–	–	–	–
	Annual Electricity Consumption*2		kWh/a	221(205)	304(288)	355(340)	428(411)	554(543)	565(554)	–	–	–	–
	SEER*4, *5			5.7(6.1)	5.7(6.0)	6.0(6.2)	5.8(6.0)	6.0(6.1)	5.8(6.0)	–	–	–	–
	Energy Efficiency Class			A+ (A++)	A+ (A+)	A+ (A++)	A+ (A+)	A+ (A++)	A+ (A+)	–	–	–	–
Heating (Average Season)	Capacity	Rated	kW	4.1	6.0	7.0	8.0	11.2	11.2	14.0	14.0	16.0	16.0
		Min - Max	kW	1.6 - 5.2	2.5 - 7.3	2.8 - 8.2	3.5 - 10.2	4.5 - 14.0	4.5 - 14.0	5.0 - 16.0	5.0 - 16.0	5.7 - 18.0	5.7 - 18.0
	Total Input	Rated	kW	0.95	1.50	1.79	2.03	2.60	2.60	3.51	3.51	4.07	4.07
	COP*4			–	–	–	–	–	–	3.99	3.99	3.93	3.93
	EEL Rank			–	–	–	–	–	–	–	–	–	–
	Design Load		kW	2.4	3.8	4.4	4.9	7.8	7.8	–	–	–	–
	Declared Capacity	at reference design temperature	kW	2.4 (–10°C)	3.8 (–10°C)	4.4 (–10°C)	4.9 (–10°C)	7.8 (–10°C)	7.8 (–10°C)	–	–	–	–
		at bivalent temperature	kW	2.4 (–10°C)	3.8 (–10°C)	4.4 (–10°C)	4.9 (–10°C)	7.8 (–10°C)	7.8 (–10°C)	–	–	–	–
		at operation limit temperature	kW	2.2 (–11°C)	3.7 (–11°C)	2.8 (–20°C)	3.7 (–20°C)	5.8 (–20°C)	5.8 (–20°C)	–	–	–	–
	Back Up Heating Capacity		kW	0	0	0	0	0	0	–	–	–	–
	Annual Electricity Consumption*2		kWh/a	839	1231	1513	1762	2627	2627	–	–	–	–
	SCOP*4, *5			4.0	4.3	4.1	3.9	4.2	4.2	–	–	–	–
	Energy Efficiency Class			A+	A+	A+	A	A+	A+	–	–	–	–
Operating Current (max)			A	14.1	14.4	20.6	21.0	29.2	10.7	29.3	12.3	30.8	15.8
Indoor Unit	Input [Cooling / Heating]	Rated	kW	0.09 (0.07) / 0.07	0.11 (0.09) / 0.09	0.12 (0.10) / 0.10	0.17 (0.15) / 0.15	0.25 (0.23) / 0.23	0.25 (0.23) / 0.23	0.36 (0.34) / 0.34	0.36 (0.34) / 0.34	0.39 (0.37) / 0.37	0.39 (0.37) / 0.37
	Operating Current (max)		A	1.07	1.39	1.62	1.97	2.65	2.65	2.76	2.76	2.78	2.78
	Dimensions <Panel>	H × W × D	mm	250-900-732		250-1100-732		250-1400-732				250-1600-732	
	Weight <Panel>		kg	26 (25)	27 (26)	30 (29)	30 (29)	39 (38)	39 (38)	40 (39)	40 (39)	44 (43)	44 (43)
	Air Volume [Lo-Mid-Hi]		m³/min	10.0-12.0-14.0	12.0-14.5-17.0	14.5-18.0-21.0	17.5-21.0-25.0	24.0-29.0-34.0	24.0-29.0-34.0	29.5-35.5-42.0	29.5-35.5-42.0	32.0-39.0-46.0	32.0-39.0-46.0
	External Static Pressure		Pa	35 / 50 / 70 / 100 / 150									
	Sound Level (SPL) [Lo-Mid-Hi]		dB(A)	23 - 27 - 30	26 - 31 - 35	25 - 29 - 33	26 - 30 - 34	29 - 34 - 38	29 - 34 - 38	33 - 36 - 40	33 - 36 - 40	34 - 38 - 43	34 - 38 - 43
	Sound Level (PWL)		dB(A)	54	59	55	58	62	62	66	66	67	67
Outdoor Unit	Dimensions	H × W × D	mm	630 - 809 - 300		943 - 950 - 330 (+30)		1338 - 1050 - 330 (+40)					
	Weight		kg	43	46	70	70	116	123	116	125	118	131
	Air Volume	Cooling	m³/min	45	45	55	55	110	110	120	120	120	120
		Heating	m³/min	45	45	55	55	110	110	120	120	120	120
	Sound Level (SPL)	Cooling	dB(A)	44	44	47	47	49	49	50	50	50	50
		Heating	dB(A)	46	46	48	48	51	51	52	52	52	52
	Sound Level (PWL)	Cooling	dB(A)	65	65	67	67	69	69	70	70	70	70
	Operating Current (max)		A	13.0	13.0	19.0	19.0	26.5	8.0	26.5	9.5	28.0	13.0
	Breaker Size		A	16	16	25	25	32	16	32	16	40	16
Ext. Piping	Diameter	Liquid / Gas	mm	6.35 / 12.7	6.35 / 12.7	9.52 / 15.88	9.52 / 15.88	9.52 / 15.88	9.52 / 15.88	9.52 / 15.88	9.52 / 15.88	9.52 / 15.88	9.52 / 15.88
	Max. Length	Out-In	m	50	50	50	50	75	75	75	75	75	75
	Max. Height	Out-In	m	30	30	30	30	30	30	30	30	30	30
Guaranteed Operating Range [Outdoor]		Cooling*3	°C	–15 ~ +46	–15 ~ +46	–15 ~ +46	–15 ~ +46	–15 ~ +46	–15 ~ +46	–15 ~ +46	–15 ~ +46	–15 ~ +46	–15 ~ +46
		Heating	°C	–11 ~ +21	–11 ~ +21	–20 ~ +21	–20 ~ +21	–20 ~ +21	–20 ~ +21	–20 ~ +21	–20 ~ +21	–20 ~ +21	–20 ~ +21

*1 Refrigerant leakage contributes to climate change. Refrigerant with lower global warming potential (GWP) would contribute less to global warming than a refrigerant with higher GWP, if leaked to the atmosphere. This appliance contains a refrigerant fluid with a GWP equal to 1975. This means that if 1 kg of this refrigerant fluid would be leaked to the atmosphere, the impact on global warming would be 1975 times higher than 1 kg of CO_2, over a period of 100 years. Never try to interfere with the refrigerant circuit yourself or disassemble the product yourself and always ask a professional. The GWP of R410A is 2088 in the IPCC 4th Assessment Report.
*2 Energy consumption based on standard test results. Actual energy consumption will depend on how the appliance is used and where it is located.
*3 Optional air protection guide is required where ambient temperature is lower than –5°C. *4 EER/COP and SEER/SCOP for M35-71 are measured at ESP 35Pa, for M100 at ESP 37Pa, for M125/140 at ESP 50Pa.
*5 SEER and SCOP are based on 2009/125/EC:Energy-related Products Directive and Regulation(EU) No206/2012.

PEAD-M SERIES
STANDARD INVERTER

Demand Control (PUHZ, Optional) | Long Life | Check! | AUTO | ACO | Auto Restart | Low Temp Cooling | Silent (PUHZ) | Rotation Back-up (PUHZ, Optional) | (PUHZ, Optional) | Group Control (PUHZ) | Group Control (SUZ, Optional) | M-NET connection (Optional) | Wi-Fi Interface (Optional) | COMPO (PUHZ)

Cleaning-free pipe reuse | Wiring Reuse (PUHZ, Optional) | Drain Lift Up (JAQ) | Pump Down (PUHZ) | Flare connection | Self Diagnosis | Failure Recall

Type				Inverter Heat Pump									
Indoor Unit				PEAD-M35JA(L)	PEAD-M50JA(L)	PEAD-M60JA(L)	PEAD-M71JA(L)	PEAD-M100JA(L)		PEAD-M125JA(L)		PEAD-M140JA(L)	
Outdoor Unit				SUZ-KA35VA6	SUZ-KA50VA6	SUZ-KA60VA6	SUZ-KA71VA6	PUHZ-P100VKA	PUHZ-P100YKA	PUHZ-P125VKA	PUHZ-P125YKA	PUHZ-P140VKA	PUHZ-P140YKA
Refrigerant				R410A*1									
Power Supply	Source			Outdoor power supply									
	Outdoor (V/Phase/Hz)			VA・VKA:230 / Single / 50, YKA:400 / Three / 50									
Cooling	Capacity	Rated	kW	3.6	4.9	5.7	7.1	9.4	9.4	12.1	12.1	13.6	13.6
		Min - Max	kW	1.4 - 3.9	2.3 - 5.6	2.3 - 6.3	2.8 - 8.1	3.7 - 10.6	3.7 - 10.6	5.6 - 13.0	5.6 - 13.0	5.8 - 14.1	5.8 - 14.1
	Total Input	Rated	kW	1.050 (1.030)	1.480 (1.460)	1.670 (1.650)	2.080 (2.060)	2.98 (2.96)	2.98 (2.96)	4.15 (4.14)	4.15 (4.14)	5.21 (5.19)	5.21 (5.19)
	EER*4			–	–	–	–	3.17	3.17	2.91 (2.92)	2.91 (2.92)	2.61 (2.62)	2.61 (2.62)
	EEL Rank			–	–	–	–	–	–	–	–	–	–
	Design Load		kW	3.6	4.9	5.7	7.1	9.4	9.4	–	–	–	–
	Annual Electricity Consumption*2		kWh/a	222 (210)	302 (290)	337 (325)	408 (396)	644 (627)	644 (627)	–	–	–	–
	SEER*4, *5			5.6 (6.0)	5.6 (5.9)	5.9 (6.1)	6.1 (6.2)	5.1 (5.2)	5.1 (5.2)	–	–	–	–
	Energy Efficiency Class			A+ (A+)	A+ (A+)	A+ (A++)	A++ (A++)	A (A)	A (A)	–	–	–	–
Heating (Average Season)	Capacity	Rated	kW	4.1	5.9	7.0	8.0	11.2	11.2	13.5	13.5	15.0	15.0
		Min - Max	kW	1.7 - 5.0	1.7 - 7.2	2.5 - 8.0	2.6 - 10.2	2.8 - 12.5	2.8 - 12.5	4.8 - 15.0	4.8 - 15.0	4.9 - 15.8	4.9 - 15.8
	Total Input	Rated	kW	1.110	1.620	1.930	2.040	2.94	2.94	3.73	3.73	4.27	4.27
	COP*4			–	–	–	–	3.80	3.80	3.61	3.61	3.51	3.51
	EEL Rank			–	–	–	–	–	–	–	–	–	–
	Design Load		kW	2.8	4.4	4.5	6.0	8.0	8.0	–	–	–	–
	Declared Capacity	at reference design temperature	kW	2.5 (–10°C)	3.9 (–10°C)	4.1 (–10°C)	5.3 (–10°C)	6.0 (–10°C)	6.0 (–10°C)	–	–	–	–
		at bivalent temperature	kW	2.5 (–7°C)	3.9 (–7°C)	4.1 (–7°C)	5.3 (–7°C)	7.0 (–7°C)	7.0 (–7°C)	–	–	–	–
		at operation limit temperature	kW	2.5 (–10°C)	3.9 (–10°C)	4.1 (–10°C)	5.3 (–10°C)	4.5 (–15°C)	4.5 (–15°C)	–	–	–	–
	Back Up Heating Capacity		kW	0.3	0.5	0.5	0.7	2.0	2.0	–	–	–	–
	Annual Electricity Consumption*2		kWh/a	980	1466	1569	2153	2793	2793	–	–	–	–
	SCOP*4, *5			4.0	4.2	4.0	3.9	4.0	4.0	–	–	–	–
	Energy Efficiency Class			A+	A+	A+	A	A+	A+	–	–	–	–
Operating Current (max)			A	9.3	13.4	15.6	18.1	22.7	14.2	29.3	14.3	32.8	14.3
Indoor Unit	Input [Cooling / Heating]	Rated	kW	0.09 (0.07) / 0.07	0.11 (0.09) / 0.09	0.12 (0.10) / 0.10	0.17 (0.15) / 0.15	0.25 (0.23) / 0.23	0.25 (0.23) / 0.23	0.36 (0.34) / 0.34	0.36 (0.34) / 0.34	0.39 (0.37) / 0.37	0.39 (0.37) / 0.37
	Operating Current (max)		A	1.07	1.39	1.62	1.97	2.65	2.65	2.76	2.76	2.78	2.78
	Dimensions <Panel>	H × W × D	mm	250-900-732		250-1100-732		250-1400-732				250-1600-732	
	Weight <Panel>		kg	26 (25)	27 (26)	30 (29)	30 (29)	39 (38)	39 (38)	40 (39)	40 (39)	44 (43)	44 (43)
	Air Volume [Lo-Mid-Hi]		m³/min	10.0 - 12.0 - 14.0	12.0-14.5-17.0	14.5-18.0-21.0	17.5-21.0-25.0	24.0-29.0-34.0	24.0-29.0-34.0	29.5-35.5-42.0	29.5-35.5-42.0	32.0-39.0-46.0	32.0-39.0-46.0
	External Static Pressure		Pa	35 / 50 / 70 / 100 / 150									
	Sound Level (SPL) [Lo-Mid-Hi]		dB(A)	23 - 27 - 30	26 - 31 - 35	25 - 29 - 33	26 - 30 - 34	29 - 34 - 38	29 - 34 - 38	33 - 36 - 40	33 - 36 - 40	34 - 38 - 43	34 - 38 - 43
	Sound Level (PWL)		dB(A)	54	59	55	58	62	62	66	66	67	67
Outdoor Unit	Dimensions	H × W × D	mm	550-800-285		880-840-330		981-1050-330					
	Weight		kg	35	54	50	53	76	78	84	85	84	85
	Air Volume	Cooling	m³/min	36.3	44.6	40.9	50.1	79	79	86	86	86	86
		Heating	m³/min	34.8	44.6	49.2	48.2	79	79	92	92	92	92
	Sound Level (SPL)	Cooling	dB(A)	49	52	55	55	51	51	54	54	56	56
		Heating	dB(A)	50	52	55	55	54	54	56	56	57	57
	Sound Level (PWL)	Cooling	dB(A)	62	65	65	69	70	70	72	72	75	75
	Operating Current (max)		A	8.2	12.0	14.0	16.1	20.0	11.5	26.5	11.5	30.0	11.5
	Breaker Size		A	10	20	20	20	32	16	32	16	40	16
Ext. Piping	Diameter	Liquid / Gas	mm	6.35 / 9.52	6.35 / 12.7	6.35 / 15.88	9.52 / 15.88	9.52 / 15.88	9.52 / 15.88	9.52 / 15.88	9.52 / 15.88	9.52 / 15.88	9.52 / 15.88
	Max. Length	Out-In	m	20	30	30	30	50	50	50	50	50	50
	Max. Height	Out-In	m	12	30	30	30	30	30	30	30	30	30
Guaranteed Operating Range [Outdoor]		Cooling*3	°C	–10 ~ +46	–15 ~ +46	–15 ~ +46	–15 ~ +46	–15 ~ +46	–15 ~ +46	–15 ~ +46	–15 ~ +46	–15 ~ +46	–15 ~ +46
		Heating	°C	–10 ~ +24	–10 ~ +24	–10 ~ +24	–10 ~ +24	–15 ~ +21	–15 ~ +21	–15 ~ +21	–15 ~ +21	–15 ~ +21	–15 ~ +21

*1 Refrigerant leakage contributes to climate change. Refrigerant with lower global warming potential (GWP) would contribute less to global warming than a refrigerant with higher GWP, if leaked to the atmosphere. This appliance contains a refrigerant fluid with a GWP equal to 1975. This means that if 1 kg of this refrigerant fluid would be leaked to the atmosphere, the impact on global warming would be 1975 times higher than 1 kg of CO_2, over a period of 100 years. Never try to interfere with the refrigerant circuit yourself or disassemble the product yourself and always ask a professional. The GWP of R410A is 2088 in the IPCC 4th Assessment Report.
*2 Energy consumption based on standard test results. Actual energy consumption will depend on how the appliance is used and where it is located.
*3 Optional air protection guide is required where ambient temperature is lower than –5°C. *4 EER/COP and SEER/SCOP for M35-71 are measured at ESP 35Pa, for M100 at ESP 37Pa, for M125/140 at ESP 50Pa.
*5 SEER and SCOP are based on 2009/125/EC:Energy-related Products Directive and Regulation(EU) No206/2012.

PEA SERIES

PEA-M200/250LA

The PEA Series is a large capacity ceiling-concealed type indoor units which are visually discreet blending into various environments. The new R32 refrigerant lineup realizes improved energy efficiency with a patented fan called a Turbo In Sirocco fan. A wider option of external static pressure up to 200Pa allows authentic ducted air-conditioning with an elegant interior layout.

Improved Energy Efficiency

Introduction of new R32 refrigerant with newly designed fan reduces energy consumption and have resulted in higher energy savings for all capacity ranges.

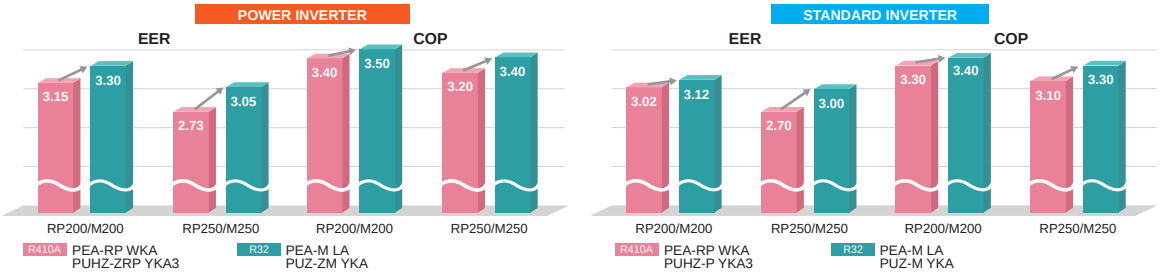

Low input with New Fan Design

The new PEA series applies a newly designed fan; a Turbo In Sirocco fan which realizes high efficiency with a lower power input. The new design is Mitsubishi Electric's patented technology with a combination of turbo fan inside the sirocco fan.

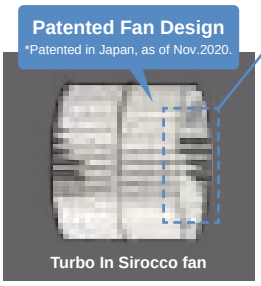

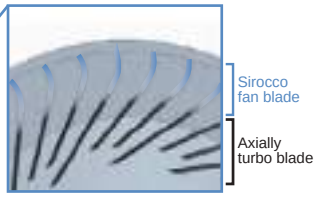

Inside the conventional sirocco fan blade, an axially turbo blade has been added.

Conventional Sirocco fan

Pressure loss occurs below the sirocco fan blade.

Turbo In Sirocco fan

Improved air distribution with less pressure loss leads to lower power input.

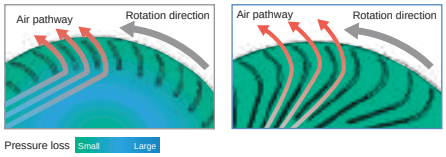

Wide range of external static pressure allows flexible duct design

200Pa setting is newly added enabling total of five static pressure level. The ability to select additional static pressure enables long duct and more freedom in design.

PEA-M200/250LA	<60>/75/<100>/<150>/<200> Pa

The factory setting of external static pressure is shown without brackets (< >).
Refer to "Fan characteristics curves" according to the external static pressure, in the DATA BOOK for the usable range of airflow rate.

PAR-40MAA Group Control

The PAR-40MAA remote controller can control up to 16 systems as a group, and is ideal for supporting the integrated management of building air conditioners.

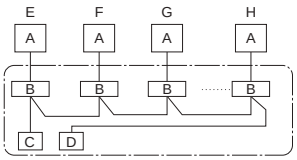

A Outdoor unit
B Indoor unit
C Main remote controller
D Subordinate remote controller
E Standard (Refrigerant address = 00)
F Refrigerant address = 01
G Refrigerant address = 02
H Refrigerant address = 15

LINE-UP

Indoor Unit

PEA-M200/250LA

Outdoor Unit

Power Inverter Series

R410A

PUHZ-ZRP200/250

Standard Inverter Series

R410A

PUHZ-P200/250

Power Inverter Series

PUZ-ZM200/250

Standard Inverter Series

PUZ-M200/250

Remote Controller

Optional

Optional

Optional

PEA-M SERIES
POWER INVERTER

Type				Inverter Heat Pump	
Indoor Unit				PEA-M200LA	PEA-M250LA
Outdoor Unit				PUZ-ZM200YKA	PUZ-ZM250YKA
Refrigerant				R32*1	
Power Supply	Source			Separate power supply	
	Outdoor (V/Phase/Hz)			400 / Three / 50	
Cooling	Capacity	Rated	kW	19.0	22.0
		Min - Max	kW	9.2 - 22.4	9.9 - 27.0
	Total Input	Rated	kW	5.757	7.213
	EER			3.30	3.05
		EEL Rank		-	-
Heating (Average Season)	Capacity	Rated	kW	22.4	27.0
		Min - Max	kW	7.1 - 25.0	7.3 - 31.0
	Total Input	Rated	kW	6.400	7.941
	COP			3.50	3.40
		EEL Rank		-	-
Operating Current (max)				25.7	25.9
Indoor Unit	Input [Cooling / Heating]	Rated	kW	0.35 / 0.35	0.53 / 0.53
	Operating Current (max)		A	3.1	3.4
	Dimensions	H x W x D	mm	470 - 1370 - 1120	
	Weight		kg	87	
	Air Volume [Lo-Mid-Hi]		m^3/min	42 - 51 - 60 (60Pa - 150Pa) 42 - 51 - 55 (200Pa)	50 - 61 - 72 (60Pa - 100Pa) 45 - 55 - 65 (150Pa) 45 - 50 - 55 (200Pa)
	External Static Pressure		Pa	(60) / 75 / (100) / (150) / (200)	
	Sound Level (SPL) [Lo-Mid-Hi]		dB(A)	35 - 40 - 43	38 - 43 - 47
	Sound Level (PWL)		dB(A)	63 - 64 - 64	67 - 67 - 68
Outdoor Unit	Dimensions	H x W x D	mm	1338 - 1050 - 330 (+40)	
	Weight		kg	137	138
	Air Volume	Cooling	m^3/min	140	140
		Heating	m^3/min	140	140
	Sound Level (SPL)	Cooling	dB(A)	59	59
		Heating	dB(A)	62	62
	Sound Level (PWL)	Cooling	dB(A)	77	77
	Operating Current (max)		A	22.5	22.5
	Breaker Size		A	32	32
Ext. Piping	Diameter	Liquid / Gas	mm	9.52 / 25.4	12.7 / 25.4
	Max. Length	Out-In	m	100	100
	Max. Height	Out-In	m	30	30
Guaranteed Operating Range [Outdoor]		Cooling*2	℃	-15 ~ +46	-15 ~ +46
		Heating	℃	-20 ~ +21	-20 ~ +21

*1 Refrigerant leakage contributes to climate change. Refrigerant with lower global warming potential (GWP) would contribute less to global warming than a refrigerant with higher GWP, if leaked to the atmosphere. This appliance contains a refrigerant fluid with a GWP equal to 1975. This means that if 1 kg of this refrigerant fluid would be leaked to the atmosphere, the impact on global warming would be 1975 times higher than 1 kg of CO_2, over a period of 100 years. Never try to interfere with the refrigerant circuit yourself or disassemble the product yourself and always ask a professional.
*2 Optional air protection guide is required where ambient temperature is lower than -5°C.

PEA-M SERIES
STANDARD INVERTER

Type				Inverter Heat Pump	
Indoor Unit				PEA-M200LA	PEA-M250LA
Outdoor Unit				PUZ-M200YKA	PUZ-M250YKA
Refrigerant				R32*1	
Power Supply	Source			Separate power supply	
	Outdoor (V/Phase/Hz)			400 / Three / 50	
Cooling	Capacity	Rated	kW	19.0	22.0
		Min - Max	kW	9.2 - 22.4	9.9 - 27.0
	Total Input	Rated	kW	6.089	7.333
	EER			3.12	3.00
		EEL Rank		-	-
Heating (Average Season)	Capacity	Rated	kW	22.4	27.0
		Min - Max	kW	6.8 - 25.0	7.3 - 31.0
	Total Input	Rated	kW	6.588	8.181
	COP			3.40	3.30
		EEL Rank		-	-
Operating Current (max)				25.7	25.9
Indoor Unit	Input [Cooling / Heating]	Rated	kW	0.35 / 0.35	0.53 / 0.53
	Operating Current (max)		A	3.1	3.4
	Dimensions	H x W x D	mm	470 - 1370 - 1120	
	Weight		kg	87	
	Air Volume [Lo-Mid-Hi]		m^3/min	42 - 51 - 60 (60Pa - 150Pa) 42 - 51 - 55 (200Pa)	50 - 61 - 72 (60Pa - 100Pa) 45 - 55 - 65 (150Pa) 45 - 50 - 55 (200Pa)
	External Static Pressure		Pa	(60) / 75 / (100) / (150) / (200)	
	Sound Level (SPL) [Lo-Mid-Hi]		dB(A)	35 - 40 - 43	38 - 43 - 47
	Sound Level (PWL)		dB(A)	63 - 64 - 64	67 - 67 - 68
Outdoor Unit	Dimensions	H x W x D	mm	1338 - 1050 - 330 (+40)	
	Weight		kg	129	138
	Air Volume	Cooling	m^3/min	140	140
		Heating	m^3/min	140	140
	Sound Level (SPL)	Cooling	dB(A)	58	59
		Heating	dB(A)	60	62
	Sound Level (PWL)	Cooling	dB(A)	78	77
	Operating Current (max)		A	22.5	22.5
	Breaker Size		A	32	32
Ext. Piping	Diameter	Liquid / Gas	mm	9.52 / 25.4	12.7 / 25.4
	Max. Length	Out-In	m	70	70
	Max. Height	Out-In	m	30	30
Guaranteed Operating Range [Outdoor]		Cooling*2	℃	-15 ~ +46	-15 ~ +46
		Heating	℃	-20 ~ +21	-20 ~ +21

*1 Refrigerant leakage contributes to climate change. Refrigerant with lower global warming potential (GWP) would contribute less to global warming than a refrigerant with higher GWP, if leaked to the atmosphere. This appliance contains a refrigerant fluid with a GWP equal to 1975. This means that if 1 kg of this refrigerant fluid would be leaked to the atmosphere, the impact on global warming would be 1975 times higher than 1 kg of CO_2, over a period of 100 years. Never try to interfere with the refrigerant circuit yourself or disassemble the product yourself and always ask a professional.
*2 Optional air protection guide is required where ambient temperature is lower than -5°C.

PEA-M SERIES
POWER INVERTER

DC Inverter (Vector Sine Wave) | DC Scroll | Rare Earth Magnet | DC Fan Motor | Vector-Wave | Power Receiver | Grooved Piping | Demand Control (Optional) | ACO | Auto Restart | Low Temp Cooling | Silent | Ampere Limit | Group Control (Optional) | M-NET connection (Optional) | Wi-Fi Interface (Optional) | Cleaning-free blue revolve | Pump Down | Flare connection | Self Diagnosis | Failure Recall

Type				Inverter Heat Pump	
Indoor Unit				PEA-M200LA	PEA-M250LA
Outdoor Unit				PUHZ-ZRP200YKA3	PUHZ-ZRP250YKA3
Refrigerant				R410A*1	
Power Supply	Source			Separate power supply	
	Outdoor (V/Phase/Hz)			400 / Three / 50	
Cooling	Capacity	Rated	kW	19.0	22.0
		Min - Max	kW	9.0 - 22.4	11.2 - 27.0
	Total Input	Rated	kW	5.937	7.971
	EER			3.20	2.76
		EEL Rank		-	-
Heating (Average Season)	Capacity	Rated	kW	22.4	27.0
		Min - Max	kW	9.5 -25.0	12.5 - 31.0
	Total Input	Rated	kW	6.530	8.181
	COP			3.43	3.30
		EEL Rank		-	-
Operating Current (max)				22.2	24.4
Indoor Unit	Input [Cooling / Heating]	Rated	kW	0.35 / 0.35	0.53 / 0.53
	Operating Current (max)		A	3.1	3.4
	Dimensions	H x W x D	mm	470 - 1370 - 1120	
	Weight		kg	87	
	Air Volume [Lo-Mid-Hi]		m^3/min	42 - 51 - 60 (60Pa - 150Pa) 42 - 51 - 55 (200Pa)	50 - 61 - 72 (60Pa - 100Pa) 45 - 55 - 65 (150Pa) 45 - 50 - 55 (200Pa)
	External Static Pressure		Pa	(60) / 75 / (100) / (150) / (200)	
	Sound Level (SPL) [Lo-Mid-Hi]		dB(A)	35 - 40 - 43	38 - 43 - 47
	Sound Level (PWL)		dB(A)	63 - 64 - 64	67 - 67 - 68
Outdoor Unit	Dimensions	H x W x D	mm	1338 - 1050 - 330 (+40)	
	Weight		kg	135	
	Air Volume	Cooling	m^3/min	140	
		Heating	m^3/min	140	
	Sound Level (SPL)	Cooling	dB(A)	59	
		Heating	dB(A)	62	
	Sound Level (PWL)	Cooling	dB(A)	77	
	Operating Current (max)		A	19.0	21.0
	Breaker Size		A	32	
Ext. Piping	Diameter	Liquid / Gas	mm	9.52 / 25.4	12.7 / 25.4
	Max. Length	Out-In	m	100	
	Max. Height	Out-In	m	30	
Guaranteed Operating Range [Outdoor]		Cooling*2	℃	-15 ~ +46	
		Heating	℃	-20 ~ +21	

*1 Refrigerant leakage contributes to climate change. Refrigerant with lower global warming potential (GWP) would contribute less to global warming than a refrigerant with higher GWP, if leaked to the atmosphere. This appliance contains a refrigerant fluid with a GWP equal to 1975. This means that if 1 kg of this refrigerant fluid would be leaked to the atmosphere, the impact on global warming would be 1975 times higher than 1 kg of CO_2, over a period of 100 years. Never try to interfere with the refrigerant circuit yourself or disassemble the product yourself and always ask a professional.
*2 Optional air protection guide is required where ambient temperature is lower than -5°C.

PEA-M SERIES
STANDARD INVERTER

DC Inverter (Vector Sine Wave) | DC Scroll | Rare Earth Magnet | DC Fan Motor | Vector-Wave | Grooved Piping | Demand Control (Optional) | ACO | Auto Restart | Low Temp Cooling | Silent | Group Control (Optional) | M-NET connection (Optional) | Wi-Fi Interface (Optional) | Cleaning-free blue revolve | Pump Down | Flare connection | Self Diagnosis | Failure Recall

Type				Inverter Heat Pump	
Indoor Unit				PEA-M200LA	PEA-M250LA
Outdoor Unit				PUHZ-P200YKA3	PUHZ-P250YKA3
Refrigerant				R410A*1	
Power Supply	Source			Separate power supply	
	Outdoor (V/Phase/Hz)			400 / Three / 50	
Cooling	Capacity	Rated	kW	19.0	22.0
		Min - Max	kW	9.0 - 22.4	11.2 - 27.0
	Total Input	Rated	kW	6.188	8.058
	EER			3.07	2.73
		EEL Rank		-	-
Heating (Average Season)	Capacity	Rated	kW	22.4	27.0
		Min - Max	kW	9.5 - 25.0	12.5 - 31.0
	Total Input	Rated	kW	6.706	8.437
	COP			3.34	3.20
		EEL Rank		-	-
Operating Current (max)				22.2	24.4
Indoor Unit	Input [Cooling / Heating]	Rated	kW	0.35 / 0.35	0.53 / 0.53
	Operating Current (max)		A	3.1	3.4
	Dimensions	H x W x D	mm	470 - 1370 - 1120	
	Weight		kg	87	
	Air Volume [Lo-Mid-Hi]		m^3/min	42 - 51 - 60 (60Pa - 150Pa) 42 - 51 - 55 (200Pa)	50 - 61 - 72 (60Pa - 100Pa) 45 - 55 - 65 (150Pa) 45 - 50 - 55 (200Pa)
	External Static Pressure		Pa	(60) / 75 / (100) / (150) / (200)	
	Sound Level (SPL) [Lo-Mid-Hi]		dB(A)	35 - 40 - 43	38 - 43 - 47
	Sound Level (PWL)		dB(A)	63 - 64 - 64	67 - 67 - 68
Outdoor Unit	Dimensions	H x W x D	mm	1338 - 1050 - 330 (+40)	
	Weight		kg	127	135
	Air Volume	Cooling	m^3/min	140	140
		Heating	m^3/min	140	140
	Sound Level (SPL)	Cooling	dB(A)	58	59
		Heating	dB(A)	60	62
	Sound Level (PWL)	Cooling	dB(A)	78	77
	Operating Current (max)		A	19.0	21.0
	Breaker Size		A	32	32
Ext. Piping	Diameter	Liquid / Gas	mm	9.52 / 25.4	12.7 / 25.4
	Max. Length	Out-In	m	70	70
	Max. Height	Out-In	m	30	30
Guaranteed Operating Range [Outdoor]		Cooling*2	℃	-15 ~ +46	-15 ~ +46
		Heating	℃	-20 ~ +21	-20 ~ +21

*1 Refrigerant leakage contributes to climate change. Refrigerant with lower global warming potential (GWP) would contribute less to global warming than a refrigerant with higher GWP, if leaked to the atmosphere. This appliance contains a refrigerant fluid with a GWP equal to 1975. This means that if 1 kg of this refrigerant fluid would be leaked to the atmosphere, the impact on global warming would be 1975 times higher than 1 kg of CO_2, over a period of 100 years. Never try to interfere with the refrigerant circuit yourself or disassemble the product yourself and always ask a professional.
*2 Optional air protection guide is required where ambient temperature is lower than -5°C.

PKA SERIES

R410A

PKA-M35/50LA(L)

R410A

PKA-M60/71/100KA(L)

The compact, wall-mounted indoor units offer the convenience of simple installation, and a large product line-up (M35-M100 models) ensures a best-match solution. Designed for highly efficient energy savings, the PKA Series is the answer to your air conditioning needs.

New Design (M35-50)

A sharp and simple form that combines beauty and function. The simple square design harmonizes beautifully with the straight lines created by the intersection of the walls, floor and ceiling of the space, leading to a better quality of space. Also adopted a new white body color. It will make your life and space beautiful and comfortable without disturbing the atmosphere of the room. In addition, we realized miniaturization of conventional model. It contributes to space saving of installation area and giving room to room space.

Quietness (M35-50)

The noise level has been significantly reduced compared to the conventional model by reviewing the unit structure and improving the line flow fan.

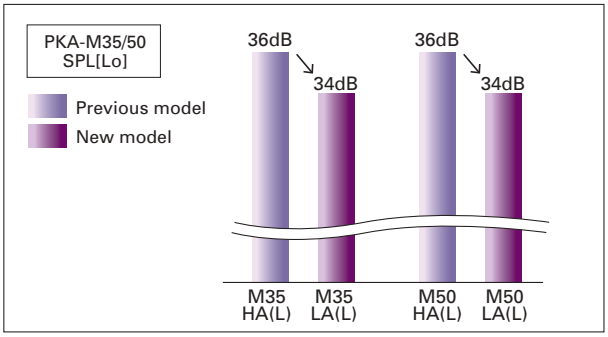

ErP Lot 10 Compliant with High Energy-efficiency Achieving SEER/SCOP Rank A, A+ and A++

Highly efficient indoor unit heat exchangers and and newly designed power inverters (PUHZ-ZM) contribute to an amazing reduction in electricity consumption throughout a year, and have resulted in models in the full-capacity range attaining the rank A, A+ and A++ energy savings rating.

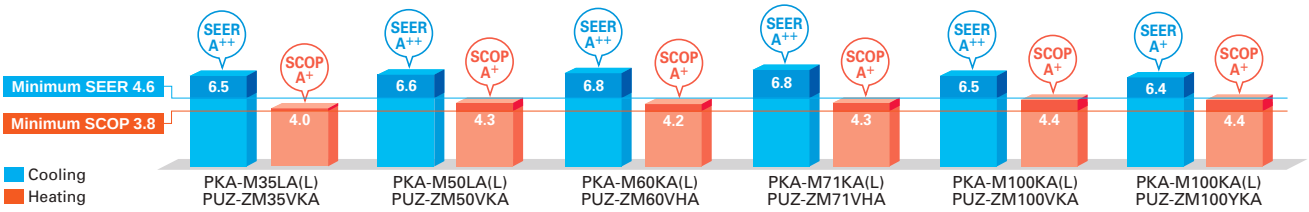

Airflow Control – Horizontal Airflow – (M35-50)

Significantly improved airflow control to achieve horizontal airflow. This reduces the feeling of draft even on a wall-mounted model, and air conditioning the indoor space firmly.

Airflow distributions

PKA-M50LA <Cooling mode> Horizontal airflow

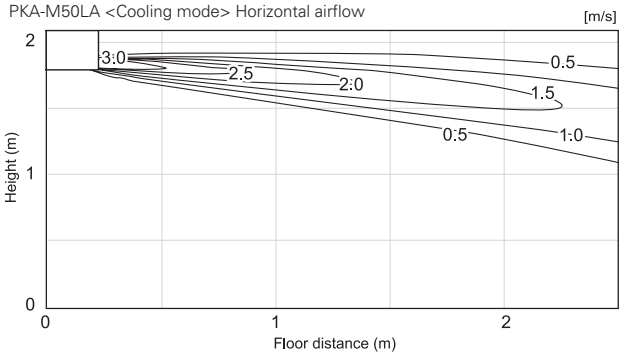

SERIES SELECTION

Power Inverter Series

DC Inverter | 100-250 Vector Sine Wave | 100-140 DC Rotary | 200/250 DC Scroll | DC Fan Motor | 100-250 Vector-Wave | 100-140 PAM | Grooved Piping

Indoor Unit

R410A

PKA-M35/50LA(L)

R410A

PKA-M60/71/100KA(L)

Outdoor Unit

For Single

PUZ-ZM35/50

PUZ-ZM60/71

PUZ-ZM100/125/140

For Multi
(Twin/Triple/Quadruple)

PUZ-ZM71

PUZ-ZM100/125/140/200/250

Remote Controller

Optional (✻)

Optional

Optional (✻)

*PKA-M35/50LAL only

*PKA-M60/71/100KAL only

(✻) PAC-SH29TC-E is required for LAL and KAL (optional)

PKA-M LA(L)/KA(L) Indoor Unit Combinations

Indoor unit combinations shown below are possible.

Indoor Unit Combination	Outdoor Unit Capacity																			
	For Single									For Twin						For Triple			For Quadruple	
	35	50	60	71	100	125	140	200	250	71	100	125	140	200	250	140	200	250	200	250
Power Inverter (PUHZ-ZRP)	35x1	50x1	60x1	71x1	100x1	–	–	–	–	35x2	50x2	60x2	71x2	100x2	–	50x3	60x3	71x3	50x4	60x4
Distribution Pipe	–	–	–	–	–	–	–	–	–	MSDD-50TR2-E				MSDD-50WR2-E	–	MSDT-111R3-E			MSDF-1111R2-E	

SERIES SELECTION

Standard Inverter Series

DC Inverter | 100-250 Vector Sine Wave | 100-140 DC Rotary | 200/250 DC Scroll | DC Fan Motor | 100-250 Vector-Wave | 100-140 PAM | Grooved Piping

Indoor Unit

R410A

PKA-M35/50LA(L)

PKA-M60/71/100KA(L)

Outdoor Unit

For Single

PUZ-M100

For Multi
(Twin/Triple/Quadruple)

PUZ-M100/125/140

PUZ-M200/250

Remote Controller

Optional (✻)

Optional

Optional (✻)

*PKA-M35/50LAL only

*PKA-M60/71/100KAL only

(✻) PAC-SH29TC-E is required for LAL and KAL (optional)

PKA-M LA/KA Indoor Unit Combinations

Indoor unit combinations shown below are possible.

Indoor Unit Combination	Outdoor Unit Capacity																			
	For Single									For Twin						For Triple			For Quadruple	
	35	50	60	71	100	125	140	200	250	71	100	125	140	200	250	140	200	250	200	250
Standard Inverter (PUHZ-P)	–	–	–	–	100x1	–	–	–	–	–	50x2	60x2	71x2	100x2	–	50x3	60x3	71x3	50x4	60x4
Distribution Pipe	–	–	–	–	–	–	–	–	–	–	MSDD-50TR2-E			MSDD-50WR2-E	–	MSDT-111R3-E			MSDF-1111R2-E	

PKA-M SERIES
POWER INVERTER

Demand Control (Optional) | Pure White | AUTO VANE | Check! (Optional) | SWING | AUTO | ACO | Auto Restart | Low Temp Cooling | Silent | Ampere Limit (60-140V/200/250) | Rotation Back-up (Optional) | (Optional) | Group Control (Optional) | M-NET connection (Optional)

Wi-Fi Interface (Optional) | COMPO | Cleaning-free pipe route | Wiring Reuse (Optional) | Drain Lift Up (Optional) | Pump Down | Flare connection | Self Diagnosis | Failure Recall

Type				Inverter Heat Pump					
Indoor Unit				PKA-M35LA(L)	PKA-M50LA(L)	PKA-M60KA(L)	PKA-M71KA(L)	PKA-M100KA(L)	
Outdoor Unit				PUZ-ZM35VKA	PUZ-ZM50VKA	PUZ-ZM60VHA	PUZ-ZM71VHA	PUZ-ZM100VKA	PUZ-ZM100YKA
Refrigerant				R32*1					
Power Supply	Source			Outdoor power supply					
	Outdoor (V/Phase/Hz)			VKA • VHA:230 / Single / 50, YKA:400 / Three / 50					
Cooling	Capacity	Rated	kW	3.6	4.6	6.1	7.1	9.5	9.5
		Min - Max	kW	1.6 - 4.5	2.3 - 5.6	2.7 - 6.7	3.3 - 8.1	4.9 - 11.4	4.9 - 11.4
	Total Input	Rated	kW	0.850	1.230	1.560	1.863	2.405	2.405
	EER			4.20	3.71	3.91	3.81	3.95	3.95
		EEL Rank		–	–	–	–	–	–
	Design Load		kW	3.6	4.6	6.1	7.1	9.5	9.5
	Annual Electricity Consumption*2		kWh/a	194	244	313	364	508	519
	SEER*4			6.5	6.6	6.8	6.8	6.5	6.4
		Energy Efficiency Class		A++	A++	A++	A++	A++	A++
Heating (Average Season)	Capacity	Rated	kW	4.1	5.0	7.0	8.0	11.2	11.2
		Min - Max	kW	1.6 - 5.2	2.5 - 6.6	2.8 - 8.2	3.5 - 10.2	4.5 - 14.0	4.5 - 14.0
	Total Input	Rated	kW	1.040	1.340	1.732	2.116	3.102	3.102
	COP			3.94	3.72	4.04	3.78	3.61	3.61
		EEL Rank		–	–	–	–	–	–
	Design Load		kW	2.4	3.3	4.4	4.7	7.8	7.8
	Declared Capacity	at reference design temperature	kW	2.4 (–10°C)	3.3 (–10°C)	4.4 (–10°C)	4.7 (–10°C)	7.8 (–10°C)	7.8 (–10°C)
		at bivalent temperature	kW	2.4 (–10°C)	3.3 (–10°C)	4.4 (–10°C)	4.7 (–10°C)	7.8 (–10°C)	7.8 (–10°C)
		at operation limit temperature	kW	2.2 (–11°C)	3.2 (–11°C)	2.8 (–20°C)	3.5 (–20°C)	5.8 (–20°C)	5.8 (–20°C)
	Back Up Heating Capacity		kW	0	0	0	0	0	0
	Annual Electricity Consumption*2		kWh/a	829	1074	1460	1523	2472	2472
	SCOP*4			4.0	4.3	4.2	4.3	4.4	4.4
		Energy Efficiency Class		A+	A+	A+	A+	A+	A+
Operating Current (max)			A	13.4	13.4	19.4	19.4	27.1	8.6
Indoor Unit	Input	Rated	kW	0.04 / 0.03	0.04 / 0.03	0.06 / 0.05	0.06 / 0.05	0.08 / 0.07	0.08 / 0.07
	Operating Current (max)		A	0.35	0.35	0.43	0.43	0.57	0.57
	Dimensions <Panel>	H × W × D	mm	299 - 898 - 237		365 - 1170 - 295			
	Weight <Panel>		kg	12.6	12.6	21	21	21	21
	Air Volume [Lo-Mi2-Mi1-Hi]		m³/min	7.5 - 8.2 - 9.2 - 10.9	7.5 - 8.2 - 9.2- 10.9	18 - 20 - 22	18 - 20 - 22	20 - 23 - 26	20 - 23 - 26
	Sound Level (SPL) [Lo-Mi2-Mi1-Hi]		dB(A)	34 - 37 - 40 - 43	34 - 37 - 40 - 43	39 - 42 - 45	39 - 42 - 45	41 - 45 - 49	41 - 45 - 49
	Sound Level (PWL)		dB(A)	60	60	64	64	65	65
Outdoor Unit	Dimensions	H × W × D	mm	630 - 809 - 300		943 - 950 - 330 (+25)		1338 - 1050 - 330 (+40)	
	Weight		kg	46	46	70	70	116	123
	Air Volume	Cooling	m³/min	45	45	55	55	110	110
		Heating	m³/min	45	45	55	55	110	110
	Sound Level (SPL)	Cooling	dB(A)	44	44	47	47	49	49
		Heating	dB(A)	46	46	49	49	51	51
	Sound Level (PWL)	Cooling	dB(A)	65	65	67	67	69	69
	Operating Current (max)		A	13.0	13.0	19.0	19.0	26.5	8.0
	Breaker Size		A	16	16	25	25	32	16
Ext. Piping	Diameter	Liquid / Gas	mm	6.35 / 12.7	6.35 / 12.7	9.52 / 15.88	9.52 / 15.88	9.52 / 15.88	9.52 / 15.88
	Max. Length	Out-In	m	50	50	55	55	100	100
	Max. Height	Out-In	m	30	30	30	30	30	30
Guaranteed Operating Range [Outdoor]		Cooling*3	°C	–15 ~ +46	–15 ~ +46	–15 ~ +46	–15 ~ +46	–15 ~ +46	–15 ~ +46
		Heating	°C	–11 ~ +21	–11 ~ +21	–20 ~ +21	–20 ~ +21	–20 ~ +21	–20 ~ +21

*1 Refrigerant leakage contributes to climate change. Refrigerant with lower global warming potential (GWP) would contribute less to global warming than a refrigerant with higher GWP, if leaked to the atmosphere. This appliance contains a refrigerant fluid with a GWP equal to 550. This means that if 1 kg of this refrigerant fluid would be leaked to the atmosphere, the impact on global warming would be 550 times higher than 1 kg of CO_2, over a period of 100 years. Never try to interfere with the refrigerant circuit yourself or disassemble the product yourself and always ask a professional. The GWP of R32 is 675 in the IPCC 4th Assessment Report.
*2 Energy consumption based on standard test results. Actual energy consumption will depend on how the appliance is used and where it is located.
*3 Optional air protection guide is required where ambient temperature is lower than –5°C.
*4 SEER and SCOP are based on 2009/125/EC:Energy-related Products Directive and Regulation(EU) No206/2012.

PKA-M SERIES
STANDARD INVERTER

Demand Control (Optional) | Pure White | AUTO VANE | Check! (Optional) | SWING | AUTO | ACO | Auto Restart | Low Temp Cooling | Silent | Ampere Limit (60-140V/200/250) | Rotation Back-up (Optional) | (Optional) | Group Control (Optional) | M-NET connection (Optional)

Wi-Fi Interface (Optional) | COMPO | Cleaning-free pipe route | Wiring Reuse (Optional) | Drain Lift Up (Optional) | Pump Down | Flare connection | Self Diagnosis | Failure Recall

Type				Inverter Heat Pump	
Indoor Unit				PKA-M100KA(L)	
Outdoor Unit				PUZ-M100VKA	PUZ-M100YKA
Refrigerant				R32*1	
Power Supply	Source			Outdoor power supply	
	Outdoor (V/Phase/Hz)			230 / Single / 50	400 / Three /50
Cooling	Capacity	Rated	kW	9.5	9.5
		Min - Max	kW	4.0 - 10.6	4.0 - 10.6
	Total Input	Rated	kW	2.94	2.94
	EER			3.23	3.23
		EEL Rank		–	–
	Design Load		kW	9.5	9.5
	Annual Electricity Consumption*2		kWh/a	572	572
	SEER*4			5.8	5.8
		Energy Efficiency Class		A+	A+
Heating (Average Season)	Capacity	Rated	kW	11.2	11.2
		Min - Max	kW	2.8 - 12.5	2.8 - 12.5
	Total Input	Rated	kW	3.28	3.28
	COP			3.41	3.41
		EEL Rank		–	–
	Design Load		kW	8.0	8.0
	Declared Capacity	at reference design temperature	kW	6.0 (–10°C)	6.0 (–10°C)
		at bivalent temperature	kW	7.0 (–7°C)	7.0 (–7°C)
		at operation limit temperature	kW	4.5 (–15°C)	4.5 (–15°C)
	Back Up Heating Capacity		kW	2.0	2.0
	Annual Electricity Consumption*2		kWh/a	2797	2797
	SCOP*4			4.0	4.0
		Energy Efficiency Class		A+	A+
Operating Current (max)			A	20.6	12.1
Indoor Unit	Input	Rated	kW	0.08	0.08
	Operating Current (max)		A	0.57	0.57
	Dimensions <Panel>	H × W × D	mm	365 - 1170 - 295	365 - 1170 - 295
	Weight <Panel>		kg	21	21
	Air Volume [Lo-Mid-Hi]		m³/min	20 - 23 - 26	20 - 23 - 26
	Sound Level (SPL) [Lo-Mid-Hi]		dB(A)	41 - 45 - 49	41 - 45 - 49
	Sound Level (PWL)		dB(A)	65	65
Outdoor Unit	Dimensions	H × W × D	mm	981 - 1050 - 330 (+40)	981 - 1050 - 330 (+40)
	Weight		kg	76	78
	Air Volume	Cooling	m³/min	79.0	79.0
		Heating	m³/min	79.0	79.0
	Sound Level (SPL)	Cooling	dB(A)	51	51
		Heating	dB(A)	54	54
	Sound Level (PWL)	Cooling	dB(A)	70	70
	Operating Current (max)		A	20.0	11.5
	Breaker Size		A	32	16
Ext. Piping	Diameter	Liquid / Gas	mm	9.52 / 15.88	9.52 / 15.88
	Max. Length	Out-In	m	55	55
	Max. Height	Out-In	m	30	30
Guaranteed Operating Range [Outdoor]		Cooling*3	°C	–15 ~ +46	–15 ~ +46
		Heating	°C	–15 ~ +21	–15 ~ +21

*1 Refrigerant leakage contributes to climate change. Refrigerant with lower global warming potential (GWP) would contribute less to global warming than a refrigerant with higher GWP, if leaked to the atmosphere. This appliance contains a refrigerant fluid with a GWP equal to 550. This means that if 1 kg of this refrigerant fluid would be leaked to the atmosphere, the impact on global warming would be 550 times higher than 1 kg of CO_2, over a period of 100 years. Never try to interfere with the refrigerant circuit yourself or disassemble the product yourself and always ask a professional. The GWP of R32 is 675 in the IPCC 4th Assessment Report.
*2 Energy consumption based on standard test results. Actual energy consumption will depend on how the appliance is used and where it is located.
*3 Optional air protection guide is required where ambient temperature is lower than –5°C.
*4 SEER and SCOP are based on 2009/125/EC:Energy-related Products Directive and Regulation(EU) No206/2012.

SERIES SELECTION

Power Inverter Series

Indoor Unit

R410A

PKA-M35/50LA(L)

PKA-M60/71/100KA(L)

Outdoor Unit

R410A

For Single

PUHZ-ZRP35/50

PUHZ-ZRP60/71

PUHZ-ZRP100

R410A

For Multi
(Twin/Triple/Quadruple)

PUHZ-ZRP71

PUHZ-ZRP100/125/140/200/250

Remote Controller

Optional (✻)

Optional

Optional (✻)

*PKA-M60/71/100KAL only

*PKA-M35/50LAL only

(✻) PAC-SH29TC-E is required for LAL and KAL (optional)

Standard Inverter Series

Indoor Unit

R410A

PKA-M35/50LA(L)

PKA-M60/71/100KA(L)

Outdoor Unit

R410A

For Single

PUHZ-P100

R410A

For Multi
(Twin/Triple/Quadruple)

PUHZ-P100/125/140

PUHZ-P200/250

Remote Controller

Optional (✻)

Optional

Optional (✻)

*PKA-M60/71/100KAL only

*PKA-M35/50LAL only

(✻) PAC-SH29TC-E is required for LAL and KAL (optional)

PKA-M LA/KA Indoor Unit Combinations

Indoor unit combinations shown below are possible.

Indoor Unit Combination		Outdoor Unit Capacity																			
		For Single									For Twin						For Triple			For Quadruple	
		35	50	60	71	100	125	140	200	250	71	100	125	140	200	250	140	200	250	200	250
Power Inverter (PUHZ-ZRP)		35x1	50x1	60x1	71x1	100x1	–	–	–	–	35x2	50x2	60x2	71x2	100x2	–	50x3	60x3	71x3	50x4	60x4
	Distribution Pipe	–	–	–	–	–	–	–	–	–	MSDD-50TR-E				MSDD-50WR-E	–	MSDT-111R-E			MSDF-1111R-E	
Standard Inverter (PUHZ-P)		–	–	–	–	100x1	–	–	–	–	–	50x2	60x2	71x2	100x2	–	50x3	60x3	71x3	50x4	60x4
	Distribution Pipe	–	–	–	–	–	–	–	–	–	–	MSDD-50TR-E			MSDD-50WR-E	–	MSDT-111R-E			MSDF-1111R-E	

PKA-M SERIES
POWER INVERTER

Demand Control (Optional) | Pure White | AUTO VANE | Check! (Optional) | SWING | AUTO | ACO | Auto Restart | Low Temp Cooling | Silent | Ampere Limit (60-140V/200/250) | Rotation Back-up (Optional) | (Optional) | Group Control (Optional) | M-NET connection (Optional) | Wi-Fi Interface (Optional) | COMPO | Cleaning-free pipe reuse | Wiring Reuse (Optional) | Drain Lift Up (Optional) | Pump Down | Flare connection | Self Diagnosis | Failure Recall

Type				Inverter Heat Pump					
Indoor Unit				PKA-M35LA(L)	PKA-M50LA(L)	PKA-M60KA(L)	PKA-M71KA(L)	PKA-M100KA(L)	
Outdoor Unit				PUHZ-ZRP35VKA2	PUHZ-ZRP50VKA2	PUHZ-ZRP60VHA2	PUHZ-ZRP71VHA2	PUHZ-ZRP100VKA3	PUHZ-ZRP100YKA3
Refrigerant				R410A*1					
Power Supply	Source			Outdoor power supply					
	Outdoor (V/Phase/Hz)			VKA • VHA:230 / Single / 50, YKA:400 / Three / 50					
Cooling	Capacity	Rated	kW	3.6	4.6	6.1	7.1	9.5	9.5
		Min - Max	kW	1.6 - 4.5	2.3 - 5.4	2.7 - 6.7	3.3 - 8.1	4.9 - 11.4	4.9 - 11.4
	Total Input	Rated	kW	0.940	1.424	1.60	1.80	2.40	2.40
	EER			3.80	3.23	3.81	3.94	3.96	3.96
		EEL Rank		–	–	–	–	–	–
	Design Load		kW	3.6	4.6	6.1	7.1	9.5	9.5
	Annual Electricity Consumption*2		kWh/a	206	263	324	368	522	533
	SEER*4			6.1	6.1	6.5	6.7	6.3	6.2
		Energy Efficiency Class		A++	A++	A++	A++	A++	A++
Heating (Average Season)	Capacity	Rated	kW	4.1	5.0	7.0	8.0	11.2	11.2
		Min - Max	kW	1.6 - 5.2	2.5 - 7.3	2.8 - 8.2	3.5 - 10.2	4.5 - 14.0	4.5 - 14.0
	Total Input	Rated	kW	1.070	1.501	1.96	2.19	3.04	3.04
	COP			3.83	3.33	3.57	3.65	3.68	3.68
		EEL Rank		–	–	–	–	–	–
	Design Load		kW	2.4	3.3	4.4	4.7	7.8	7.8
	Declared Capacity	at reference design temperature	kW	2.4 (–10°C)	3.3 (–10°C)	4.4 (–10°C)	4.7 (–10°C)	7.8 (–10°C)	7.8 (–10°C)
		at bivalent temperature	kW	2.4 (–10°C)	3.3 (–10°C)	4.4 (–10°C)	4.7 (–10°C)	7.8 (–10°C)	7.8 (–10°C)
		at operation limit temperature	kW	2.2 (–11°C)	3.2 (–11°C)	2.8 (–20°C)	3.5 (–20°C)	5.8 (–20°C)	5.8 (–20°C)
	Back Up Heating Capacity		kW	0	0	0	0	0	0
	Annual Electricity Consumption*2		kWh/a	841	1126	1473	1532	2608	2608
	SCOP*4			3.9	4.1	4.2	4.3	4.1	4.1
		Energy Efficiency Class		A	A+	A+	A+	A+	A+
Operating Current (max)			A	13.4	13.4	19.4	19.4	27.1	8.6
Indoor Unit	Input [Cooling / Heating]	Rated	kW	0.04 / 0.03	0.04 / 0.03	0.06	0.06	0.08	0.08
	Operating Current (max)		A	0.35	0.35	0.43	0.43	0.57	0.57
	Dimensions <Panel>	H × W × D	mm	299 - 898 - 237		365 - 1170 - 295			
	Weight <Panel>		kg	12.6	12.6	21	21	21	21
	Air Volume [Lo-Mi2-Mi1-Hi]		m³/min	7.5 - 8.2 - 9.2 - 10.9	7.5 - 8.2 - 9.2 - 10.9	18 - 20 - 22	18 - 20 - 22	20 - 23 - 26	20 - 23 - 26
	Sound Level (SPL) [Lo-Mi2-Mi1-Hi]		dB(A)	34 - 37 - 40 - 43	34 - 37 - 40 - 43	39 - 42 - 45	39 - 42 - 45	41 - 45 - 49	41 - 45 - 49
	Sound Level (PWL)		dB(A)	60	60	64	64	65	65
Outdoor Unit	Dimensions	H × W × D	mm	630 - 809 - 300		943 - 950 - 330 (+30)		1338 - 1050 - 330 (+40)	
	Weight		kg	43	46	70	70	116	123
	Air Volume	Cooling	m³/min	45	45	55	55	110	110
		Heating	m³/min	45	45	55	55	110	110
	Sound Level (SPL)	Cooling	dB(A)	44	44	47	47	49	49
		Heating	dB(A)	46	46	48	48	51	51
	Sound Level (PWL)	Cooling	dB(A)	65	65	67	67	69	69
	Operating Current (max)		A	13.0	13.0	19.0	19.0	26.5	8.0
	Breaker Size		A	16	16	25	25	32	16
Ext. Piping	Diameter	Liquid / Gas	mm	6.35 / 12.7	6.35 / 12.7	9.52 / 15.88	9.52 / 15.88	9.52 / 15.88	9.52 / 15.88
	Max. Length	Out-In	m	50	50	50	50	75	75
	Max. Height	Out-In	m	30	30	30	30	30	30
Guaranteed Operating Range [Outdoor]		Cooling*3	°C	–15 ~ +46	–15 ~ +46	–15 ~ +46	–15 ~ +46	–15 ~ +46	–15 ~ +46
		Heating	°C	–11 ~ +21	–11 ~ +21	–20 ~ +21	–20 ~ +21	–20 ~ +21	–20 ~ +21

*1 Refrigerant leakage contributes to climate change. Refrigerant with lower global warming potential (GWP) would contribute less to global warming than a refrigerant with higher GWP, if leaked to the atmosphere. This appliance contains a refrigerant fluid with a GWP equal to 1975. This means that if 1 kg of this refrigerant fluid would be leaked to the atmosphere, the impact on global warming would be 1975 times higher than 1 kg of CO_2, over a period of 100 years. Never try to interfere with the refrigerant circuit yourself or disassemble the product yourself and always ask a professional.
The GWP of R410A is 2088 in the IPCC 4th Assessment Report.
*2 Energy consumption based on standard test results. Actual energy consumption will depend on how the appliance is used and where it is located.
*3 Optional air protection guide is required where ambient temperature is lower than –5°C.
*4 SEER and SCOP are based on 2009/125/EC:Energy-related Products Directive and Regulation(EU) No206/2012.

PKA-M SERIES
STANDARD INVERTER

Demand Control (Optional) | Pure White | AUTO VANE | Check! (Optional) | SWING | AUTO | ACO | Auto Restart | Low Temp Cooling | Silent | Rotation Back-up (Optional) | (Optional) | Group Control (Optional) | M-NET connection (Optional) | Wi-Fi Interface (Optional) | COMPO | Cleaning-free pipe reuse | Wiring Reuse (Optional) | Drain Lift Up (Optional) | Pump Down | Flare connection | Self Diagnosis | Failure Recall

Type				Inverter Heat Pump	
Indoor Unit				PKA-M100KA(L)	
Outdoor Unit				PUHZ-P100VKA	PUHZ-P100YKA
Refrigerant				R410A*1	
Power Supply	Source			Outdoor power supply	
	Outdoor (V/Phase/Hz)			230 / Single / 50	400 / Three / 50
Cooling	Capacity	Rated	kW	9.4	9.4
		Min - Max	kW	3.7 - 10.6	3.7 - 10.6
	Total Input	Rated	kW	3.12	3.12
	EER			3.01	3.01
		EEL Rank		–	–
	Design Load		kW	9.4	9.4
	Annual Electricity Consumption*2		kWh/a	586	586
	SEER*4			5.6	5.6
		Energy Efficiency Class		A+	A+
Heating (Average Season)	Capacity	Rated	kW	11.2	11.2
		Min - Max	kW	2.8 - 12.5	2.8 - 12.5
	Total Input	Rated	kW	3.48	3.48
	COP			3.21	3.21
		EEL Rank		–	–
	Design Load		kW	8.0	8.0
	Declared Capacity	at reference design temperature	kW	6.0 (–10°C)	6.0 (–10°C)
		at bivalent temperature	kW	7.0 (–7°C)	7.0 (–7°C)
		at operation limit temperature	kW	4.5 (–15°C)	4.5 (–15°C)
	Back Up Heating Capacity		kW	2.0	2.0
	Annual Electricity Consumption*2		kWh/a	2795	2795
	SCOP*4			4.0	4.0
		Energy Efficiency Class		A+	A+
Operating Current (max)			A	20.6	12.1
Indoor Unit	Input	Rated	kW	0.08	0.08
	Operating Current (max)		A	0.57	0.57
	Dimensions <Panel>	H × W × D	mm	365 - 1170 - 295	
	Weight <Panel>		kg	21	21
	Air Volume [Lo-Mid-Hi]		m³/min	20 - 23 - 26	20 - 23 - 26
	Sound Level (SPL) [Lo-Mid-Hi]		dB(A)	41 - 45 - 49	41 - 45 - 49
	Sound Level (PWL)		dB(A)	65	65
Outdoor Unit	Dimensions	H × W × D	mm	981 - 1050 - 330	
	Weight		kg	76	78
	Air Volume	Cooling	m³/min	79	79
		Heating	m³/min	79	79
	Sound Level (SPL)	Cooling	dB(A)	51	51
		Heating	dB(A)	54	54
	Sound Level (PWL)	Cooling	dB(A)	70	70
	Operating Current (max)		A	20.0	11.5
	Breaker Size		A	32	16
Ext. Piping	Diameter	Liquid / Gas	mm	9.52 / 15.88	9.52 / 15.88
	Max. Length	Out-In	m	50	50
	Max. Height	Out-In	m	30	30
Guaranteed Operating Range [Outdoor]		Cooling*3	°C	–15 ~ +46	–15 ~ +46
		Heating	°C	–15 ~ +21	–15 ~ +21

*1 Refrigerant leakage contributes to climate change. Refrigerant with lower global warming potential (GWP) would contribute less to global warming than a refrigerant with higher GWP, if leaked to the atmosphere. This appliance contains a refrigerant fluid with a GWP equal to 1975. This means that if 1 kg of this refrigerant fluid would be leaked to the atmosphere, the impact on global warming would be 1975 times higher than 1 kg of CO_2, over a period of 100 years. Never try to interfere with the refrigerant circuit yourself or disassemble the product yourself and always ask a professional.
The GWP of R410A is 2088 in the IPCC 4th Assessment Report.
*2 Energy consumption based on standard test results. Actual energy consumption will depend on how the appliance is used and where it is located.
*3 Optional air protection guide is required where ambient temperature is lower than –5°C.
*4 SEER and SCOP are based on 2009/125/EC:Energy-related Products Directive and Regulation(EU) No206/2012.

PCA–KA SERIES

R410A

PCA-M35/50/60/71/100/125/140KA

A stylish new indoor unit design and airflow settings for both high- and low-ceiling interiors expand installation possibilities. Together with exceptional energy-saving performance, these units are the solution to diversified air conditioning needs.

Stylish Indoor Unit Design

A stylish square-like design is adopted for the indoor units of all models. As a result, the units blend in better with the ceiling.

PCA-KA

ErP Lot 10 Compliant with High Energy-efficiency Achieving SEER/SCOP Rank A, A+ and A++

A direct-current (DC) fan motor is isntalled in the indoor unit, increasing the seasonal energy efficiency of newly designed Power Inverter series (PUHZ-ZM) and resulting in the full capacity models comply ErP Lot 10 with energy ranking A+/A++ for cooling and A/A+ for heating. This contribute to an impressive reduction in the cost of annual electricity.

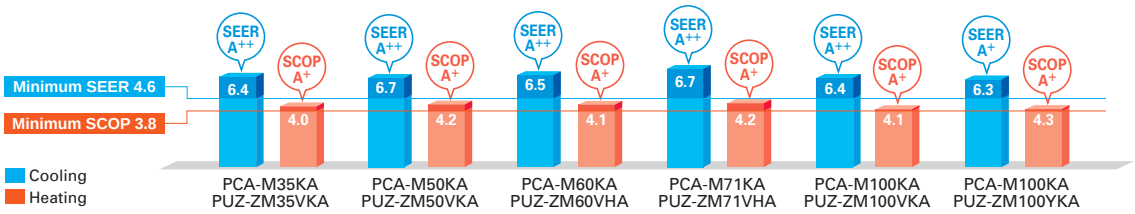

Optional Drain Pump for Full-capacity Models

The pumping height of the optional drain pump has been increased from 400mm to 600mm, expanding flexibility in choosing unit location during installation work.

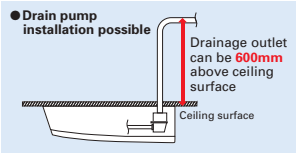

Outside-air Intake

Units are equipped with a knock-out hole that enables the induction of fresh outside-air.

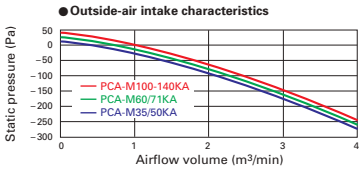

Equipped with Automatic Air-speed Adjustment

In addition to the conventional 4-speed setting, units are now equipped with an automatic air-speed adjustment mode. This setting automatically adjusts the air-speed to conditions that match the room environment. At the start of heating/cooling operation, the airflow is set to high-speed to quickly heat/cool the room. When the room temperature reaches the desired setting, the airflow speed is decreased automatically for stable comfortable heating/cooling operation.

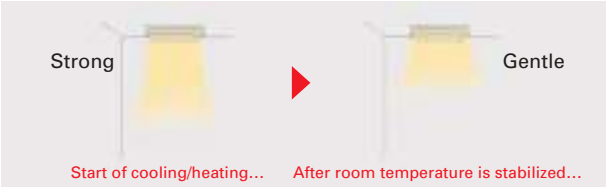

Equipped with High- /Low-ceiling Modes

Units are equipped with high- and low-ceiling operation modes that make it possible to switch the airflow volume to match room height. The ability to choose the optimum airflow volume makes it possible to optimize the breezy sensation felt throughout the room.

Capacity	High ceiling	Standard ceiling	Low ceiling
35	3.5m	2.7m	2.5m
50	3.5m	2.7m	2.5m
60	3.5m	2.7m	2.5m
71	3.5m	2.7m	2.5m
100	4.2m	3.0m	2.6m
125	4.2m	3.0m	2.6m
140	4.2m	3.0m	2.6m

SERIES SELECTION

Power Inverter Series

Indoor Unit

PCA-M35/50/60/71/100/125/140KA

Outdoor Unit

For Single

PUZ-ZM35/50 PUZ-ZM60/71 PUZ-ZM100/125/140

For Multi
(Twin/Triple/Quadruple)

PUZ-ZM71 PUZ-ZM100/125/140/200/250

Remote Controller

Optional

Optional

Optional

Optional

PCZ-M KA Indoor Unit Combinations

Indoor unit combinations shown below are possible.

Indoor Unit Combination		Outdoor Unit Capacity																			
		For Single									For Twin						For Triple			For Quadruple	
		35	50	60	71	100	125	140	200	250	71	100	125	140	200	250	140	200	250	200	250
Power Inverter (PUHZ-ZRP)		35x1	50x1	60x1	71x1	100x1	125x1	140x1	–	–	35x2	50x2	60x2	71x2	100x2	125x2	50x3	60x3	71x3	50x4	60x4
	Distribution Pipe	–	–	–	–	–	–	–	–	–	MSDD-50TR2-E				MSDD-50WR2-E		MSDT-111R3-E			MSDF-1111R2-E	

SERIES SELECTION

Standard Inverter Series

Indoor Unit

PCA-M35/50/60/71/100/125/140KA

Outdoor Unit

For Single

SUZ-M35 SUZ-M50 SUZ-M60/71 PUZ-M100/125/140

For Multi
(Twin/Triple/Quadruple)

PUZ-M100/125/140 PUZ-M200/250

Remote Controller

Optional

Optional

Optional

Optional

PCZ-M KA Indoor Unit Combinations

Indoor unit combinations shown below are possible.

Indoor Unit Combination		Outdoor Unit Capacity																			
		For Single									For Twin						For Triple			For Quadruple	
		35	50	60	71	100	125	140	200	250	71	100	125	140	200	250	140	200	250	200	250
Standard Inverter (PUHZ-P&SUZ)		35x1	50x1	60x1	71x1	100x1	125x1	140x1	–	–	–	50x2	60x2	71x2	100x2	125x2	50x3	60x3	71x3	50x4	60x4
	Distribution Pipe	–	–	–	–	–	–	–	–	–	–	MSDD-50TR2-E			MSDD-50WR2-E		MSDT-111R3-E			MSDF-1111R2-E	

PCA-M KA SERIES
POWER INVERTER

Demand Control (Optional) | Pure White | AUTO VANE | Fresh-air Intake | High-efficiency (Optional) | Long Life | Check! | SWING | High Ceiling | Low Ceiling | AUTO | ACO | Auto Restart | Low Temp Cooling | Silent
60-140V/200/250 Ampere Limit (Optional) | Rotation Back-up (Optional) | SDC (Optional) | Group Control | M-NET connection (Optional) | Wi-Fi Interface (Optional) | COMPO | MXZ connection | Cleaning-free pipe reuse | Wiring Reuse (Optional) | Drain Lift Up (Optional) | Pump Down | Flare connection | Self Diagnosis | Failure Recall

Type				Inverter Heat Pump									
Indoor Unit				PCA-M35KA	PCA-M50KA	PCA-M60KA	PCA-M71KA	PCA-M100KA		PCA-M125KA		PCA-M140KA	
Outdoor Unit				PUZ-ZM35VKA	PUZ-ZM50VKA	PUZ-ZM60VHA	PUZ-ZM71VHA	PUZ-ZM100VKA	PUZ-ZM100YKA	PUZ-ZM125VKA	PUZ-ZM125YKA	PUZ-ZM140VKA	PUZ-ZM140YKA
Refrigerant				R32*1									
Power Supply	Source			Outdoor power supply									
	Outdoor (V/Phase/Hz)			VKA・VHA:230 / Single / 50, YKA:400 / Three / 50									
Cooling	Capacity	Rated	kW	3.6	5.0	6.1	7.1	9.5	9.5	12.5	12.5	13.4	13.4
		Min - Max	kW	1.6 - 4.5	2.3 - 5.6	2.7 - 6.7	3.3 - 8.1	4.9 - 11.4	4.9 - 11.4	5.5 - 14.0	5.5 - 14.0	6.2 - 15.0	6.2 - 15.0
	Total Input	Rated	kW	0.829	1.250	1.521	1.829	2.317	2.317	3.846	3.846	3.941	3.941
	EER			4.34	4.00	4.01	3.88	4.10	4.10	3.25	3.25	3.40	3.40
		EEL Rank		–	–	–	–	–	–	–	–	–	–
	Design Load		kW	3.6	5.0	6.1	7.1	9.5	9.5	–	–	–	–
	Annual Electricity Consumption*2		kWh/a	197	260	328	371	513	523	–	–	–	–
	SEER*4			6.4	6.7	6.5	6.7	6.4	6.3	–	–	–	–
		Energy Efficiency Class		A++	A++	A++	A++	A++	A++	–	–	–	–
Heating (Average Season)	Capacity	Rated	kW	4.1	5.5	7.0	8.0	11.2	11.2	14.0	14.0	16.0	16.0
		Min - Max	kW	1.6-5.2	2.5 - 6.6	2.8 - 8.2	3.5 - 10.2	4.5 - 14.0	4.5 - 14.0	5.0 - 16.0	5.0 - 16.0	5.7 - 18.0	5.7 - 18.0
	Total Input	Rated	kW	1.019	1.361	1.745	2.156	3.018	3.018	3.954	3.954	4.432	4.432
	COP			4.02	4.04	4.01	3.71	3.71	3.71	3.54	3.54	3.61	3.61
		EEL Rank		–	–	–	–	–	–	–	–	–	–
	Design Load		kW	2.4	3.8	4.4	4.7	7.8	7.8	–	–	–	–
	Declared Capacity	at reference design temperature	kW	2.4 (–10°C)	3.8 (–10°C)	4.4 (–10°C)	4.7 (–10°C)	7.8 (–10°C)	7.8 (–10°C)	–	–	–	–
		at bivalent temperature	kW	2.4 (–10°C)	3.8 (–10°C)	4.4 (–10°C)	4.7 (–10°C)	7.8 (–10°C)	7.8 (–10°C)	–	–	–	–
		at operation limit temperature	kW	2.2 (–11°C)	3.7 (–11°C)	2.8 (–20°C)	3.5 (–20°C)	5.8 (–20°C)	5.8 (–20°C)	–	–	–	–
	Back Up Heating Capacity		kW	0	0	0	0	0	0	–	–	–	–
	Annual Electricity Consumption*2		kWh/a	839	1265	1499	1563	2539	2539	–	–	–	–
	SCOP*4			4.0	4.2	4.1	4.2	4.3	4.3	–	–	–	–
		Energy Efficiency Class		A+	A+	A+	A+	A+	A+	–	–	–	–
Operating Current (max)			A	13.3	13.4	19.4	19.4	27.2	8.7	27.3	10.3	28.9	13.9
Indoor Unit	Input	Rated	kW	0.04	0.05	0.06	0.06	0.09	0.09	0.11	0.11	0.14	0.14
	Operating Current (max)		A	0.29	0.37	0.39	0.42	0.65	0.65	0.76	0.76	0.90	0.90
	Dimensions <Panel>	H × W × D	mm	230 - 960 - 680		230 - 1280 - 680		230 - 1600 - 680					
	Weight <Panel>		kg	25	26	32	32	37	37	38	38	40	40
	Air Volume [Lo-Mi2-Mi1-Hi]		m³/min	10-11-12-14	10-11-13-15	15-16-17-19	16-17-18-20	22-24-26-28	22-24-26-28	23-25-27-29	23-25-27-29	24-26-29-32	24-26-29-32
	Sound Level (SPL) [Lo-Mi2-Mi1-Hi]		dB(A)	31-33-36-39	32-34-37-40	33-35-37-40	35-37-39-41	37-39-41-43	37-39-41-43	39-41-43-45	39-41-43-45	41-43-45-48	41-43-45-48
	Sound Level (PWL)		dB(A)	60	60	60	62	63	63	65	65	68	68
Outdoor Unit	Dimensions	H × W × D	mm	630 - 809 - 300		943 - 950 - 330 (+25)		1338 - 1050 - 330 (+40)					
	Weight		kg	46	46	70	70	116	123	116	125	118	131
	Air Volume	Cooling	m³/min	45	45	55	55	110	110	120	120	120	120
		Heating	m³/min	45	45	55	55	110	110	120	120	120	120
	Sound Level (SPL)	Cooling	dB(A)	44	44	47	47	49	49	50	50	50	50
		Heating	dB(A)	46	46	49	49	51	51	52	52	52	52
	Sound Level (PWL)	Cooling	dB(A)	65	65	67	67	69	69	70	70	70	70
	Operating Current (max)		A	13.0	13.0	19.0	19.0	26.5	8.0	26.5	9.5	28.0	13.0
	Breaker Size		A	16	16	25	25	32	16	32	16	40	16
Ext. Piping	Diameter	Liquid / Gas	mm	6.35 / 12.7	6.35 / 12.7	9.52 / 15.88	9.52 / 15.88	9.52 / 15.88	9.52 / 15.88	9.52 / 15.88	9.52 / 15.88	9.52 / 15.88	9.52 / 15.88
	Max. Length	Out-In	m	50	50	55	55	100	100	100	100	100	100
	Max. Height	Out-In	m	30	30	30	30	30	30	30	30	30	30
Guaranteed Operating Range [Outdoor]		Cooling*3	°C	–15 ~ +46	–15 ~ +46	–15 ~ +46	–15 ~ +46	–15 ~ +46	–15 ~ +46	–15 ~ +46	–15 ~ +46	–15 ~ +46	–15 ~ +46
		Heating	°C	–11 ~ +21	–11 ~ +21	–20 ~ +21	–20 ~ +21	–20 ~ +21	–20 ~ +21	–20 ~ +21	–20 ~ +21	–20 ~ +21	–20 ~ +21

*1 Refrigerant leakage contributes to climate change. Refrigerant with lower global warming potential (GWP) would contribute less to global warming than a refrigerant with higher GWP, if leaked to the atmosphere. This appliance contains a refrigerant fluid with a GWP equal to 550. This means that if 1 kg of this refrigerant fluid would be leaked to the atmosphere, the impact on global warming would be 550 times higher than 1 kg of CO_2, over a period of 100 years. Never try to interfere with the refrigerant circuit yourself or disassemble the product yourself and always ask a professional. The GWP of R32 is 675 in the IPCC 4th Assessment Report.
*2 Energy consumption based on standard test results. Actual energy consumption will depend on how the appliance is used and where it is located.
*3 Optional air protection guide is required where ambient temperature is lower than –5°C.
*4 SEER and SCOP are based on 2009/125/EC:Energy-related Products Directive and Regulation(EU) No206/2012.

PCA-M KA SERIES
STANDARD INVERTER

Demand Control (Optional) | Pure White | AUTO VANE | Fresh-air Intake | High-efficiency (Optional) | Long Life | Check! | SWING | High Ceiling | Low Ceiling | AUTO | ACO | Auto Restart | Low Temp Cooling | Silent
60-140V/200/250 Ampere Limit (Optional) | Rotation Back-up (Optional) | SDC (Optional) | Group Control | M-NET connection (Optional) | Wi-Fi Interface (Optional) | COMPO | MXZ connection | Cleaning-free pipe reuse | Wiring Reuse (Optional) | Drain Lift Up (Optional) | Pump Down | Flare connection | Self Diagnosis | Failure Recall

Type				Inverter Heat Pump									
Indoor Unit				PCA-M35KA	PCA-M50KA	PCA-M60KA	PCA-M71KA	PCA-M100KA		PCA-M125KA		PCA-M140KA	
Outdoor Unit				SUZ-M35VA	SUZ-M50VA	SUZ-M60VA	SUZ-M71VA	PUZ-M100VKA	PUZ-M100YKA	PUZ-M125VKA	PUZ-M125YKA	PUZ-M140VKA	PUZ-M140YKA
Refrigerant				R32*1									
Power Supply	Source			Outdoor power supply									
	Outdoor (V/Phase/Hz)			VA・VKA:230 / Single / 50, YKA:400 / Three / 50									
Cooling	Capacity	Rated	kW	3.6	5.0	6.1	7.1	9.5	9.5	12.1	12.1	13.4	13.4
		Min - Max	kW	0.8 - 3.9	1.5 - 5.6	1.6 - 6.3	2.2 - 8.1	4.0 - 10.6	4.0 - 10.6	5.7 - 13.0	5.7 - 13.0	5.7 - 14.1	5.7 - 14.1
	Total Input	Rated	kW	0.90	1.51	1.64	1.97	2.94	2.94	4.01	4.01	5.36	5.36
	EER			4.00	3.30	3.70	3.60	3.23	3.23	3.01	3.01	2.50	2.50
		EEL Rank		–	–	–	–	–	–	–	–	–	–
	Design Load		kW	3.6	5.0	6.1	7.1	9.5	9.5	12.1	12.1	13.4	13.4
	Annual Electricity Consumption*2		kWh/a	198	291	333	381	552	552	–	–	–	–
	SEER*4			6.3	6.0	6.4	6.5	6.0	6.0	–	–	–	–
		Energy Efficiency Class		A++	A+	A++	A++	A+	A+	–	–	–	–
Heating (Average Season)	Capacity	Rated	kW	4.1	6.0	7.0	8.0	11.2	11.2	13.5	13.5	15.0	15.0
		Min - Max	kW	1.0 - 5.0	1.5 - 7.2	1.6 - 8.0	2.0 - 10.2	2.8 - 12.5	2.8 - 12.5	4.1 - 15.0	4.1 - 15.0	4.2 - 15.8	4.2 - 15.8
	Total Input	Rated	kW	1.02	1.61	1.75	2.21	3.28	3.28	3.95	3.95	4.28	4.28
	COP			4.00	3.71	4.00	3.61	3.41	3.41	3.41	3.41	3.50	3.50
		EEL Rank		–	–	–	–	–	–	–	–	–	–
	Design Load		kW	2.6	4.3	4.6	5.8	8.0	8.0	8.5	8.5	9.4	9.4
	Declared Capacity	at reference design temperature	kW	2.3 (–10°C)	3.8 (–10°C)	4.1 (–10°C)	5.2 (–10°C)	6.0 (–10°C)	6.0 (–10°C)	8.5 (–10°C)	8.5 (–10°C)	9.4 (–10°C)	9.4 (–10°C)
		at bivalent temperature	kW	2.3 (–7°C)	3.8 (–7°C)	4.1 (–7°C)	5.2 (–7°C)	7.0 (–7°C)	7.0 (–7°C)	8.5 (–10°C)	8.5 (–10°C)	9.4 (–10°C)	9.4 (–10°C)
		at operation limit temperature	kW	2.3 (–10°C)	3.8 (–10°C)	4.1 (–10°C)	5.2 (–10°C)	4.5 (–15°C)	4.5 (–15°C)	6.0 (–15°C)	6.0 (–15°C)	7.0 (–15°C)	7.0 (–15°C)
	Back Up Heating Capacity		kW	0.3	0.5	0.5	0.6	2.0	2.0	–	–	–	–
	Annual Electricity Consumption*2		kWh/a	909	1456	1555	1971	2719	2719	–	–	–	–
	SCOP*4			4.0	4.1	4.1	4.1	4.1	4.1	–	–	–	–
		Energy Efficiency Class		A+	A+	A+	A+	A+	A+	–	–	–	–
Operating Current (max)			A	8.8	13.9	15.2	15.2	20.7	12.2	27.3	12.3	30.9	12.4
Indoor Unit	Input	Rated	kW	0.04	0.05	0.06	0.06	0.09	0.09	0.11	0.11	0.14	0.14
	Operating Current (max)		A	0.29	0.37	0.39	0.42	0.65	0.65	0.76	0.76	0.90	0.90
	Dimensions <Panel>	H × W × D	mm	230 - 960 - 680		230 - 1280 - 680		230 - 1600 - 680					
	Weight <Panel>		kg	25	26	32	32	37	37	38	38	40	40
	Air Volume [Lo-Mi2-Mi1-Hi]		m³/min	10-11-12-14	10-11-13-15	15-16-17-19	16-17-18-20	22-24-26-28	22-24-26-28	23-25-27-29	23-25-27-29	24-26-29-32	24-26-29-32
	Sound Level (SPL) [Lo-Mi2-Mi1-Hi]		dB(A)	31-33-36-39	32-34-37-40	33-35-37-40	35-37-39-41	37-39-41-43	37-39-41-43	39-41-43-45	39-41-43-45	41-43-45-48	41-43-45-48
	Sound Level (PWL)		dB(A)	60	60	60	62	63	63	65	65	68	68
Outdoor Unit	Dimensions	H × W × D	mm	550 - 800 - 285	714 - 800 - 285	880 - 840 - 330		981 - 1050 - 330 (+40)					
	Weight		kg	35	41	54	55	76	78	84	85	84	85
	Air Volume	Cooling	m³/min	34.3	45.8	50.1	50.1	79.0	79.0	86.0	86.0	86.0	86.0
		Heating	m³/min	32.7	43.7	50.1	50.1	79.0	79.0	92.0	92.0	92.0	92.0
	Sound Level (SPL)	Cooling	dB(A)	48	48	49	49	51	51	54	54	55	55
		Heating	dB(A)	48	49	51	51	54	54	56	56	57	57
	Sound Level (PWL)	Cooling	dB(A)	59	64	65	66	70	70	72	72	73	73
	Operating Current (max)		A	8.5	13.5	14.8	14.8	20.0	11.5	26.5	11.5	30.0	11.5
	Breaker Size		A	10	20	20	20	32	16	32	16	40	16
Ext. Piping	Diameter	Liquid / Gas	mm	6.35 / 9.52	6.35 / 12.7	6.35 / 15.88	9.52 / 15.88	9.52 / 15.88	9.52 / 15.88	9.52 / 15.88	9.52 / 15.88	9.52 / 15.88	9.52 / 15.88
	Max. Length	Out-In	m	20	30	30	30	50	55	65	65	65	65
	Max. Height	Out-In	m	12	30	30	30	30	30	30	30	30	30
Guaranteed Operating Range [Outdoor]		Cooling*3	°C	–10 ~ +46	–15 ~ +46	–15 ~ +46	–15 ~ +46	–15 ~ +46	–15 ~ +46	–15 ~ +46	–15 ~ +46	–15 ~ +46	–15 ~ +46
		Heating	°C	–10 ~ +24	–10 ~ +24	–10 ~ +24	–10 ~ +24	–15 ~ +21	–15 ~ +21	–15 ~ +21	–15 ~ +21	–15 ~ +21	–15 ~ +21

*1 Refrigerant leakage contributes to climate change. Refrigerant with lower global warming potential (GWP) would contribute less to global warming than a refrigerant with higher GWP, if leaked to the atmosphere. This appliance contains a refrigerant fluid with a GWP equal to 550. This means that if 1 kg of this refrigerant fluid would be leaked to the atmosphere, the impact on global warming would be 550 times higher than 1 kg of CO_2, over a period of 100 years. Never try to interfere with the refrigerant circuit yourself or disassemble the product yourself and always ask a professional. The GWP of R32 is 675 in the IPCC 4th Assessment Report.
*2 Energy consumption based on standard test results. Actual energy consumption will depend on how the appliance is used and where it is located.
*3 Optional air protection guide is required where ambient temperature is lower than –5°C.
*4 SEER and SCOP are based on 2009/125/EC:Energy-related Products Directive and Regulation(EU) No206/2012.

SERIES SELECTION

Power Inverter Series

Indoor Unit

PCA-M35/50/60/71/100/125/140KA

Outdoor Unit

R410A

For Single

PUHZ-ZRP35/50

PUHZ-ZRP60/71

PUHZ-ZRP100/125/140

R410A

For Multi
(Twin/Triple/Quadruple)

PUHZ-ZRP100/125/140/200/250

Remote Controller

Optional

Optional

Optional

Optional

Standard Inverter Series

Indoor Unit

PCA-M35/50/60/71/100/125/140KA

Outdoor Unit

R410A

For Single

SUZ-KA35

SUZ-KA50/60/71

PUHZ-P100/125/140

R410A

For Multi
(Twin/Triple/Quadruple)

PUHZ-P100/125/140

PUHZ-P200/250

Remote Controller

Optional

Optional

Optional

Optional

PCA-M KA Indoor Unit Combinations

Indoor unit combinations shown below are possible.

Indoor Unit Combination		Outdoor Unit Capacity																			
		For Single									For Twin						For Triple			For Quadruple	
		35	50	60	71	100	125	140	200	250	71	100	125	140	200	250	140	200	250	200	250
Power Inverter (PUHZ-ZRP)		35x1	50x1	60x1	71x1	100x1	125x1	140x1	–	–	35x2	50x2	60x2	71x2	100x2	125x2	50x3	60x3	71x3	50x4	60x4
	Distribution Pipe	–	–	–	–	–	–	–	–	–	–	MSDD-50TR-E			MSDD-50WR-E		MSDT-111R-E			MSDF-1111R-E	
Standard Inverter (PUHZ-P&SUZ)		35x1	50x1	60x1	71x1	100x1	125x1	140x1	–	–	–	50x2	60x2	71x2	100x2	125x2	50x3	60x3	71x3	50x4	60x4
	Distribution Pipe	–	–	–	–	–	–	–	–	–	–	MSDD-50TR-E			MSDD-50WR-E		MSDT-111R-E			MSDF-1111R-E	

PCA-M KA SERIES

POWER INVERTER

Demand Control (Optional) | Pure White | AUTO VANE | Fresh-air Intake | High-efficiency (Optional) | Long Life | Check! | SWING | High Ceiling | Low Ceiling | AUTO | ACO | Auto Restart | Low Temp Cooling | Silent

60-140V/200/250 Ampere Limit | Rotation Back-up (Optional) | (Optional) | Group Control (Optional) | M-NET connection (Optional) | Wi-Fi Interface (Optional) | COMPO | MXZ connection | Cleaning-free pipe reuse | Wiring Reuse (Optional) | Drain Lift Up (Optional) | Pump Down | Flare connection | Self Diagnosis | Failure Recall

Type				Inverter Heat Pump									
Indoor Unit				PCA-M35KA	PCA-M50KA	PCA-M60KA	PCA-M71KA	PCA-M100KA		PCA-M125KA		PCA-M140KA	
Outdoor Unit				PUHZ-ZRP35VKA2	PUHZ-ZRP50VKA2	PUHZ-ZRP60VHA2	PUHZ-ZRP71VHA2	PUHZ-ZRP100VKA3	PUHZ-ZRP100YKA3	PUHZ-ZRP125VKA3	PUHZ-ZRP125YKA3	PUHZ-ZRP140VKA3	PUHZ-ZRP140YKA3
Refrigerant				R410A*1									
Power Supply	Source			Outdoor power supply									
	Outdoor (V/Phase/Hz)			VKA・VHA:230 / Single / 50, YKA:400 / Three / 50									
Cooling	Capacity	Rated	kW	3.6	5.0	6.1	7.1	9.5	9.5	12.5	12.5	13.4	13.4
		Min - Max	kW	1.6 - 4.5	2.3 - 5.6	2.7 - 6.7	3.3 - 8.1	4.9 - 11.4	4.9 - 11.4	5.5 - 14.0	5.5 - 14.0	6.2 - 15.0	6.2 - 15.0
	Total Input	Rated	kW	0.86	1.34	1.66	1.82	2.42	2.42	3.98	3.98	3.95	3.95
	EER			4.19	3.73	3.67	3.90	3.93	3.93	3.14	3.14	3.39	3.39
		EEL Rank		–	–	–	–	–	–	–	–	–	–
	Design Load		kW	3.6	5.0	6.1	7.1	9.5	9.5	–	–	–	–
	Annual Electricity Consumption*2		kWh/a	202	283	340	367	542	553	–	–	–	–
	SEER*4			6.2	6.1	6.2	6.7	6.1	6.0	–	–	–	–
		Energy Efficiency Class		A++	A++	A++	A++	A++	A+	–	–	–	–
Heating (Average Season)	Capacity	Rated	kW	4.1	5.5	7.0	8.0	11.2	11.2	14.0	14.0	16.0	16.0
		Min - Max	kW	1.6 - 5.2	2.5 - 6.6	2.8 - 8.2	3.5 - 10.2	4.5 - 14.0	4.5 - 14.0	5.0 - 16.0	5.0 - 16.0	5.7 - 18.0	5.7 - 18.0
	Total Input	Rated	kW	1.02	1.45	1.93	2.20	3.04	3.04	3.80	3.80	4.57	4.57
	COP			4.02	3.79	3.63	3.64	3.68	3.68	3.68	3.68	3.50	3.50
		EEL Rank		–	–	–	–	–	–	–	–	–	–
	Design Load		kW	2.4	3.8	4.4	4.7	7.8	7.8	–	–	–	–
	Declared Capacity	at reference design temperature	kW	2.4 (–10°C)	3.8 (–10°C)	4.4 (–10°C)	4.7 (–10°C)	7.8 (–10°C)	7.8 (–10°C)	–	–	–	–
		at bivalent temperature	kW	2.4 (–10°C)	3.8 (–10°C)	4.4 (–10°C)	4.7 (–10°C)	7.8 (–10°C)	7.8 (–10°C)	–	–	–	–
		at operation limit temperature	kW	2.2 (–11°C)	3.7 (–11°C)	2.8 (–20°C)	3.5 (–20°C)	5.8 (–20°C)	5.8 (–20°C)	–	–	–	–
	Back Up Heating Capacity		kW	0	0	0	0	0	0	–	–	–	–
	Annual Electricity Consumption*2		kWh/a	815	1257	1458	1519	2837	2837	–	–	–	–
	SCOP*4			4.1	4.2	4.3	4.3	3.9	3.9	–	–	–	–
		Energy Efficiency Class		A+	A+	A+	A+	A	A	–	–	–	–
Operating Current (max)			A	13.3	13.4	19.4	19.4	27.2	8.7	27.3	10.3	28.9	13.9
Indoor Unit	Input	Rated	kW	0.04	0.05	0.06	0.06	0.09	0.09	0.11	0.11	0.14	0.14
	Operating Current (max)		A	0.29	0.37	0.39	0.42	0.65	0.65	0.76	0.76	0.90	0.90
	Dimensions <Panel>	H × W × D	mm	230 - 960 - 680		230 - 1280 - 680		230 - 1600 - 680					
	Weight <Panel>		kg	25	26	32	32	37	37	38	38	40	40
	Air Volume [Lo-Mi2-Mi1-Hi]		m³/min	10-11-12-14	10-11-13-15	15-16-17-19	16-17-18-20	22-24-26-28	22-24-26-28	23-25-27-29	23-25-27-29	24-26-29-32	24-26-29-32
	Sound Level (SPL) [Lo-Mi2-Mi1-Hi]		dB(A)	31-33-36-39	32-34-37-40	33-35-37-40	35-37-39-41	37-39-41-43	37-39-41-43	39-41-43-45	39-41-43-45	41-43-45-48	41-43-45-48
	Sound Level (PWL)		dB(A)	60	60	60	62	63	63	65	65	68	68
Outdoor Unit	Dimensions	H × W × D	mm	630 - 809 - 300		943 - 950 - 330 (+30)		1338 - 1050 - 330 (+40)					
	Weight		kg	43	46	70	70	116	123	116	125	118	131
	Air Volume	Cooling	m³/min	45	45	55	55	110	110	120	120	120	120
		Heating	m³/min	45	45	55	55	110	110	120	120	120	120
	Sound Level (SPL)	Cooling	dB(A)	44	44	47	47	49	49	50	50	50	50
		Heating	dB(A)	46	46	48	48	51	51	52	52	52	52
	Sound Level (PWL)	Cooling	dB(A)	65	65	67	67	69	69	70	70	70	70
	Operating Current (max)		A	13.0	13.0	19.0	19.0	26.5	8.0	26.5	9.5	28.0	13.0
	Breaker Size		A	16	16	25	25	32	16	32	16	40	16
Ext. Piping	Diameter	Liquid / Gas	mm	6.35 / 12.7	6.35 / 12.7	9.52 / 15.88	9.52 / 15.88	9.52 / 15.88	9.52 / 15.88	9.52 / 15.88	9.52 / 15.88	9.52 / 15.88	9.52 / 15.88
	Max. Length	Out-In	m	50	50	50	50	75	75	75	75	75	75
	Max. Height	Out-In	m	30	30	30	30	30	30	30	30	30	30
Guaranteed Operating Range [Outdoor]		Cooling*3	°C	–15 ~ +46	–15 ~ +46	–15 ~ +46	–15 ~ +46	–15 ~ +46	–15 ~ +46	–15 ~ +46	–15 ~ +46	–15 ~ +46	–15 ~ +46
		Heating	°C	–11 ~ +21	–11 ~ +21	–20 ~ +21	–20 ~ +21	–20 ~ +21	–20 ~ +21	–20 ~ +21	–20 ~ +21	–20 ~ +21	–20 ~ +21

*1 Refrigerant leakage contributes to climate change. Refrigerant with lower global warming potential (GWP) would contribute less to global warming than a refrigerant with higher GWP, if leaked to the atmosphere. This appliance contains a refrigerant fluid with a GWP equal to 1975. This means that if 1 kg of this refrigerant fluid would be leaked to the atmosphere, the impact on global warming would be 1975 times higher than 1 kg of CO_2, over a period of 100 years. Never try to interfere with the refrigerant circuit yourself or disassemble the product yourself and always ask a professional.
The GWP of R410A is 2088 in the IPCC 4th Assessment Report.
*2 Energy consumption based on standard test results. Actual energy consumption will depend on how the appliance is used and where it is located.
*3 Optional air protection guide is required where ambient temperature is lower than –5°C.
*4 SEER and SCOP are based on 2009/125/EC:Energy-related Products Directive and Regulation(EU) No206/2012.

PCA-M KA SERIES

STANDARD INVERTER

PUHZ Demand Control (Optional) | Pure White | AUTO VANE | Fresh-air Intake | High-efficiency (Optional) | Long Life | Check! | SWING | High Ceiling | Low Ceiling | AUTO | ACO | Auto Restart | Low Temp Cooling | PUHZ Silent

PUHZ Rotation Back-up (Optional) | (Optional) | PUHZ Group Control | SUZ Group Control (Optional) | M-NET connection (Optional) | Wi-Fi Interface (Optional) | PUHZ COMPO | MXZ connection | Cleaning-free pipe reuse | PUHZ Wiring Reuse (Optional) | PUHZ Drain Lift Up (Optional) | PUHZ Pump Down | Flare connection | Self Diagnosis | Failure Recall

Type				Inverter Heat Pump									
Indoor Unit				PCA-M35KA	PCA-M50KA	PCA-M60KA	PCA-M71KA	PCA-M100KA		PCA-M125KA		PCA-M140KA	
Outdoor Unit				SUZ-KA35VA6	SUZ-KA50VA6	SUZ-KA60VA6	SUZ-KA71VA6	PUHZ-P100VKA	PUHZ-P100YKA	PUHZ-P125VKA	PUHZ-P125YKA	PUHZ-P140VKA	PUHZ-P140YKA
Refrigerant				R410A*1									
Power Supply	Source			Outdoor power supply									
	Outdoor (V/Phase/Hz)			VA・VKA:230 / Single / 50, YKA:400 / Three / 50									
Cooling	Capacity	Rated	kW	3.6	5.0	5.7	7.1	9.4	9.4	12.1	12.1	13.6	13.6
		Min - Max	kW	1.4 - 3.9	2.3 - 5.6	2.3 - 6.3	2.8 - 8.1	3.7 - 10.6	3.7 - 10.6	5.6 - 13.0	5.6 - 13.0	5.8 - 14.1	5.8 - 14.1
	Total Input	Rated	kW	1.050	1.550	1.720	2.060	3.05	3.05	4.24	4.24	5.62	5.62
	EER			3.43	3.23	3.31	3.45	3.08	3.08	2.85	2.85	2.41	2.41
		EEL Rank		–	–	–	–	–	–	–	–	–	–
	Design Load		kW	3.6	5.0	5.7	7.1	9.4	9.4	–	–	–	–
	Annual Electricity Consumption*2		kWh/a	209	296	325	409	586	586	–	–	–	–
	SEER*4			6.0	5.8	6.1	6.0	5.6	5.6	–	–	–	–
		Energy Efficiency Class		A+	A+	A++	A+	A+	A+	–	–	–	–
Heating (Average Season)	Capacity	Rated	kW	4.1	5.5	6.9	7.9	11.2	11.2	13.5	13.5	15.0	15.0
		Min - Max	kW	1.7 - 5.0	1.7 - 6.6	2.5 - 8.0	2.6 - 10.2	2.8 - 12.5	2.8 - 12.5	4.8 - 15.0	4.8 - 15.0	4.9 - 15.8	4.9 - 15.8
	Total Input	Rated	kW	1.050	1.520	1.910	2.180	3.37	3.37	4.06	4.06	4.47	4.47
	COP			3.90	3.62	3.61	3.62	3.32	3.32	3.32	3.32	3.35	3.35
		EEL Rank		–	–	–	–	–	–	–	–	–	–
	Design Load		kW	2.6	4.0	4.8	5.8	8.0	8.0	–	–	–	–
	Declared Capacity	at reference design temperature	kW	2.3 (–10°C)	3.6 (–10°C)	4.0 (–10°C)	5.2 (–10°C)	6.0 (–10°C)	6.0 (–10°C)	–	–	–	–
		at bivalent temperature	kW	2.3 (–7°C)	3.6 (–7°C)	4.3 (–7°C)	5.2 (–7°C)	7.0 (–7°C)	7.0 (–7°C)	–	–	–	–
		at operation limit temperature	kW	2.3 (–10°C)	3.6 (–10°C)	4.0 (–10°C)	5.2 (–10°C)	4.5 (–15°C)	4.5 (–15°C)	–	–	–	–
	Back Up Heating Capacity		kW	0.3	0.4	0.8	0.6	2.0	2.0	–	–	–	–
	Annual Electricity Consumption*2		kWh/a	887	1398	1678	2028	2726	2726	–	–	–	–
	SCOP*4			4.1	4.0	4.0	4.3	4.1	4.1	–	–	–	–
		Energy Efficiency Class		A+	A+	A+	A+	A+	A+	–	–	–	–
Operating Current (max)			A	8.5	12.4	14.4	16.5	20.7	12.2	27.3	12.3	30.9	12.4
Indoor Unit	Input	Rated	kW	0.04	0.05	0.06	0.06	0.09	0.09	0.11	0.11	0.14	0.14
	Operating Current (max)		A	0.29	0.37	0.39	0.42	0.65	0.65	0.76	0.76	0.90	0.90
	Dimensions <Panel>	H × W × D	mm	230-960-680		230-1280-680		230-1600-680					
	Weight <Panel>		kg	25	26	32	32	37	37	38	38	40	40
	Air Volume [Lo-Mi2-Mi1-Hi]		m³/min	10-11-12-14	10-11-13-15	15-16-17-19	16-17-18-20	22-24-26-28	22-24-26-28	23-25-27-29	23-25-27-29	24-26-29-32	24-26-29-32
	Sound Level (SPL) [Lo-Mi2-Mi1-Hi]		dB(A)	31-33-36-39	32-34-37-40	33-35-37-40	35-37-39-41	37-39-41-43	37-39-41-43	39-41-43-45	39-41-43-45	41-43-45-48	41-43-45-48
	Sound Level (PWL)		dB(A)	60	60	60	62	63	63	65	65	68	68
Outdoor Unit	Dimensions	H × W × D	mm	550 - 800 - 285		880 - 840 - 330		981 - 1050 - 330					
	Weight		kg	35	54	50	53	76	78	84	85	84	85
	Air Volume	Cooling	m³/min	36.3	44.6	40.9	50.1	79	79	86	86	86	86
		Heating	m³/min	34.8	44.6	49.2	48.2	79	79	92	92	92	92
	Sound Level (SPL)	Cooling	dB(A)	49	52	55	55	51	51	54	54	56	56
		Heating	dB(A)	50	52	55	55	54	54	56	56	57	57
	Sound Level (PWL)	Cooling	dB(A)	62	65	65	69	70	70	72	72	75	75
	Operating Current (max)		A	8.2	12.0	14.0	16.1	20.0	11.5	26.5	11.5	30.0	11.5
	Breaker Size		A	10	20	20	20	32	16	32	16	40	16
Ext. Piping	Diameter	Liquid / Gas	mm	6.35 / 9.52	6.35 / 12.7	6.35 / 15.88	9.52 / 15.88	9.52 / 15.88	9.52 / 15.88	9.52 / 15.88	9.52 / 15.88	9.52 / 15.88	9.52 / 15.88
	Max. Length	Out-In	m	20	30	30	30	50	50	50	50	50	50
	Max. Height	Out-In	m	12	30	30	30	30	30	30	30	30	30
Guaranteed Operating Range [Outdoor]		Cooling*3	°C	–10 ~ +46	–15 ~ +46	–15 ~ +46	–15 ~ +46	–15 ~ +46	–15 ~ +46	–15 ~ +46	–15 ~ +46	–15 ~ +46	–15 ~ +46
		Heating	°C	–10 ~ +24	–10 ~ +24	–10 ~ +24	–10 ~ +24	–15 ~ +21	–15 ~ +21	–15 ~ +21	–15 ~ +21	–15 ~ +21	–15 ~ +21

*1 Refrigerant leakage contributes to climate change. Refrigerant with lower global warming potential (GWP) would contribute less to global warming than a refrigerant with higher GWP, if leaked to the atmosphere. This appliance contains a refrigerant fluid with a GWP equal to 1975. This means that if 1 kg of this refrigerant fluid would be leaked to the atmosphere, the impact on global warming would be 1975 times higher than 1 kg of CO_2, over a period of 100 years. Never try to interfere with the refrigerant circuit yourself or disassemble the product yourself and always ask a professional.
The GWP of R410A is 2088 in the IPCC 4th Assessment Report.
*2 Energy consumption based on standard test results. Actual energy consumption will depend on how the appliance is used and where it is located.
*3 Optional air protection guide is required where ambient temperature is lower than –5°C.
*4 SEER and SCOP are based on 2009/125/EC:Energy-related Products Directive and Regulation(EU) No206/2012.

PCA–HA SERIES

PCA-M71HA

Standard features include a strong carbon-black stainless steel body and built-in oil mist filter to prevent oil from getting into the unit providing a comfortable air conditioning environment in kitchens that use open-flame cooking.

Tough on Oily Smoke

A durable stainless steel casing that is resistant to oil and grease is provided to protect the surface of the body. Grimy dirt and stains are removed easily, enabling the unit to be kept clean at all times.

High-performance Oil Mist Filter

A high-performance heavy-duty oil mist filter is included as standard equipment. The filtering system is more efficient than conventional filters, thereby effectively reducing the oily smoke entering the air conditioner. The filter is disposable, thereby enabling trouble-free cleaning and maintenance.

Oil Mist Filter Cleaning

When used in kitchens, the oil mist filter should be replaced once every two months. The system comes with 12 filters elements. After these have been used, optional elements (PAC-SG38KF-E) can be purchased.

Oil mist filter

Pull the handle to easily slide the filter out

Easy Maintenance – Even for Cleaning the Fan

A separate fan casing that can be disassembled in sections is adopted to ensure easy fan cleaning. Drain pan cleaning onsite is also no problem owing to the use of a pipe connector that is easily removed.

Fresh Outside-air Intake (Option)

There is a knock-out opening on the rear panel of the unit that can be used to bring fresh air into the unit. This helps to improve ventilation and make the kitchen comfortable.

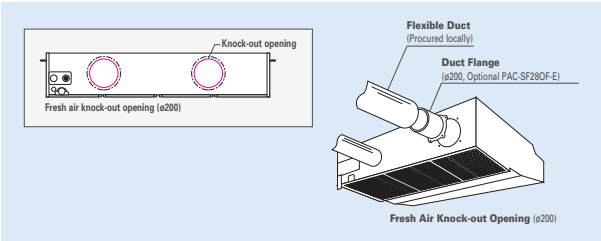

Notes: 1) A fresh-air duct flange is required (sold separately)
2) Intake air is not 100% fresh (outside) air.

Cosmetic Front and Hanging Fixture Covers (Option)

Cosmetic covers are available to prevent the collection of dust and grime on the main body and hanging fixture sections.

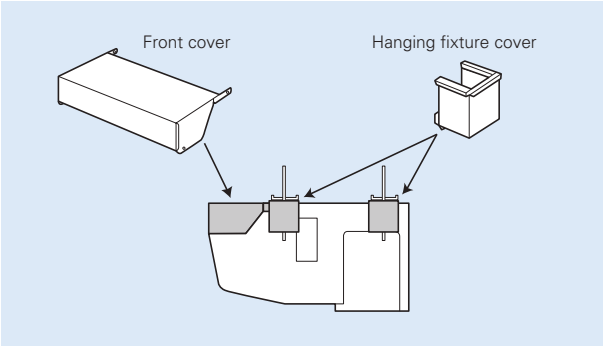

SERIES SELECTION

Power Inverter Series

DC Inverter | 71 Joint Lap | Vector Sine Wave | 100-250 DC Scroll | DC Fan Motor | Vector-Wave | 71 PAM | Power Receiver | Grooved Piping | 71 Heat Caulking Fixing Method

Indoor Unit

R32
R410A

PCA-M71HA

Outdoor Unit

R32

For Single

PUZ-ZM71

R32

For Multi
(Twin/Triple)

PUZ-ZM140/250

Remote Controller

Optional

Optional

Optional

PCA-M HA Indoor Unit Combinations

Indoor unit combinations shown below are possible.

Indoor Unit Combination	Outdoor Unit Capacity																			
	For Single									For Twin						For Triple			For Quadruple	
	35	50	60	71	100	125	140	200	250	71	100	125	140	200	250	140	200	250	200	250
Power Inverter (PUZ-ZM)	–	–	–	71x1	–	–	–	–	–	–	–	–	71x2	–	–	–	–	71x3	–	–
Distribution Pipe	–	–	–	–	–	–	–	–	–	–	–	–	MSDD-50TR2-E	–	–	–	–	MSDT-111R3-E	–	–

SERIES SELECTION

Power Inverter Series

DC Inverter | 71 Joint Lap | Vector Sine Wave | 100-250 DC Scroll | DC Fan Motor | Vector-Wave | 71 PAM | Power Receiver | Grooved Piping | 71 Heat Caulking Fixing Method

Indoor Unit

R32
R410A

PCA-M71HA

Outdoor Unit

R410A

For Single

PUHZ-ZRP71

R410A

For Multi
(Twin/Triple)

PUHZ-ZRP140/250

Remote Controller

Optional

Optional

Optional

PCA-M HA Indoor Unit Combinations

Indoor unit combinations shown below are possible.

Indoor Unit Combination	Outdoor Unit Capacity																			
	For Single									For Twin						For Triple			For Quadruple	
	35	50	60	71	100	125	140	200	250	71	100	125	140	200	250	140	200	250	200	250
Power Inverter (PUHZ-ZRP)	–	–	–	71x1	–	–	–	–	–	–	–	–	71x2	–	–	–	–	71x3	–	–
Distribution Pipe	–	–	–	–	–	–	–	–	–	–	–	–	MSDD-50TR-E	–	–	–	–	MSDT-111R-E	–	–

PCA-M HA SERIES
POWER INVERTER

Demand Control (Optional) | Fresh-air Intake | Oil Mist Filter | Check! | ACO | Auto Restart | Low Temp Cooling | Silent | Ampere Limit | Rotation Back-up (Optional) | (Optional) | Group Control | M-NET connection (Optional) | COMPO | Cleaning-free pipe reuse | Wiring Reuse (Optional) | Pump Down | Flare connection | Self Diagnosis | Failure Recall

Type				Inverter Heat Pump	
Indoor Unit				PCA-M71HA	
Outdoor Unit				PUHZ-ZRP71VHA2	PUZ-ZM71VHA
Refrigerant				R410A DX*1	R32 DX*1
Power Supply	Source			Outdoor power supply	
	Outdoor (V/Phase/Hz)			230 / Single / 50	
Cooling	Capacity	Rated	kW	7.1	7.1
		Min - Max	kW	3.3 - 8.1	3.3 - 8.1
	Total Input	Rated	kW	2.17	2.02
	EER			–	–
		EEL Rank		–	–
	Design Load		kW	7.1	7.1
	Annual Electricity Consumption*2		kWh/a	447	444
	SEER*4			5.6	5.6
		Energy Efficiency Class		A+	A+
Heating (Average Season)	Capacity	Rated	kW	7.6	7.6
		Min - Max	kW	3.5 - 10.2	3.5 - 10.2
	Total Input	Rated	kW	2.35	2.17
	COP			–	–
		EEL Rank		–	–
	Design Load		kW	4.7	4.7
	Declared Capacity	at reference design temperature	kW	4.7	4.7
		at bivalent temperature	kW	4.7	4.7
		at operation limit temperature	kW	3.5	3.7
	Back Up Heating Capacity		kW	0.0	0.0
	Annual Electricity Consumption*2		kWh/a	1751	1673
	SCOP*4			3.8	3.9
		Energy Efficiency Class		A	A
Operating Current (max)			A	19.4	
Indoor Unit	Input	Rated	kW	0.10	
	Operating Current (max)		A	0.43	
	Dimensions <Panel>	H × W × D	mm	280 - 1136 - 650	
	Weight <Panel>		kg	42	
	Air Volume [Lo-Hi]		m³/min	16 - 18	
	Sound Level (SPL) [Lo-Hi]		dB(A)	37 - 39	
	Sound Level (PWL)		dB(A)	57	
Outdoor Unit	Dimensions	H × W × D	mm	943 - 950 - 330 (+30)	943 - 950 - 330 (+25)
	Weight		kg	70	70
	Air Volume	Cooling	m³/min	55.0	55.0
		Heating	m³/min	55.0	55.0
	Sound Level (SPL)	Cooling	dB(A)	47	47
		Heating	dB(A)	48	49
	Sound Level (PWL)	Cooling	dB(A)	67	67
	Operating Current (max)		A	19.0	19.0
	Breaker Size		A	25	25
Ext. Piping	Diameter	Liquid / Gas	mm	9.52 / 15.88	9.52 / 15.88
	Max. Length	Out-In	m	50	55
	Max. Height	Out-In	m	30	30
Guaranteed Operating Range [Outdoor]		Cooling*3	°C	–15 ~ +46	–15 ~ +46
		Heating	°C	–20 ~ +21	–20 ~ +21

*1 Refrigerant leakage contributes to climate change. Refrigerant with lower global warming potential (GWP) would contribute less to global warming than a refrigerant with higher GWP, if leaked to the atmosphere. This appliance contains a refrigerant fluid with a GWP equal to 1975. This means that if 1 kg of this refrigerant fluid would be leaked to the atmosphere, the impact on global warming would be 1975 times higher than 1 kg of CO_2, over a period of 100 years. Never try to interfere with the refrigerant circuit yourself or disassemble the product yourself and always ask a professional.
The GWP of R410A is 2088 in the IPCC 4th Assessment Report.
*2 Energy consumption based on standard test results. Actual energy consumption will depend on how the appliance is used and where it is located.
*3 Optional air protection guide is required where ambient temperature is lower than –5°C.
*4 SEER and SCOP are based on 2009/125/EC:Energy-related Products Directive and Regulation(EU) No206/2012.

PCA-M HA SERIES
POWER INVERTER

Demand Control (Optional) | Fresh-air Intake | Oil Mist Filter | Check! | ACO | Auto Restart | Low Temp Cooling | Silent | Ampere Limit | Rotation Back-up (Optional) | (Optional) | Group Control | M-NET connection (Optional) | COMPO | Cleaning-free pipe reuse | Wiring Reuse (Optional) | Pump Down | Flare connection | Self Diagnosis | Failure Recall

Type				Inverter Heat Pump
Indoor Unit				PCA-M71HA
Outdoor Unit				PUHZ-ZRP71VHA2
Refrigerant				R410A*1
Power Supply	Source			Outdoor power supply
	Outdoor (V/Phase/Hz)			230 / Single / 50
Cooling	Capacity	Rated	kW	7.1
		Min - Max	kW	3.3 - 8.1
	Total Input	Rated	kW	2.17
	EER			–
		EEL Rank		–
	Design Load		kW	7.1
	Annual Electricity Consumption*2		kWh/a	447
	SEER*4			5.6
		Energy Efficiency Class		A+
Heating (Average Season)	Capacity	Rated	kW	7.6
		Min - Max	kW	3.5 - 10.2
	Total Input	Rated	kW	2.35
	COP			–
		EEL Rank		–
	Design Load		kW	4.7
	Declared Capacity	at reference design temperature	kW	4.7 (–10°C)
		at bivalent temperature	kW	4.7 (–10°C)
		at operation limit temperature	kW	3.5 (–20°C)
	Back Up Heating Capacity		kW	0
	Annual Electricity Consumption*2		kWh/a	1751
	SCOP*4			3.8
		Energy Efficiency Class		A
Operating Current (max)			A	19.4
Indoor Unit	Input	Rated	kW	0.09
	Operating Current (max)		A	0.43
	Dimensions <Panel>	H × W × D	mm	280 - 1136 - 650
	Weight <Panel>		kg	41
	Air Volume [Lo-Hi]		m³/min	17 - 19
	Sound Level (SPL) [Lo-Hi]		dB(A)	34 - 38
	Sound Level (PWL)		dB(A)	56
Outdoor Unit	Dimensions	H × W × D	mm	943 - 950 - 330 (+30)
	Weight		kg	70
	Air Volume	Cooling	m³/min	55.0
		Heating	m³/min	55.0
	Sound Level (SPL)	Cooling	dB(A)	47
		Heating	dB(A)	48
	Sound Level (PWL)	Cooling	dB(A)	67
	Operating Current (max)		A	19.0
	Breaker Size		A	25
Ext. Piping	Diameter	Liquid / Gas	mm	9.52 / 15.88
	Max. Length	Out-In	m	50
	Max. Height	Out-In	m	30
Guaranteed Operating Range [Outdoor]		Cooling*3	°C	–15 ~ +46
		Heating	°C	–20 ~ +21

*1 Refrigerant leakage contributes to climate change. Refrigerant with lower global warming potential (GWP) would contribute less to global warming than a refrigerant with higher GWP, if leaked to the atmosphere. This appliance contains a refrigerant fluid with a GWP equal to 1975. This means that if 1 kg of this refrigerant fluid would be leaked to the atmosphere, the impact on global warming would be 1975 times higher than 1 kg of CO_2, over a period of 100 years. Never try to interfere with the refrigerant circuit yourself or disassemble the product yourself and always ask a professional.
The GWP of R410A is 2088 in the IPCC 4th Assessment Report.
*2 Energy consumption based on standard test results. Actual energy consumption will depend on how the appliance is used and where it is located.
*3 Optional air protection guide is required where ambient temperature is lower than –5°C.
*4 SEER and SCOP are based on 2009/125/EC:Energy-related Products Directive and Regulation(EU) No206/2012.

PSA SERIES R410A

Installation of this floor-standing series is easy and quick.
An excellent choice when there is a sudden need for an air conditioner to be installed.

Quick and Easy Installation, Space-saving and Design That Compliments Any Interior

The floor-standing indoor unit is mounted on the floor, enabling quick installation. Its compact body requires only minimal space.

● PSA-RP71KA

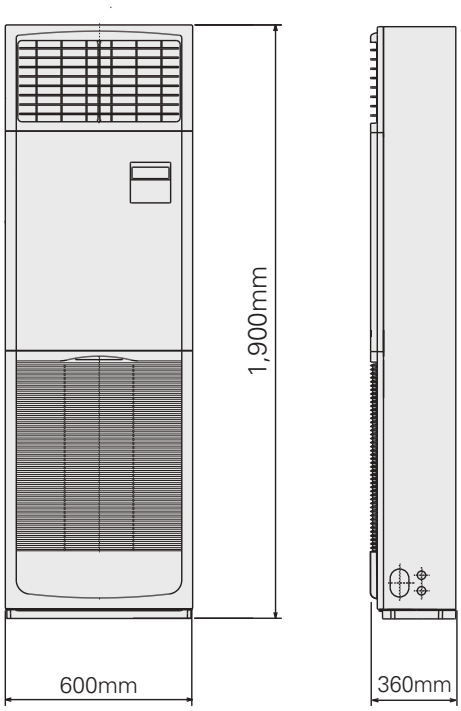

4-way pipe work connections enable greater freedom in installation

Remarkable freedom in choosing installation sites is allowed by providing piping connection to the indoor unit in four places: left side, back, from underneath and on the right side of the unit. Even installation in the corner of a room is easy.

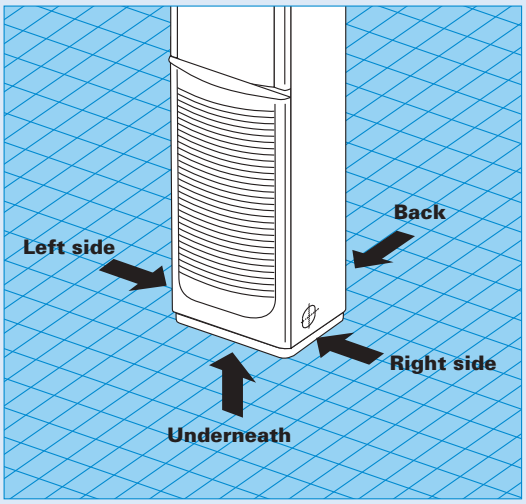

Built-in Remote Controller

Equipped with PAR-40MAA, the latest wired remote controller. Offering excellent readability and a diverse range of functions, the remote controller increases user-friendliness and boosts user satisfaction.

Main Functions

- Multi-language Display
- Limited Temperature Range Setting
- Auto-off Timer
- Operation Lock
- Weekly Timer

SERIES SELECTION

Power Inverter Series

Indoor Unit

R410A

PSA-RP71/100/125/140KA

Outdoor Unit

R410A

For Single

PUHZ-ZRP71

PUHZ-ZRP100/125/140

R410A

For Multi
(Twin/Triple)

PUHZ-ZRP140/200/250

Remote Controller

Built-in

Standard Inverter Series

Indoor Unit

R410A

PSA-RP71/100/125/140KA

Outdoor Unit

R410A

For Single

PUHZ-P100/125/140

R410A

For Multi
(Twin/Triple)

PUHZ-P140

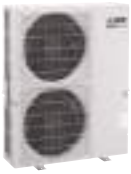

PUHZ-P200/250

Remote Controller

Built-in

PSZ-RP KA Indoor Unit Combinations

Indoor unit combinations shown below are possible.

Indoor Unit Combination		Outdoor Unit Capacity																			
		For Single									For Twin						For Triple			For Quadruple	
		35	50	60	71	100	125	140	200	250	71	100	125	140	200	250	140	200	250	200	250
Power Inverter (PUHZ-ZRP)		–	–	–	71x1	100x1	125x1	140x1	–	–	–	–	–	71x2	100x2	125x2	–	–	71x3	–	–
	Distribution Pipe	–	–	–	–	–	–	–	–	–	–	–	–	MSDD-50TR-E	MSDD-50WR-E		–	–	MSDT-111R-E	–	–
Standard Inverter (PUHZ-P)		–	–	–	–	100x1	125x1	140x1	–	–	–	–	–	71x2	100x2	125x2	–	–	71x3	–	–
	Distribution Pipe	–	–	–	–	–	–	–	–	–	–	–	–	MSDD-50TR-E	MSDD-50WR-E		–	–	MSDT-111R-E	–	–

PSA-RP SERIES
POWER INVERTER

Demand Control (Optional) | Pure White | Long Life | Check! | SWING | ACO | Auto Restart | Low Temp Cooling | Silent | Ampere Limit (71-140V) | Group Control (Optional) | M-NET connection (Optional) | Wi-Fi Interface (Optional) | COMPO | Cleaning-free pipe reuse | Wiring Reuse (Optional) | Pump Down | Flare connection | Self Diagnosis | Failure Recall

Type				Inverter Heat Pump						
Indoor Unit				PSA-RP71KA	PSA-RP100KA		PSA-RP125KA		PSA-RP140KA	
Outdoor Unit				PUHZ-ZRP71VHA2	PUHZ-ZRP100VKA3	PUHZ-ZRP100YKA3	PUHZ-ZRP125VKA3	PUHZ-ZRP125YKA3	PUHZ-ZRP140VKA3	PUHZ-ZRP140YKA3
Refrigerant				R410A*1						
Power Supply	Source			Outdoor power supply						
	Outdoor (V/Phase/Hz)			VKA・VHA:230 / Single / 50, YKA:400 / Three / 50						
Cooling	Capacity	Rated	kW	7.1	9.5	9.5	12.5	12.5	13.4	13.4
		Min - Max	kW	3.3 - 8.1	4.9 - 11.4	4.9 - 11.4	5.5 - 14.0	5.5 - 14.0	6.2 - 15.0	6.2 - 15.0
	Total Input	Rated	kW	1.89	2.50	2.50	4.09	4.09	4.06	4.06
	EER			–	–	–	3.06	3.06	3.30	3.30
		EEL Rank		–	–	–	–	–	–	–
	Design Load		kW	7.1	9.5	9.5	–	–	–	–
	Annual Electricity Consumption*2		kWh/a	396	595	606	–	–	–	–
	SEER*4			6.3	5.6	5.5	–	–	–	–
		Energy Efficiency Class		A++	A+	A	–	–	–	–
Heating (Average Season)	Capacity	Rated	kW	7.6	11.2	11.2	14.0	14.0	16.0	16.0
		Min - Max	kW	3.5 - 10.2	4.5 - 14.0	4.5 - 14.0	5.0 - 16.0	5.0 - 16.0	5.7 - 18.0	5.7 - 18.0
	Total Input	Rated	kW	2.21	3.08	3.08	4.24	4.24	4.79	4.79
	COP			–	–	–	3.30	3.30	3.34	3.34
		EEL Rank		–	–	–	–	–	–	–
	Design Load		kW	4.7	7.8	7.8	–	–	–	–
	Declared Capacity	at reference design temperature	kW	4.7 (–10°C)	7.8 (–10°C)	7.8 (–10°C)	–	–	–	–
		at bivalent temperature	kW	4.7 (–10°C)	7.8 (–10°C)	7.8 (–10°C)	–	–	–	–
		at operation limit temperature	kW	3.5 (–20°C)	5.8 (–20°C)	5.8 (–20°C)	–	–	–	–
	Back Up Heating Capacity		kW	0	0	0	–	–	–	–
	Annual Electricity Consumption*2		kWh/a	1666	2761	2761	–	–	–	–
	SCOP*4			4.0	4.0	4.0	–	–	–	–
		Energy Efficiency Class		A+	A+	A+	–	–	–	–
Operating Current (max)			A	19.4	27.2	8.7	27.2	10.2	28.7	13.7
Indoor Unit	Input	Rated	kW	0.06	0.11	0.11	0.11	0.11	0.11	0.11
	Operating Current (max)		A	0.4	0.71	0.71	0.73	0.73	0.73	0.73
	Dimensions <Panel>	H × W × D	mm	1900 - 600 - 360						
	Weight <Panel>		kg	46	46	46	46	46	48	48
	Air Volume [Lo-Mid-Hi]		m³/min	20 - 22 - 24	25 - 28 - 30	25 - 28 - 30	25 - 28 - 31	25 - 28 - 31	25 - 28 - 31	25 - 28 - 31
	Sound Level (SPL) [Lo-Mid-Hi]		dB(A)	40 - 42 - 44	45 - 49 - 51	45 - 49 - 51	45 - 49 - 51	45 - 49 - 51	45 - 49 - 51	45 - 49 - 51
	Sound Level (PWL)		dB(A)	60	65	65	66	66	66	66
Outdoor Unit	Dimensions	H × W × D	mm	943-950-330(+30)	1338-1050-330(+40)					
	Weight		kg	70	116	123	116	125	118	131
	Air Volume	Cooling	m³/min	55.0	110.0	110.0	120.0	120.0	120.0	120.0
		Heating	m³/min	55.0	110.0	110.0	120.0	120.0	120.0	120.0
	Sound Level (SPL)	Cooling	dB(A)	47	49	49	50	50	50	50
		Heating	dB(A)	48	51	51	52	52	52	52
	Sound Level (PWL)	Cooling	dB(A)	67	69	69	70	70	70	70
	Operating Current (max)		A	19.0	26.5	8.0	26.5	9.5	28.0	13.0
	Breaker Size		A	25	32	16	32	16	40	16
Ext. Piping	Diameter	Liquid / Gas	mm	9.52 / 15.88	9.52 / 15.88	9.52 / 15.88	9.52 / 15.88	9.52 / 15.88	9.52 / 15.88	9.52 / 15.88
	Max. Length	Out-In	m	50	75	75	75	75	75	75
	Max. Height	Out-In	m	30	30	30	30	30	30	30
Guaranteed Operating Range [Outdoor]		Cooling*3	°C	–15 ~ +46	–15 ~ +46	–15 ~ +46	–15 ~ +46	–15 ~ +46	–15 ~ +46	–15 ~ +46
		Heating	°C	–20 ~ +21	–20 ~ +21	–20 ~ +21	–20 ~ +21	–20 ~ +21	–20 ~ +21	–20 ~ +21

*1 Refrigerant leakage contributes to climate change. Refrigerant with lower global warming potential (GWP) would contribute less to global warming than a refrigerant with higher GWP, if leaked to the atmosphere. This appliance contains a refrigerant fluid with a GWP equal to 1975. This means that if 1 kg of this refrigerant fluid would be leaked to the atmosphere, the impact on global warming would be 1975 times higher than 1 kg of CO_2, over a period of 100 years. Never try to interfere with the refrigerant circuit yourself or disassemble the product yourself and always ask a professional.
The GWP of R410A is 2088 in the IPCC 4th Assessment Report.
*2 Energy consumption based on standard test results. Actual energy consumption will depend on how the appliance is used and where it is located.
*3 Optional air protection guide is required where ambient temperature is lower than –5°C.
*4 SEER and SCOP are based on 2009/125/EC:Energy-related Products Directive and Regulation(EU) No206/2012.

PSA-RP SERIES
STANDARD INVERTER

Demand Control (Optional) | Pure White | Long Life | Check! | SWING | ACO | Auto Restart | Low Temp Cooling | Silent | Group Control (Optional) | M-NET connection (Optional) | Wi-Fi Interface (Optional) | COMPO | Cleaning-free pipe reuse | Wiring Reuse (Optional) | Pump Down | Flare connection | Self Diagnosis | Failure Recall

Type				Inverter Heat Pump					
Indoor Unit				PSA-RP100KA		PSA-RP125KA		PSA-RP140KA	
Outdoor Unit				PUHZ-P100VKA	PUHZ-P100YKA	PUHZ-P125VKA	PUHZ-P125YKA	PUHZ-P140VKA	PUHZ-P140YKA
Refrigerant				R410A*1					
Power Supply	Source			Outdoor power supply					
	Outdoor (V/Phase/Hz)			VKA:230 / Single / 50, YKA:400 / Three / 50					
Cooling	Capacity	Rated	kW	9.4	9.4	12.1	12.1	13.6	13.6
		Min - Max	kW	3.7 - 10.6	3.7 - 10.6	5.6 - 13.0	5.6 - 13.0	5.8 - 13.7	5.8 - 13.7
	Total Input	Rated	kW	3.12	3.12	5.02	5.02	6.38	6.38
	EER			3.01	3.01	2.41	2.41	2.13	2.13
		EEL Rank		–	–	–	–	–	–
	Design Load		kW	9.4	9.4	–	–	–	–
	Annual Electricity Consumption*2		kWh/a	644	644	–	–	–	–
	SEER*4			5.1	5.1	–	–	–	–
		Energy Efficiency Class		A	A	–	–	–	–
Heating (Average Season)	Capacity	Rated	kW	11.2	11.2	13.5	13.5	15.0	15.0
		Min - Max	kW	2.8 - 12.5	2.8 - 12.5	4.8 - 15.0	4.8 - 15.0	4.9 - 15.8	4.9 - 15.8
	Total Input	Rated	kW	3.28	3.28	4.80	4.80	4.82	4.82
	COP			3.41	3.41	2.81	2.81	3.11	3.11
		EEL Rank		–	–	–	–	–	–
	Design Load		kW	8.0	8.0	–	–	–	–
	Declared Capacity	at reference design temperature	kW	6.0 (–10°C)	6.0 (–10°C)	–	–	–	–
		at bivalent temperature	kW	7.0 (–7°C)	7.0 (–7°C)	–	–	–	–
		at operation limit temperature	kW	4.5 (–15°C)	4.5 (–15°C)	–	–	–	–
	Back Up Heating Capacity		kW	2.0	2.0	–	–	–	–
	Annual Electricity Consumption*2		kWh/a	2794	2794	–	–	–	–
	SCOP*4			4.0	4.0	–	–	–	–
		Energy Efficiency Class		A+	A+	–	–	–	–
Operating Current (max)			A	20.7	12.2	27.2	12.2	30.7	12.2
Indoor Unit	Input	Rated	kW	0.11	0.11	0.11	0.11	0.11	0.11
	Operating Current (max)		A	0.71	0.71	0.73	0.73	0.73	0.73
	Dimensions <Panel>	H × W × D	mm	1900 - 600 - 360					
	Weight <Panel>		kg	46	46	46	46	48	48
	Air Volume [Lo-Mid-Hi]		m³/min	25 - 28 - 30	25 - 28 - 30	25 - 28 - 31	25 - 28 - 31	25 - 28 - 31	25 - 28 - 31
	Sound Level (SPL) [Lo-Mid-Hi]		dB(A)	45 - 49 - 51	45 - 49 - 51	45 - 49 - 51	45 - 49 - 51	45 - 49 - 51	45 - 49 - 51
	Sound Level (PWL)		dB(A)	65	65	66	66	66	66
Outdoor Unit	Dimensions	H × W × D	mm	981 - 1050 - 330		981 - 1050 - 330		981 - 1050 - 330	
	Weight		kg	76	78	84	85	84	85
	Air Volume	Cooling	m³/min	79	79	86	86	86	86
		Heating	m³/min	79	79	92	92	92	92
	Sound Level (SPL)	Cooling	dB(A)	51	51	54	54	56	56
		Heating	dB(A)	54	54	56	56	57	57
	Sound Level (PWL)	Cooling	dB(A)	70	70	72	72	75	75
	Operating Current (max)		A	20.0	11.5	26.5	11.5	30.0	11.5
	Breaker Size		A	32	16	32	16	40	16
Ext. Piping	Diameter	Liquid / Gas	mm	9.52 / 15.88	9.52 / 15.88	9.52 / 15.88	9.52 / 15.88	9.52 / 15.88	9.52 / 15.88
	Max. Length	Out-In	m	50	50	50	50	50	50
	Max. Height	Out-In	m	30	30	30	30	30	30
Guaranteed Operating Range [Outdoor]		Cooling*3	°C	–15 ~ +46	–15 ~ +46	–15 ~ +46	–15 ~ +46	–15 ~ +46	–15 ~ +46
		Heating	°C	–15 ~ +21	–15 ~ +21	–15 ~ +21	–15 ~ +21	–15 ~ +21	–15 ~ +21

*1 Refrigerant leakage contributes to climate change. Refrigerant with lower global warming potential (GWP) would contribute less to global warming than a refrigerant with higher GWP, if leaked to the atmosphere. This appliance contains a refrigerant fluid with a GWP equal to 1975. This means that if 1 kg of this refrigerant fluid would be leaked to the atmosphere, the impact on global warming would be 1975 times higher than 1 kg of CO_2, over a period of 100 years. Never try to interfere with the refrigerant circuit yourself or disassemble the product yourself and always ask a professional.
The GWP of R410A is 2088 in the IPCC 4th Assessment Report.
*2 Energy consumption based on standard test results. Actual energy consumption will depend on how the appliance is used and where it is located.
*3 Optional air protection guide is required where ambient temperature is lower than –5°C.
*4 SEER and SCOP are based on 2009/125/EC:Energy-related Products Directive and Regulation(EU) No206/2012.

MULTI SPLIT

SERIES

SELECTION

Choose from types of indoor units and outdoor units that can run up to six indoor units each.
Create the system that best matches room shapes and number of rooms.

R32 INDOOR UNITS

Wall-mounted

MSZ-LN (18•25•35•50)

MSZ-EF

MSZ-AP25-50
MSZ-AP15-20

MSZ-AP60VG

MSZ-BT

Cassette

SLZ

MLZ-KP

Floor-standing

MFZ-KT

Ceiling-suspended

PCA

Ceiling-concealed

SEZ

PEAD

R32 OUTDOOR UNITS

2-port
up to 2 indoor units

MXZ-2F33VF3
MXZ-2F42VF3
MXZ-2F53VF(H)3

MXZ-2F53VFHZ

3-port
up to 3 indoor units

MXZ-3F54VF3
MXZ-3F68VF3

4-port
up to 4 indoor units

MXZ-4F72VF3
MXZ-4F80VF3

MXZ-4F83VF

MXZ-4F83VFHZ

5-port
up to 5 indoor units

MXZ-5F102VF

6-port
up to 6 indoor units

MXZ-6F122VF

R410A INDOOR UNITS

Wall-mounted

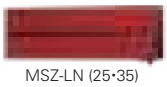
MSZ-LN (25•35)

MSZ-AP25-50
MSZ-AP15-20

MSZ-EF

MSZ-SF25-50
MSZ-SF15-20

MSZ-GF

Cassette

SLZ

MLZ-KP

PLA

Floor-standing

MFZ-KJ

Ceiling-suspended

PCA

Ceiling-concealed

SEZ

PEAD

R410A OUTDOOR UNITS

2-port
up to 2 indoor units

MXZ-2D33VA
MXZ-2D42VA2
MXZ-2D53VA(H)2

MXZ-2E53VAHZ

3-port
up to 3 indoor units

MXZ-3E54VA
MXZ-3E68VA

4-port
up to 4 indoor units

MXZ-4E72VA

MXZ-4E83VA

MXZ-4E83VAHZ

5-port
up to 5 indoor units

MXZ-5E102VA

6-port
up to 6 indoor units

MXZ-6D122VA2

CHECK SYSTEM COMPATIBILITY

Possible combinations depends on the outdoor unit chosen. Please check the following points.

Check Indoor Units

Refer to the "Indoor Unit Compatibility Table" to check if the indoor units selected can be used with the outdoor unit selected. (Indoor units not listed in the table cannot be used.)

Check Indoor Unit Capacity Combination

Refer to the "Combination Table" to check if the capacity combination of the indoor unit selected is connectable. (Combinations not listed cannot be connected.)

If the desired combination cannot be found, please change either the indoor or outdoor unit to match one of the combinations shown in the tables.

MXZ SERIES

Advancements in the MXZ Series include efficiency and flexibility in system expansion capabilities. The best solution when requiring multi-system air conditioning needs.

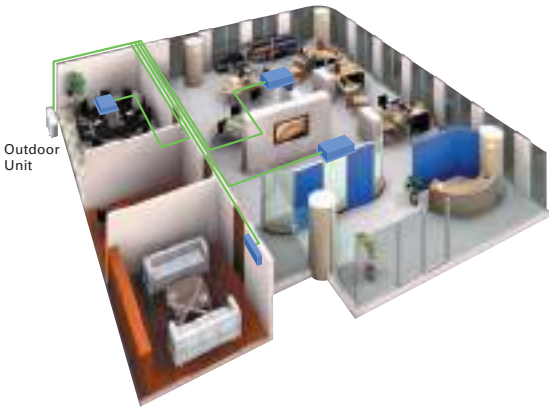

2-port

MXZ-2F33VF3
MXZ-2F42VF3
MXZ-2F53VF(H)3

3-port 4-port

MXZ-3F54VF3
MXZ-3F68VF3
MXZ-4F72VF3
MXZ-4F80VF3

4-port 5-port

MXZ-4F83VF
MXZ-5F102VF

6-port

MXZ-6F122VF

EXAMPLE SYSTEM

MXZ-4F72VF system

Units can be used even if it is connected to only one indoor unit (4F83/5F102/6F122)

This unit can be used even if it is connected to only one indoor unit. This offers more flexibility for wide range of application that satisfies various customers' demand.

No necessity for refrigerant charging

Depending on the pipe length and the indoor units that are connected, conventional models have required refrigerant charging, but no R32 MXZ model needs to be charged with additional refrigerant. This eliminates troublesome work at the site of installation, and reduces the amount of additional work for the installer.

Handle Up to 6 Rooms with a Single Outdoor Unit

The MXZ Series for R32 offers a ten-system line-up to choose from, ranging between 3.3 and 12.2kW. All of them are compatible with specific M, S and P series indoor units. A single outdoor unit can handle a wide range of building layouts.

Support Functions

Wiring/Piping Correction Function* (3F54/3F68/4F72/4F80/4F83/5F102/6F122)

Simply press a single button to confirm if wiring and piping are properly connected. Wiring errors are corrected automatically when discovered. This eliminates the need to confirm complicated wiring connections when expanding the system. (For details, refer to the outdoor unit installation manual.)

* Function cannot be used when the outdoor temperature is below 0°C.
The correction process requires 10–20 minutes to complete and must be conducted with the unit set to the "Cooling" mode.

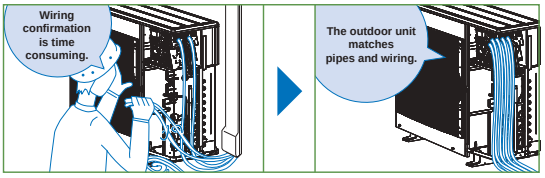

Operation Lock

To accommodate specific use applications, cooling or heating operation can be specified when setting the control board of the outdoor unit. A convenient option when a system needs to be configured for exclusive cooling or heating service. (For details, refer to the outdoor unit installation manual.)

MXZ SERIES
INVERTER MULTI

Type (Inverter Multi - Split Heat Pump)				Up to 2 Indoor Units				Up to 3 Indoor Units		Up to 4 Indoor Units			Up to 5 Indoor Units
Indoor Unit				Please refer to *3									
Outdoor Unit				MXZ-2F33VF3	MXZ-2F42VF3	MXZ-2F53VF3	MXZ-2F53VFH3	MXZ-3F54VF3	MXZ-3F68VF3	MXZ-4F72VF3	MXZ-4F80VF3	MXZ-4F83VF3	MXZ-5F102VF
Refrigerant				R32*1									
Power Supply	Source			Outdoor power supply									
	Outdoor (V/Phase/Hz)			220 - 230 - 240V / Single / 50Hz									
Cooling	Capacity	Rated	kW	3.3	4.2	5.3	5.3	5.4	6.8	7.2	8.0	8.3	10.2
	Input	Rated	kW	0.85	0.98	1.40	1.40	1.32	1.84	1.85	2.25	1.97	2.80
	EER*3			3.88	4.29	3.79	3.79	4.10	3.70	3.89	3.56	4.21	3.64
	Design Load		kW	3.3	4.2	5.3	5.3	5.4	6.8	7.2	8.0	8.3	10.2
	Annual Electricity Consumption*2		kWh/a	189	169	216	216	222	301	311	368	342	436
	SEER*3,*5			6.1	8.7	8.6	8.6	8.5	7.9	8.1	7.6	8.5	8.2
		Energy Efficiency Class*3		A++	A+++	A+++	A+++	A+++	A++	A++	A++	A+++	A++
Heating (Average Season)	Capacity	Rated	kW	4.0	4.5	6.4	6.4	7.0	8.6	8.6	8.8	9.3	10.5
	Input	Rated	kW	0.91	0.88	1.56	1.56	1.40	1.91	1.87	2.00	2.00	2.28
	COP*3			4.40	5.11	4.10	4.10	5.00	4.50	4.60	4.40	4.65	4.60
	Design Load		kW	2.7	3.5	3.5	3.5	5.2	6.8	7.0	7.0	7.0	7.4
	Declared Capacity	at reference design temperature	kW	2.2	2.7	2.7	2.7	4.2	5.7	5.6	5.6	5.8	5.9
		at bivalent temperature	kW	2.4	2.9	2.9	2.9	4.7	6.4	6.2	6.2	6.2	6.4
		at operation limit temperature	kW	1.6	2.3	2.3	2.1	3.2	4.6	4.8	4.8	4.9	4.9
	Back Up Heating Capacity		kW	0.5	0.8	0.8	0.8	1.0	1.1	1.4	1.4	1.2	1.5
	Annual Electricity Consumption*2		kWh/a	944	1065	1065	1089	1583	2321	2389	2389	2087	2205
	SCOP*3,*5			4.0	4.6	4.6	4.5	4.6	4.1	4.1	4.1	4.7	4.7
		Energy Efficiency Class*3		A+	A++	A++	A+	A++	A+	A+	A+	A++	A++
Operating Current (max)			A	10.0	12.2	12.2	12.2	18.0	18.0	18.0	18.0	21.4	21.4
Outdoor Unit	Dimensions	H × W × D	mm	550 - 800 (+69) - 285 (+59.5)				710 - 840 (+30) - 330 (+66)				796 - 950 - 330	
	Weight		kg	33	37	37	38	58	58	59	59	62	62
	Air Volume	Cooling	m³/min	31.5	28.4	32.7	32.7	31	35.4	35.4	40.3	57	63
		Heating	m³/min	32.3	33.5	34.7	34.7	31	39.6	42.7	44.1	62	75
	Sound Level (SPL)	Cooling	dB(A)	49	44	46	46	46	48	48	50	49	52
		Heating	dB(A)	50	50	51	51	50	53	54	55	51	56
	Sound Level (PWL)	Cooling	dB(A)	60	59	61	61	60	63	63	65	61	65
	Operating Current	Cooling	A	4.3 - 4.1 - 3.9	4.9 - 4.7 - 4.5	6.5 - 6.2 - 6.0	6.5 - 6.2 - 6.0	6.0 - 5.7 - 5.5	8.4 - 8.0 - 7.7	8.5 - 8.1 - 7.8	10.3 - 9.9 - 9.5	9.1 - 8.7 - 8.3	12.9 - 12.3 - 11.8
		Heating	A	4.6 - 4.4 - 4.2	4.4 - 4.3 - 4.1	7.5 - 7.1 - 6.8	7.5 - 7.1 - 6.8	6.4 - 6.1 - 5.9	8.8 - 8.4 - 8.0	8.6 - 8.2 - 7.9	9.2 - 8.8 - 8.4	9.2 - 8.8 - 8.4	10.5 - 10.0 - 9.6
	Breaker Size		A	15	15	15	15	25	25	25	25	25	25
Ext. Piping	Port Diameter	Liquid / Gas	mm	6.35 x 2 / 9.52 x 2	6.35 x 2 / 9.52 x 2	6.35 x 2 / 9.52 x 2	6.35 x 2 / 9.52 x 2	6.35 x 3 / 9.52 x 3	6.35 x 3 / 9.52 x 3	6.35 × 4 / 12.7 × 1 + 9.52 × 3			6.35x5/12.7x1+9.52x4
	Total Piping Length (max)		m	20	30	30	30	50	60	60	60	70	80
	Each Indoor Unit Piping Length (max)		m	15	20	20	20	25	25	25	25	25	25
	Max. Height		m	10	15(15)	15(15)	15(15)	15(15)	15(15)	15(15)	15(15)	15	15
	Chargeless Length		m	20	30	30	30	50	60	60	60	70	80
Guaranteed Operating Range [Outdoor]		Cooling	℃	–10 ~ +46			–10 ~ +46	–10 ~ +46					
		Heating	℃	–15 ~ +24			–20 ~ +24	–15 ~ +24					

Type (Inverter Multi - Split Heat Pump)				Up to 6 Indoor Units
Indoor Unit				Please refer to (*4)
Outdoor Unit				MXZ-6F122VF
Refrigerant				R32*1
Power Supply	Source			Outdoor power supply
	Outdoor (V/Phase/Hz)			220 - 230 - 240V / Single / 50
Cooling	Capacity	Rated	kW	12.2
	Input	Rated	kW	3.66
	EER*4			3.33
Heating	Capacity	Rated	kW	14.0
	Input	Rated	kW	3.31
	COP*4			4.23
Operating Current (max)			A	29.8
Outdoor Unit	Dimensions	H × W × D	mm	1048 - 950 - 330
	Weight		kg	87
	Air Volume	Cooling	m³/min	63
		Heating	m³/min	77
	Sound Level (SPL)	Cooling	dB(A)	55
		Heating	dB(A)	57
	Sound Level (PWL)	Cooling	dB(A)	69
	Breaker Size		A	32
Ext. Piping	Diameter	Liquid	mm	6.35 x 6
		Gas	mm	12.7 x 1 + 9.52 x 5
	Total Piping Length (max)		m	80
	Each Indoor Unit Piping Length (max)		m	25
	Max. Height		m	15
	Chargeless Length		m	80
Guaranteed Operating Range [Outdoor]		Cooling	℃	–10 ~ +46
		Heating	℃	–15 ~ +24

*1 Refrigerant leakage contributes to climate change. Refrigerant with lower global warming potential (GWP) would contribute less to global warming than a refrigerant with higher GWP, if leaked to the atmosphere. This appliance contains a refrigerant fluid with a GWP equal to 550. This means that if 1 kg of this refrigerant fluid would be leaked to the atmosphere, the impact on global warming would be 550 times higher than 1 kg of CO_2, over a period of 100 years. Never try to interfere with the refrigerant circuit yourself or disassemble the product yourself and always ask a professional.
The GWP of R32 is 675 in the IPCC 4th Assessment Report.

*2 Energy consumption based on standard test results.
Actual energy consumption will depend on how the appliance is used and where it is located.

*3 EER/COP, SEER/SCOP values and energy efficiency class are measured when connected to the indoor units listed below.
MXZ-2F33VF3 → MSZ-AP15VG + MSZ-LN18VG2
MXZ-2F42VF3 → MSZ-LN18VG2 + MSZ-LN25VG2
MXZ-2F53VF(H)3 → MSZ-LN18VG2 + MSZ-LN35VG2
MXZ-3F54VF3 → MSZ-LN18VG2 + MSZ-LN18VG2 + MSZ-LN18VG2
MXZ-3F68VF3 → MSZ-LN18VG2 + MSZ-LN25VG2 + MSZ-LN25VG2
MXZ-4F72VF3 → MSZ-LN18VG2 + MSZ-LN18VG2 + MSZ-LN18VG2 + MSZ-LN18VG2
MXZ-4F80VF3 → MSZ-LN18VG2 + MSZ-LN18VG2 + MSZ-LN18VG2 + MSZ-LN25VG2
MXZ-4F83VF → MSZ-LN18VG2 + MSZ-LN18VG2 + MSZ-LN25VG2 + MSZ-LN25VG2
MXZ-5F102VF → MSZ-LN18VG2 + MSZ-LN18VG2 + MSZ-LN18VG2 + MSZ-LN25VG2 + MSZ-LN25VG2

*4 EER/COP, values and energy efficiency class are measured when connected to the indoor units listed below.
MXZ-6F122VF → MSZ-LN18VG2 + MSZ-LN18VG2 +MSZ-LN18VG2 + MSZ-LN18VG2 + MSZ-LN25VG2 + MSZ-LN25VG2

*5 SEER and SCOP are based on 2009/125/EC:Energy-related Products Directive and Regulation(EU) No206/2012.

MXZ SERIES

Advancements in the MXZ Series include efficiency and flexibility in system expansion capabilities. The best solution when requiring multi-system air conditioning needs.

R410A

2-port

MXZ-2D33VA
MXZ-2D42VA2
MXZ-2D53VA (H)2

R410A

3-port 4-port

MXZ-3E54VA
MXZ-3E68VA
MXZ-4E72VA

R410A

4-port 5-port

MXZ-4E83VA
MXZ-5E102VA

R410A

6-port

MXZ-6D122VA2

EXAMPLE SYSTEM

MXZ-6D122VA2 system

Handle Up to 6 Rooms with a Single Outdoor Unit

The MXZ Series offers a nine-system line-up to choose from, ranging between 3.3 and 12.2kW. All of them are compatible with specific M, S and P series indoor units. A single outdoor unit can handle a wide range of building layouts.

Support Functions

Wiring/Piping Correction Function* (3E54/3E68/4E72/4E83/5E102/6D122)

Simply press a single button to confirm if wiring and piping are properly connected. Wiring errors are corrected automatically when discovered. This eliminates the need to confirm complicated wiring connections when expanding the system. (For details, refer to the outdoor unit installation manual.)

* Function cannot be used when the outdoor temperature is below 0°C.
The correction process requires 10–20 minutes to complete and must be conducted with the unit set to the "Cooling" mode.

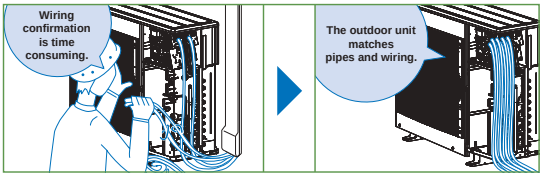

Ampere Limit Adjustment*
(4E83/5E102/6D122)

Dipswitch settings can be used to adjust the maximum electrical current for operation. This function is highly recommended for managing energy costs. (For details, refer to the outdoor unit installation manual.)

* Maximum capacity is lowered with the use of this function.

Operation Lock

To accommodate specific use applications, cooling or heating operation can be specified when setting the control board of the outdoor unit. A convenient option when a system needs to be configured for exclusive cooling or heating service. (For details, refer to the outdoor unit installation manual.)

MXZ SERIES
INVERTER MULTI

Type (Inverter Multi - Split Heat Pump)				Up to 2 Indoor Units				Up to 3 Indoor Units		Up to 4 Indoor Units		Up to 5 Indoor Units
Indoor Unit				Please refer to (*4)								
Outdoor Unit				N: MXZ-2D33VA	N: MXZ-2D42VA2	N: MXZ-2D53VA2	N: MXZ-2D53VAH2	N: MXZ-3E54VA	N: MXZ-3E68VA	N: MXZ-4E72VA	MXZ-4E83VA	MXZ-5E102VA
Refrigerant				R410A*1								
Power Supply	Source			Outdoor power supply								
	Outdoor (V/Phase/Hz)			220 - 230 - 240V / Single / 50								
Cooling	Capacity	Rated	kW	3.3	4.2	5.3	5.3	5.4	6.8	7.2	8.3	10.2
		Min - Max	kW	1.1 - 3.8	1.1 - 4.4	1.1 - 5.6	1.1 - 5.6	2.9 - 6.8	2.9 - 8.4	3.7 - 8.8	3.7 - 9.2	3.9 - 11.0
	Input (Indoor+Outdoor)	Rated	kW	0.90	1.00	1.54	1.54	1.35	2.19	2.25	2.44	3.15
	Design Load		kW	3.3	4.2	5.3	5.3	5.4	6.8	7.2	8.3	10.2
	Annual Electricity Consumption*2		kWh/a	211	216	262	262	295	425	443	460	537
	SEER*4,*7			5.5	6.8	7.1	7.1	6.4	5.6	5.7	6.3	6.6
		Energy Efficiency Class*4		A	A++	A++	A++	A++	A+	A+	A++	A++
Heating (Average Season)	Capacity	Rated	kW	4.0	4.5	6.4	6.4	7.0	8.6	8.6	9.3	10.5
		Min - Max	kW	1.0 - 4.1	1.0 - 4.8	1.0 - 7.0	1.0 - 7.0	2.6 - 9.0	2.6 - 10.6	3.4 - 10.7	3.4 - 11.6	4.1 - 14.0
	Input (Indoor+Outdoor)	Rated	kW	0.96	0.93	1.70	1.70	1.59	2.38	2.28	2.00	2.34
	Design Load		kW	2.7	3.2	4.5	4.5	5.0	6.8	7.0	8.7	8.9
	Declared Capacity	at reference design temperature	kW	2.1	2.7	3.7	3.6	4.0	5.4	5.6	7.1	7.3
		at bivalent temperature	kW	2.4	3.0	4.0	4.0	4.49	6.0	6.2	7.8	7.9
		at operation limit temperature	kW	1.7	2.3	3.3	3.0	3.17	4.4	4.7	6.0	6.3
	Back Up Heating Capacity		kW	0.6	0.5	0.8	0.9	1.0	1.4	1.4	1.6	1.6
	Annual Electricity Consumption*2		kWh/a	926	1065	1507	1546	1751	2466	2516	2889	2958
	SCOP*4,*7			4.1	4.2	4.2	4.1	4.0	3.9	3.9	4.2	4.2
		Energy Efficiency Class*4		A+	A+	A+	A+	A+	A	A	A+	A+
Max. Operating Current (Indoor+Outdoor)			A	10.0	12.2	12.2	12.2	18.0	18.0	18.0	21.4	21.4
Outdoor Unit	Dimensions	H × W × D	mm	550 - 800(+69) - 285(+59.5)				710 - 840(+30) - 330(+66)			796 - 950 - 330	
	Weight		kg	32	37	37	38	58	58	59	63	64
	Air Volume	Cooling	m^3/min	32.9	27.7	32.9	32.9	42.1	42.1	42.1	55.6	65.1
		Heating	m^3/min	33.7	33.3	33.3	33.3	43.0	43.0	43.0	55.6	68.0
	Sound Level (SPL)	Cooling	dB(A)	49	46	50	50	50	50	50	49	52
		Heating	dB(A)	50	51	53	53	53	53	53	51	56
	Sound Level (PWL)	Cooling	dB(A)	63	60	64	64	64	64	64	61	65
	Breaker Size		A	10	15	15	15	25	25	25	25	25
Ext. Piping	Diameter	Liquid	mm	6.35 × 2	6.35 × 2	6.35 × 2	6.35 × 2	6.35 x 3	6.35 x 3	6.35 x 4	6.35 × 4	6.35 × 5
		Gas	mm	9.52 × 2	9.52 × 2	9.52 × 2	9.52 × 2	9.52 x 3	9.52 x 3	12.7×1+9.52×3	12.7×1+9.52×3	12.7×1+9.52×4
	Total Piping Length (max)		m	20	30	30	30	50	60	60	70	80
	Each Indoor Unit Piping Length (max)		m	15	20	20	20	25	25	25	25	25
	Max. Height		m	10	15 (10)*3	15 (10)*3	15 (10)*3	15 (10)*3	15 (10)*3	15 (10)*3	15 (10)*3	15 (10)*3
	Chargeless Length		m	20	20	20	20	40	40	40	25	0
Guaranteed Operating Range [Outdoor]		Cooling	℃	–10 ~ +46	–10 ~ +46	–10 ~ +46	–10 ~ +46	–10 ~ +46	–10 ~ +46	–10 ~ +46	–10 ~ +46	–10 ~ +46
		Heating	℃	–15 ~ +24	–15 ~ +24	–15 ~ +24	–20 ~ +24	–15 ~ +24	–15 ~ +24	–15 ~ +24	–15 ~ +24	–15 ~ +24

N: Please refer to the NOTE below.

Type (Inverter Multi - Split Heat Pump)				Up to 6 Indoor Units
Indoor Unit				Please refer to (*5)
Outdoor Unit				MXZ-6D122VA2
Refrigerant				R410A*1
Power Supply	Source			Outdoor power supply
	Outdoor (V/Phase/Hz)			220 - 230 - 240V / Single / 50
Cooling	Capacity	Rated	kW	12.2
		Min - Max	kW	3.5 - 13.5
	Input*5	Rated	kW	3.66
	EER*6			3.33
		EEL Rank		A
Heating	Capacity	Rated	kW	14.0
		Min - Max	kW	3.5 - 16.5
	Input*5	Rated	kW	3.31
	COP*6			4.23
		EEL Rank		A
Operating Current (max)*5			A	26.8
Outdoor Unit	Dimensions	H × W × D	mm	1048-950-330
	Weight		kg	88
	Air Volume	Cooling	m^3/min	63.0
		Heating	m^3/min	77.0
	Sound Level (SPL)	Cooling	dB(A)	55
		Heating	dB(A)	57
	Sound Level (PWL)	Cooling	dB(A)	70
	Breaker Size		A	32
Ext. Piping	Diameter	Liquid	mm	6.35×6
		Gas	mm	12.7 × 1 + 9.52 × 5
	Total Piping Length (max)		m	80
	Each Indoor Unit Piping Length (max)		m	25
	Max. Height		m	15 (10)*3
	Chargeless Length		m	30
Guaranteed Operating Range [Outdoor]		Cooling	℃	–10 ~ +46
		Heating	℃	–15 ~ +24

NOTE

When connecting the MFZ-KJ series indoor unit(s) to this outdoor unit, charge additional refrigerant according to the instructions in the diagram below.

MXZ-2D33VA

No. of MFZ-KJ indoor units	Pipe length (L) ~20m	Maximum amount of refrigerant
1 unit	100g additional (Total 1250g)	1250g
2 units	Not available (Only one MFZ-KJ series indoor unit can be connected.)	

MXZ-2D42VA2 MXZ-2D53VA2 MXZ-2D53VAH2

No. of MFZ-KJ indoor units	Pipe length (L) ~20m	Pipe length (L) ~30m	Maximum amount of refrigerant
1 unit	100g additional (Total 1400g)	100g+{(L-20)m×20g/m)}	1600g
2 units	200g additional (Total 1500g)	200g+{(L-20)m×20g/m)}	1700g

MXZ-3E54VA

No. of MFZ-KJ indoor units	Pipe length (L) ~40m	Pipe length (L) ~50m	Maximum amount of refrigerant
1 unit	100g additional (Total 2800g)	100g+{(L-40)m×20g/m)}	3000g
2 units	200g additional (Total 2900g)	200g+{(L-40)m×20g/m)}	3100g
3 units	300g additional (Total 3000g)	300g+{(L-40)m×20g/m)}	3200g

MXZ-3E68VA MXZ-4E72VA

No. of MFZ-KJ indoor units	Pipe length (L) ~40m	Pipe length (L) ~60m	Maximum amount of refrigerant
1 unit	100g additional (Total 2800g)	100g+{(L-40)m×20g/m)}	3200g
2 units	200g additional (Total 2900g)	200g+{(L-40)m×20g/m)}	3300g
3 units	300g additional (Total 3000g)	300g+{(L-40)m×20g/m)}	3400g

*1 Refrigerant leakage contributes to climate change. Refrigerant with lower global warming potential (GWP) would contribute less to global warming than a refrigerant with higher GWP, if leaked to the atmosphere. This appliance contains a refrigerant fluid with a GWP equal to 1975. This means that if 1kg of this refrigerant fluid would be leaked to the atmosphere, the impact on global warming would be 1975 times higher than 1kg of CO_2, over a period of 100 years. Never try to interfere with the refrigerant circuit yourself or disassemble the product yourself and always ask a professional.
*2 Energy consumption based on standard test results. Actual energy consumption will depend on how the appliance is used and where it is located.
*3 If the outdoor unit is installed higher than the indoor unit, max. height is reduced to 10m.
*4 EER/COP, EEL rank, SEER/SCOP values and energy efficiency class are measured when connected to the indoor units listed below.
MXZ-2D33VA → MSZ-SF15VA + MSZ-EF18VE
MXZ-2D42VA2 → MSZ-EF18VE + MSZ-EF25VE
MXZ-2D53VA(H)2 → MSZ-EF18VE + MSZ-EF35VE
MXZ-3E54VA → MSZ-EF18VE + MSZ-EF18VE + MSZ-EF18VE
MXZ-3E68VA → MSZ-EF18VE + MSZ-EF25VE + MSZ-EF25VE
MXZ-4E72VA → MSZ-EF18VE + MSZ-EF18VE + MSZ-EF18VE + MSZ-EF18VE
MXZ-4E83VA → MSZ-EF18VE + MSZ-EF18VE + MSZ-EF22VE + MSZ-EF25VE
MXZ-5E102VA → MSZ-EF18VE + MSZ-EF18VE + MSZ-EF22VE + MSZ-EF22VE + MSZ-EF22VE
*5 Power input and operating current (max) figures are for outdoor unit only
*6 EER/COP, EEL rank, values and energy efficiency class are measured when connected to the indoor units listed below.
MXZ-6D122VA2 → MSZ-EF18VE + MSZ-EF18VE + MSZ-EF18VE + MSZ-EF18VE + MSZ-EF25VE + MSZ-EF25VE
*7 SEER and SCOP are based on 2009/125/EC:Energy-related Products Directive and Regulation(EU) No206/2012.

MXZ-HA SERIES

Multi-port outdoor units exclusively for MSZ-HR indoor units.

2-port

MXZ-2HA40VF
MXZ-2HA50VF

3-port

MXZ-3HA50VF

Stylish Design with Flat Panel Front

A stylish flat panel design is employed for the front of the indoor unit.
The simple look matches room aesthetics.

Easy to create various combinations

Wide range of simple combinations only possible using multi-port outdoor units.

Two bedrooms

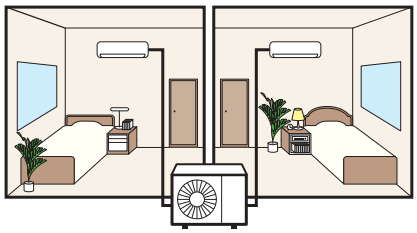

Three bedrooms

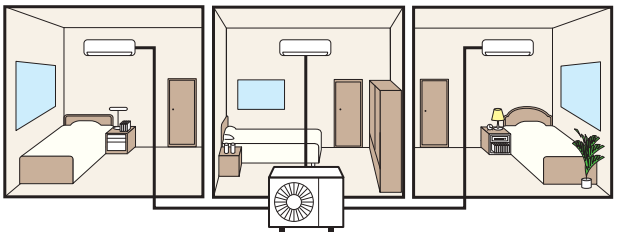

Living room and one bedroom

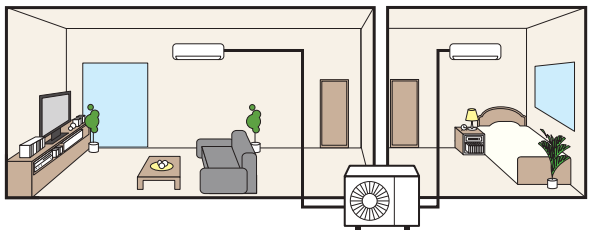

Wide living room

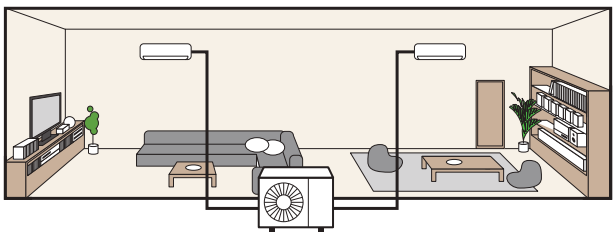

MXZ-HA SERIES

INVERTER MULTI

Type (Inverter Multi - Split Heat Pump)				Up to 2 Indoor Units		Up to 3 Indoor Units
Indoor Unit				Please refer to (*4)		
Outdoor Unit				MXZ-2HA40VF	MXZ-2HA50VF	MXZ-3HA50VF
Refrigerant				R32*1		
Power Supply	Source			Outdoor power supply		
	Outdoor (V/Phase/Hz)			220-230-240 / Single / 50		
Cooling	Capacity	Rated	kW	4.0	5.0	5.0
	Input*4	Rated	kW	1.05	1.52	1.26
	EER*4			3.81	3.29	3.97
		EEL Rank*4		A	A	A
	Design Load		kW	4.0	5.0	5.0
	Annual Electricity Consumption*2		kWh/a	172	225	241
	SEER*4,*5			8.12	7.78	7.26
		Energy Efficiency Class*4		A++	A++	A++
Heating (Average Season)	Capacity	Rated	kW	4.3	6.0	6.0
	Input	Rated	kW	0.91	1.54	1.30
	COP*4			4.73	3.90	4.62
		EEL Rank*4		A	A	A
	Design Load		kW	3.2	3.2	4.0
	Declared Capacity	at reference design temperature	kW	2.4	2.4	3.0
		at bivalent temperature	kW	2.9	2.9	3.6
		at operation limit temperature	kW	2.1	2.1	2.6
	Back Up Heating Capacity		kW	0.8	0.8	1.0
	Annual Electricity Consumption*2		kWh/a	1043	1043	1394
	SCOP*4,*5			4.30	4.30	4.02
		Energy Efficiency Class*4		A+	A+	A+
Operating Current (max)			A	12.2	12.2	18.0
Outdoor Unit	Dimensions	H × W × D	mm	550 - 800 (+69) - 285 (+59.5)	550 - 800 (+69) - 285 (+59.5)	710 - 840 (+30) - 330 (+66)
	Weight		kg	37	37	57
	Air Volume	Cooling	m^3/min	28.4	32.7	31.0
		Heating	m^3/min	33.5	34.7	29.1
	Sound Level (SPL)	Cooling	dB(A)	44	47	46
		Heating	dB(A)	50	51	50
	Sound Level (PWL)	Cooling	dB(A)	59	64	61
	Operating Current	Cooling	A	4.9	6.8	5.6
		Heating	A	4.6	6.9	5.8
	Breaker Size		A	15	15	25
Ext. Piping	Port Diameter	Liquid / Gas	mm	6.35 × 2 / 9.52 × 2	6.35 × 2 / 9.52 × 2	6.35 × 3 / 9.52 × 3
	Total Piping Length (max)		m	30	30	50
	Each Indoor Unit Piping Length (max)		m	20	20	25
	Max. Height		m	15 (10)*3	15 (10)*3	15 (10)*3
	Chargeless Length		m	30	30	40
Guaranteed Operating Range [Outdoor]		Cooling	℃	–10 ~ +46		
		Heating	℃	–15 ~ +24		

*1 Refrigerant leakage contributes to climate change. Refrigerant with lower global warming potential (GWP) would contribute less to global warming than a refrigerant with higher GWP, if leaked to the atmosphere. This appliance contains a refrigerant fluid with a GWP equal to 550. This means that if 1 kg of this refrigerant fluid would be leaked to the atmosphere, the impact on global warming would be 550 times higher than 1 kg of CO_2, over a period of 100 years. Never try to interfere with the refrigerant circuit yourself or disassemble the product yourself and always ask a professional.
The GWP of R32 is 675 in the IPCC 4th Assessment Report

*2 Energy consumption based on standard test results.Actual energy consumption will depend on how the appliance is used and where it is located.

*3 If the outdoor unit is installed higher than the indoor unit, max hight is reduced to 10m.

*4 EER/COP, SEER/SCOP values and energy efficiency class are measured when connected to the indoor units listed below.
MXZ-2HA40VF MSZ-HR25VF + MSZ-HR25VF
MXZ-2HA50VF MSZ-HR25VF + MSZ-HR25VF
MXZ-3HA50VF MSZ-HR25VF + MSZ-HR25VF + MSZ-HR25VF

*5 SEER and SCOP are based on 2009/125/EC:Energy-related Products Directive and Regulation(EU) No206/2012.

MXZ-DM SERIES

Multi-port outdoor units exclusively for MSZ-HJ and DM indoor units.

R410A

2-port

MXZ-2DM40VA

R410A

3-port

MXZ-3DM50VA

Stylish Design with Flat Panel Front

A stylish flat panel design is employed for the front of the indoor unit.
The simple look matches room aesthetics.

Easy to create various combinations

Wide range of simple combinations only possible using multi-port outdoor units.

Two bedrooms

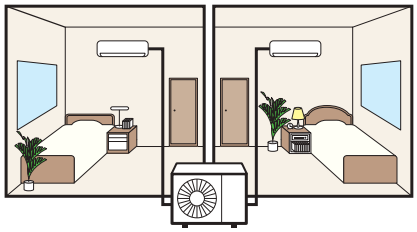

Three bedrooms

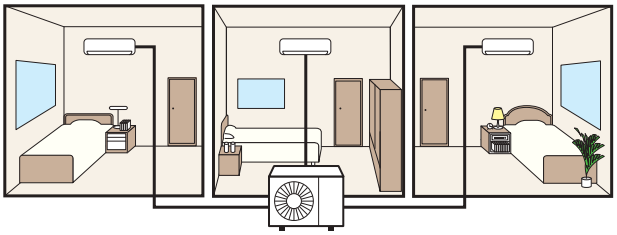

Living room and one bedroom

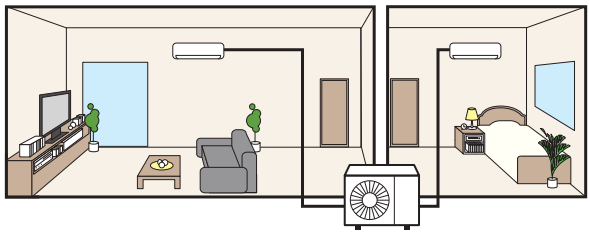

Wide living room

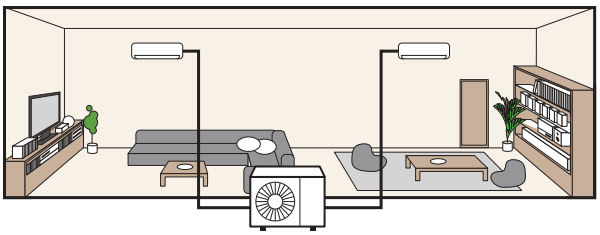

Attention MXZ-DM is exclusively for connection to MSZ-HJ and DM.
Please check to make sure that wiring is done correctly.

For MXZ-DM

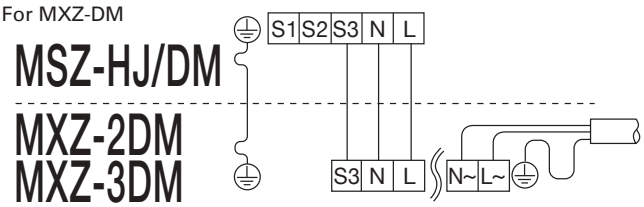

For MSZ-HJ/DM / MUZ-HJ/DM

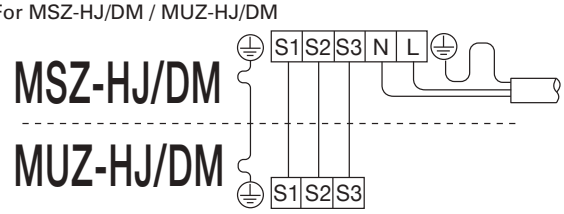

MXZ-DM SERIES

INVERTER MULTI

Type (Inverter Multi - Split Heat Pump)				Up to 2 Indoor Units	Up to 3 Indoor Units
Indoor Unit				Please refer to (*4)	
Outdoor Unit				MXZ-2DM40VA	MXZ-3DM50VA
Refrigerant				R410A*1	
Power Supply	Source			Outdoor power supply	
	Outdoor (V/Phase/Hz)			230 / Single / 50	
Cooling	Capacity	Rated	kW	4.0	5.0
	Input*4	Rated	kW	1.05	1.13
	EER*4			3.81	4.42
		EEL Rank*4		A	A
	Design Load		kW	4.0	5.0
	Annual Electricity Consumption*2		kWh/a	226	283
	SEER*4,*5			6.1	6.1
		Energy Efficiency Class*4		A++	A++
Heating (Average Season)	Capacity	Rated	kW	4.3	6.0
	Input	Rated	kW	1.16	1.31
	COP*4			3.71	4.58
		EEL Rank*4		A	A
	Design Load		kW	3.2	4.0
	Declared Capacity	at reference design temperature	kW	2.73	3.34
		at bivalent temperature	kW	3.01	3.73
		at operation limit temperature	kW	2.27	2.70
	Back Up Heating Capacity		kW	0.47	0.66
	Annual Electricity Consumption*2		kWh/a	1105	1455
	SCOP*4,*5			4.0	3.8
		Energy Efficiency Class*4		A+	A
Operating Current (max)			A	12.2	18.0
Outdoor Unit	Dimensions	H × W × D	mm	550 - 800 (+69) - 285 (+59.5)	710 - 840 (+30) - 330 (+66)
	Weight		kg	32	57
	Air Volume	Cooling	m^3/min	29.2	37.5
		Heating	m^3/min	31.9	39.6
	Sound Level (SPL)	Cooling	dB(A)	48	50
		Heating	dB(A)	52	53
	Sound Level (PWL)	Cooling	dB(A)	63	64
	Operating Current	Cooling	A	5.1	5.0
		Heating	A	5.6	5.8
	Breaker Size		A	15	25
Ext. Piping	Port Diameter	Liquid / Gas	mm	6.35 × 2 / 9.52 × 2	6.35 × 3 / 9.52 × 3
	Total Piping Length (max)		m	30	50
	Each Indoor Unit Piping Length (max)		m	20	25
	Max. Height		m	15 (10)*3	15 (10)*3
	Chargeless Length		m	20	40
Guaranteed Operating Range [Outdoor]		Cooling	℃	–10 ~ +46	
		Heating	℃	–15 ~ +24	

*1 Refrigerant leakage contributes to climate change. Refrigerant with lower global warming potential (GWP) would contribute less to global warming than a refrigerant with higher GWP, if leaked to the atmosphere. This appliance contains a refrigerant fluid with a GWP equal to 1975. This means that if 1 kg of this refrigerant fluid would be leaked to the atmosphere, the impact on global warming would be 1975 times higher than 1 kg of CO_2, over a period of 100 years. Never try to interfere with the refrigerant circuit yourself or disassemble the product yourself and always ask a professional.
*2 Energy consumption based on standard test results.Actual energy consumption will depend on how the appliance is used and where it is located.
*3 If the outdoor unit is installed higher than the indoor unit, max hight is reduced to 10m.
*4 EER/COP, EEL rank, SEER/SCOP values and energy efficiency class are measured when connected to the indoor units listed below.
MXZ-2DM40VA MSZ-DM25VA + MSZ-DM25VA
MXZ-3DM50VA MSZ-DM25VA + MSZ-DM25VA + MSZ-DM25VA
*5 SEER and SCOP are based on 2009/125/EC:Energy-related Products Directive and Regulation(EU) No206/2012.

PUMY-SP SERIES

Air conditioning system supports replacement work by simplifying the installation process. Ideal for supporting renewal needs at small offices and stores, home offices, etc.

R410A

PUMY-SP112/125/140VKM(-BS)
PUMY-SP112/125/140YKM(-BS)

EXAMPLE SYSTEM

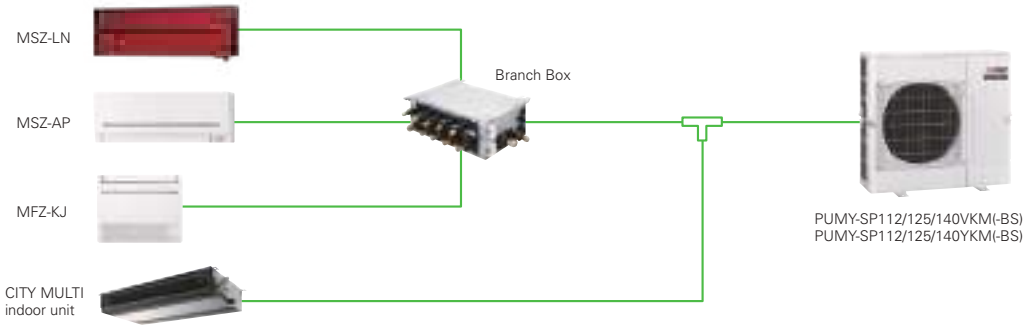

Light weight and compact size

Compact design fits into narrow outdoor unit space of condominiums and offices.
Light weight design facilitates easy installation and transportation.

PUMY-P112/125/140 YKM4(-BS)

Height	1,338mm
Weight	125kg

PUMY-SP112/125/140YKM(-BS)

Height	981mm	27% reduction
Weight	94kg	25% reduction

Unobstructive, compact, and easy to hide from view

Conventional 2-fan type outdoor units may spoil the view. Due to its compact size, the new outdoor fan unit can be installed in locations that would have been inappropriate.

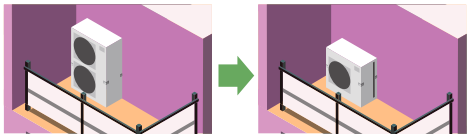

Easy installation and transportation

The reduced weight and height allow for better transportation performance. Carrying and installing become easier.

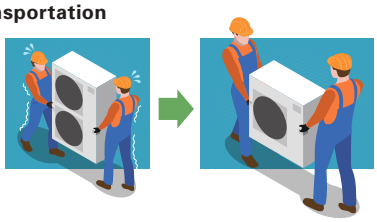

Industry's top energy efficiency*

Even with its compact size and light weight, it has a high EER and COP. Costs are reduced with the industry's best energy saving abilities.

* As of sep.2017.Among VRF outdoor unit of 1fan.
(An incompany investigation)

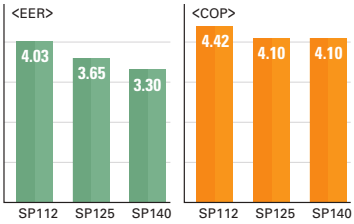

Super silent mode*

Noise level can be reduced up to 10dB(A). This allows you to operate the unit even in the night in a residential zone.

*Capacity reduction differs by mode setting.
*PAC-SC36NA-E is required to activate Super Silent mode.

An external static pressure of 30Pa

The installation location is flexible, thanks to its 30Pa static pressure. You can install it in locations that you could not before.

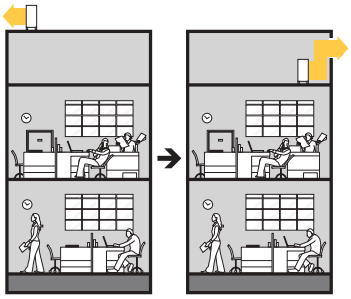

An external static pressure of 30Pa allows outdoor unit to be installed on balconies in high-rise building or spaces near louvers.

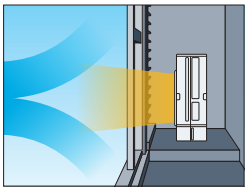

*Noise level will increase when using this function.

Rear piping is available

Freedom with layout due to its piping pullout locations in four directions

The in-door unit allows piping from any four directions; front, back, bottom, or right. This enables easier horizontal connection for collective layout.
The out-door unit with an expanded piping layout flexibility greatly improves piping workability.

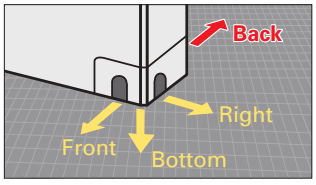

PUMY-SP SERIES
INVERTER MULTI

Model				PUMY-SP112VKM(-BS)	PUMY-SP125VKM(-BS)	PUMY-SP140VKM(-BS)	PUMY-SP112YKM(-BS)	PUMY-SP125YKM(-BS)	PUMY-SP140YKM(-BS)
Power Source				1-phase 220 - 230 - 240V 50Hz / 220V 60Hz			3-phase 380 - 400 - 415V 50Hz / 380V 60Hz		
Cooling Capacity (nominal)	*1		kW	12.5	14.0	15.5	12.5	14.0	15.5
	Power Input		kW	3.10	3.84	4.70	3.10	3.84	4.70
	Current Input		A	14.38 - 13.75 - 13.18 / 14.38	17.81 - 17.04 - 16.33 / 17.81	21.80 - 20.85 - 19.88 / 21.80	4.96 - 4.71 - 4.54 / 4.96	6.14 - 5.83 - 5.62 / 6.14	7.52 - 7.14 - 6.88 / 7.52
	EER		kW/kW	4.03	3.65	3.30	4.03	3.65	3.30
Temp. Range of Cooling*4	Indoor Temp.		W.B.	15.0 - +24.0°C	15.0 - +24.0°C	15.0 - +24.0°C	15.0 - +24.0°C	15.0 - +24.0°C	15.0 - +24.0°C
	Outdoor Temp.	*3	D.B.	-5.0 - 52.0°C	-5.0 - 52.0°C	-5.0 - 52.0°C	-5.0 - 52.0°C	-5.0 - 52.0°C	-5.0 - 52.0°C
Heating Capacity (nominal)		*2	kW	14.0	16.0	16.5	14.0	16.0	16.5
	Power Input		kW	3.17	3.90	4.02	3.17	3.90	4.02
	Current Input		A	14.70 - 14.06 - 13.48 / 14.70	18.09 - 17.30 - 16.58 / 18.09	18.65 - 17.83 - 17.09 / 18.65	5.07 - 4.82 - 4.64 / 5.07	6.24 - 5.93 - 5.71 / 6.24	6.43 - 6.11 - 5.89 / 6.43
	COP		kW/kW	4.42	4.10	4.10	4.42	4.10	4.10
Temp. Range of Heating	Indoor Temp.		D.B.	15.0 - 27.0°C	15.0 - 27.0°C	15.0 - 27.0°C	15.0 - 27.0°C	15.0 - 27.0°C	15.0 - 27.0°C
	Outdoor Temp.		W.B.	-20.0 - +15.0°C	-20.0 - +15.0°C	-20.0 - +15.0°C	-20.0 - +15.0°C	-20.0 - +15.0°C	-20.0 - +15.0°C
Indoor Unit Connectable	Total Capacity			50 to 130% of outdoor unit capacity					
	Model / Quantity		City Multi	10 - 140 / 9	10 - 140 / 10	10 - 140 / 12	10 - 140 / 9	10 - 140 / 10	10 - 140 / 12
			Branch Box*9	15 - 100 / 8	15 - 100 / 8	15 - 100 / 8	15 - 100 / 8	15 - 100 / 8	15 - 100 / 8
		Mixed System, Branch Box 1 unit	City Multi	10 - 140 / 5	10 - 140 / 5	10 - 140 / 5	10 - 140 / 5	10 - 140 / 5	10 - 140 / 5
			Branch Box	15 - 100 / 5	15 - 100 / 5	15 - 100 / 5	15 - 100 / 5	15 - 100 / 5	15 - 100 / 5
		Mixed System, Branch Box 2 units	City Multi	10 - 140 / 3 or 2*7	10 - 140 / 3	10 - 140 / 3	10 - 140 / 3 or 2*7	10 - 140 / 3	10 - 140 / 3
			Branch Box	15 - 100 / 7 or 8*7	15 - 100 / 8	15 - 100 / 8	15 - 100 / 7 or 8*7	15 - 100 / 8	15 - 100 / 8
Sound Pressure Level (Cooling / Heating)			dB <A>	52 / 54	53 / 56	54 / 56	52 / 54	53 / 56	54 / 56
Sound Power Level (Cooling)			dB <A>	72	73	74	72	73	74
Refrigerant Piping Diameter	Liquid Pipe		mm	9.52 Flare					
	Gas Pipe		mm	15.88 Flare					
Fan	Type × Quantity			Propeller Fan × 1					
	Air Flow Rate		m³/min	77	83	83	77	83	83
			L/s	1,283	1,383	1,383	1,283	1,383	1,383
			cfm	2,719	2,931	2,931	2,719	2,931	2,931
	Motor Output		kW	0.20					
	External Static Press.		Pa	0 Pa / 30 Pa*8					
Compressor	Type × Quantity			Twin rotary hermetic compressor × 1					
	Starting Method			Inverter					
	Motor Output		kW	3.1	3.5	3.7	3.1	3.5	3.7
External Dimensions (H × W × D)			mm	981×1,050×330 (+40)					
Net Weight			kg (lbs)	93 (205)*5			94 (207)*6		
Pre-Chareged Quantity	Weight		kg	3.5	3.5	3.5	3.5	3.5	3.5
	CO_2 Equivalent		t	7.31	7.31	7.31	7.31	7.31	7.31
Max Added Quantity	Weight		kg	9.0	9.0	9.0	9.0	9.0	9.0
	CO_2 Equivalent		t	18.79	18.79	18.79	18.79	18.79	18.79

*1,*2 Nominal conditions

	Indoor	Outdoor	Piping Length	Level Difference	External Static Press. (Outdoor Unit)
Cooling	27°C DB / 19°C WB	35°C	7.5m (24 - 9 / 16ft.)	0m (0ft)	0 Pa
Heating	20°C DB	7°C DB / 6°C WB	7.5m (24 - 9 / 16ft.)	0m (0ft)	0 Pa

*3 10 to 52°C; incase of connecting PKFY-P15/P20/P25VBM, PFFY-P20/P25/P32VKM, PFFY-P20/P25/P32VLE(R)M indoor unit and M series indoor unit with connection kit and M series, S series, and P series type indoor unit with branch box.
*4 Up to 11 units when connecting via 2 branch boxes.
*5 94 (207), for PUMY-SP112/125/140VKM-BS
*6 95 (209), for PUMY-SP112/125/140YKM-BS
*7 When connecting 7 indoor units via branch box, connectable City Multi indoor units are 3; connecting 8 indoor units via branch box, connectable City Multi indoor units are 2.
*8 0 Pa as initial setting
*9 At least 2 indoor units must be connected when using branch box.

Type				Branch Box	
Model Name				PAC-MK54BC	PAC-MK34BC
Connectable Number of Indoor Units				Maximum 5	Maximum 3
Power Supply (from outdoor unit)				~ / N, 220 / 230 / 240 V, 50 Hz, ~ / N, 220 / 230 V, 60 Hz	
Input			kW	0.003	
Running Current			A	0.05 (Max. 6)	
Dimensions		H × W × D	mm	170 × 450 × 280	
Weight			kg	7.4	6.7
Piping Connection (Flare)	Branch [Indoor Side]	Liquid	mm	ø6.35 × 5	ø6.35 × 3
		Gas	mm	ø9.52 × 4, ø12.7 × 1	ø9.52 × 3
	Main [Outdoor Side]	Liquid	mm	ø9.52	
		Gas	mm	ø15.88	

* The piping connection size differs according to the type and capacity of outdoor/indoor units.
Match the piping connection size of branch box with outdoor/indoor unit. If the piping connection size of branch box does not match the piping connection size of outdoor/indoor unit, use optional different-diameter (deformed) joints to the branch box side.
(Connect deformed joint directly to the branch box side.)

<Branch box compatible table>

Outdoor unit \ Branch box		PAC-MK31/ 51BC(B)	PAC-MK32/ 52BC(B)	PAC-MK33/ 53BC(B)	PAC-MK34/ 54BC
Outdoor unit 1fan	PUMY-SP112/125/140V/ YKM(-BS)	✓	N/A	N/A	N/A
	PUMY-SP112/125/140V/ YKMR1(-BS)	N/A	N/A	✓	✓
	PUMY-SP112/125/140V/ YKM(-BS)R2	N/A	N/A	✓	✓
Outdoor unit 2fan	PUMY-P112/125/140V/YKM4(-BS)	✓*	✓	✓	✓
	PUMY-P112/125/140V/YKM4R1(-BS)	✓*	✓	✓	✓
	PUMY-P112/125/140VKM5(-BS)	✓*	✓	✓	✓
	PUMY-P112/125/140V/YKM4(-BS)R2	✓*	✓	✓	✓
Outdoor unit 8HP	PUMY-P200YKM2(-BS)	✓	✓	✓	✓
	PUMY-P200YKM2R1(-BS)	✓	✓	✓	✓
	PUMY-P200YKM2(-BS)R2	✓	✓	✓	✓

*ecodan is NG

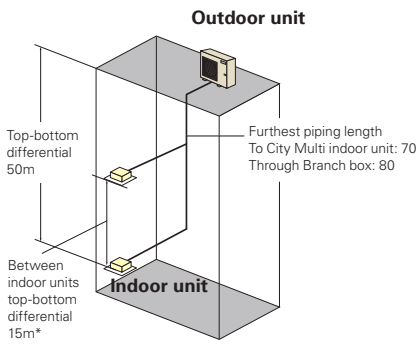

*In case of branch box connection: 12m

[SP112–140V/YKM(-BS)]

Refrigerant Piping Lengths	Maximum meters
Total length	120
Maximum allowable length	To City Multi indoor unit: 70 Through Branch box: 80

Vertical differentials between units	Maximum meters
Indoor/outdoor (outdoor higher)	50
Indoor/outdoor (outdoor lower)	30
Indoor/indoor	15*

PUMY-P SERIES

Air conditioning system supports replacement work by simplifying the installation process. Ideal for supporting renewal needs at small offices and stores, home offices, etc.

R410A

PUMY-P112/125/140VKM5(-BS)
PUMY-P112/125/140YKM(E)4(-BS)
PUMY-P200YKM2(-BS)

EXAMPLE SYSTEM

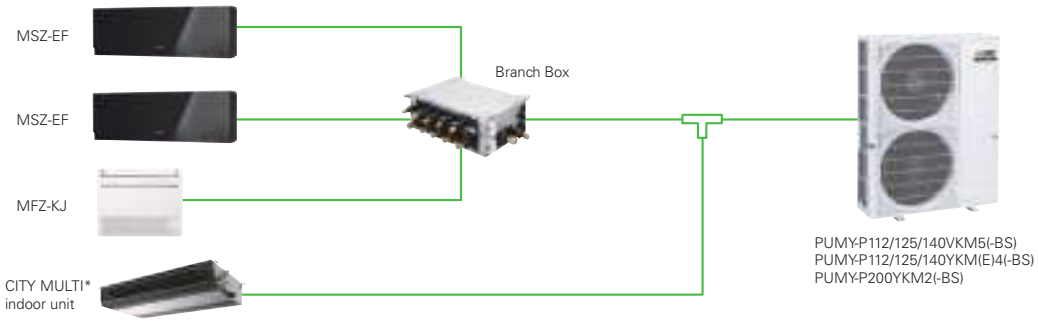

*In case of mix sytstem (CITY MULTI indoor unit with Branch box), PKFY and PFFY series are not connectable. (P112/125/140)

The two-pipe zoned system designed for Heat Pump Operation

PUMY series make use of a two-pipe refrigerant system, which allows for system changeover from cooling to heating, ensuring that a constant indoor climate is maintained in all zones. The compact outdoor unit utilizes R410A refrigerant and an INVERTER-driven compressor to use energy effectively.
With a wide range of indoor unit line-up in connection with a flexible piping system, PUMY series can be configured for all applications. Up to 12 indoor units can be connected with up to 130% connected capacity to maximize engineer's design options. This feature allows easy air conditioning in each area with convenient individual controllers.

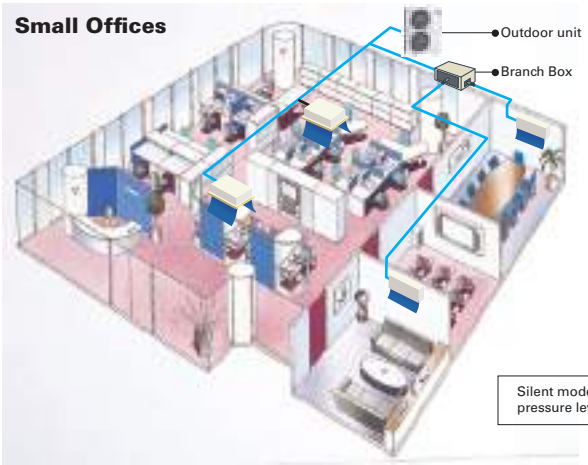

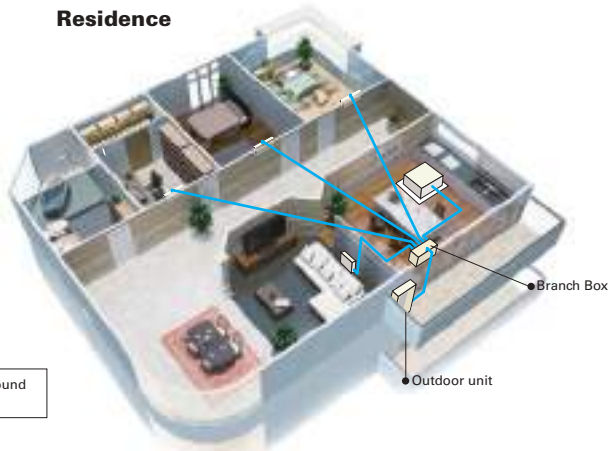

Silent mode can reduce sound pressure level by 3dB(A)

			Maximum Meters			
			Only City Multi*1 Indoor Unit	Only Branch Box Connection	Mixed System (City Multi*1 Indoor Unit + Branch Box)	
					City Multi*1 Indoor Unit	Via Branch Box
P112/125/140	Refrigerant Piping Length	Total Length	300	150	240 (2 Branch boxes) / 300 (1 Branch box)	
		Maximum Allowable Length	150 (175 equivalent)	80	85 (95 equivalent)	80
		Farthest Indoor From First Branch	30	55	30	55
	Vertical Differentials Between Units	Indoor/Outdoor (Outdoor higher)	50	50	50	
		Indoor/Outdoor(Outdoor Lower)	40*2	40	40	
		Indoor/Indoor	15*3	15*3	15*3	
P200	Refrigerant Piping Length	Total Length	150	150	150	
		Maximum Allowable Length	80 (90 equivalent)	80	80 (90 equivalent)	80
		Farthest Indoor From First Branch	30	55	30	55
	Vertical Differentials Between Units	Indoor/Outdoor (Outdoor higher)	50	50	50	
		Indoor/Outdoor (Outdoor Lower)	40	40	40	
		Indoor/Indoor	15*3	15*3	15*3	

*1 Include system with connection kit
*2 In case of including PKFY or PFFY, height between units is 30m.
*3 In case of branch box connection: 12m

30Pa external static pressure* Option (requires PAC-SJ71FM-E)

An external static pressure of 30Pa enables the outdoor unit to be installed on balconies in high-rise building or spaces near louvers.

✻PUMY-P112/125/140VKM5(-BS), PUMY-P112/125/140YKM(E)4(-BS) only.
✻Noise level will increase when using this function.

30Pa external static pressure fan motor (option)
(PAC-SJ71FM-E)

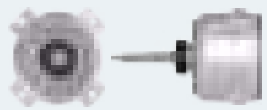

PUMY SERIES
INVERTER MULTI

Model				PUMY-P112VKM5(-BS)	PUMY-P125VKM5(-BS)	PUMY-P140VKM5(-BS)	PUMY-P112YKM4(-BS)	PUMY-P125YKM4(-BS)	PUMY-P140YKM4(-BS)	PUMY-P200YKM2(-BS)
Power Source				1-phase 220 - 230 - 240V 50Hz			3-phase 380 - 400 - 415V 50Hz			
Cooling Capacity (nominal)		*1	kW	12.5	14.0	15.5	12.5	14.0	15.5	22.4
	Power Input		kW	2.79	3.46	4.52	2.79	3.46	4.52	6.05
	Current Input		A	12.87 - 12.32 - 11.80	15.97 - 15.27 - 14.64	20.86 - 19.95 - 19.12	4.99 - 4.74 - 4.57	5.84 - 5.55 - 5.35	7.23 - 6.87 - 6.62	9.88 - 9.39 - 9.05
	EER		kW/kW	4.48	4.05	3.43	4.48	4.05	3.43	3.70
Temp. Range of Cooling	Indoor Temp.		W.B.	15.0 - 24.0°C	15.0 - 24.0°C	15.0 - 24.0°C	15.0 - 24.0°C	15.0 - 24.0°C	15.0 - 24.0°C	15.0 - 24.0°C
	Outdoor Temp.	*3	D.B.	-5.0 - 52.0°C	-5.0 - 52.0°C	-5.0 - 52.0°C	-5.0 - 52.0°C	-5.0 - 52.0°C	-5.0 - 52.0°C	-5.0 - 52.0°C
Heating Capacity (nominal)		*2	kW	14.0	16.0	18.0	14.0	16.0	18.0	25.0
	Power Input		kW	3.04	3.74	4.47	3.04	3.74	4.47	5.84
	Current Input		A	14.03 - 13.42 - 12.86	17.26 - 16.51 - 15.82	20.63 - 19.73 - 18.91	5.43 - 5.16 - 4.98	6.31 - 6.00 - 5.78	7.15 - 6.79 - 6.55	9.54 - 9.06 - 8.74
	COP		kW/kW	4.61	4.28	4.03	4.61	4.28	4.03	4.28
Temp. Range of Heating	Indoor Temp.		D.B.	15.0 - 27.0°C	15.0 - 27.0°C	15.0 - 27.0°C	15.0 - 27.0°C	15.0 - 27.0°C	15.0 - 27.0°C	15.0 - 27.0°C
	Outdoor Temp.		W.B.	-20.0 - 15.0°C	-20.0 - 15.0°C	-20.0 - 15.0°C	-20.0 - 15.0°C	-20.0 - 15.0°C	-20.0 - 15.0°C	-20.0 - 15.0°C
Indoor Unit Connectable	Total Capacity			50 to 130% of outdoor unit capacity						
	Model / Quantity		City Multi	10 - 140 / 9	10 - 140 / 10	10 - 140 / 12	10 - 140 / 9	10 - 140 / 10	10 - 140 / 12	10 - 200 / 12
			Branch Box*5	15 - 100 / 8	15 - 100 / 8	15 - 100 / 8	15 - 100 / 8	15 - 100 / 8	15 - 100 / 8	15 - 100 / 8
	Mixed System	Branch Box 1 unit	City Multi	10 - 140 / 5	10 - 140 / 5	10 - 140 / 5	10 - 140 / 5	10 - 140 / 5	10 - 140 / 5	10 - 200 / 5
			Branch Box	15 - 100 / 5	15 - 100 / 5	15 - 100 / 5	15 - 100 / 5	15 - 100 / 5	15 - 100 / 5	15 - 100 / 5
		Branch Box 2 units	City Multi	10 - 140 / 3 or 2*4	10 - 140 / 3	10 - 140 / 3	10 - 140 / 3 or 2*4	10 - 140 / 3	10 - 140 / 3	10 - 200 / 3
			Branch Box	15 - 100 / 7 or 8*4	15 - 100 / 8	15 - 100 / 8	15 - 100 / 7 or 8*4	15 - 100 / 8	15 - 100 / 8	15 - 100 / 8
Sound Pressure Level (measured in anechoic room)			dB <A>	49 / 51	50 / 52	51 / 53	49 / 51	50 / 52	51 / 53	56 / 61
Refrigerant Piping Diameter	Liquid Pipe		mm	9.52 Flare						9.52*6 Flare
	Gas Pipe		mm	15.88 Flare						19.1 Flare
Fan	Type × Quantity			Propeller Fan × 2						
	Air Flow Rate		m³/min	110						139
			L/s	1,883						2,316
			cfm	3,884						4,908
	Motor Output		kW	0.074 + 0.074						0.20 + 0.20
Compressor	Type × Quantity			Scroll hermetic compressor × 1						
	Starting Method			Inverter						
	Motor Output		kW	2.9	3.5	3.9	2.9	3.5	3.9	5.3
External Dimensions (H × W × D)			mm	1,338×1,050×330 (+40)						
Weight			kg	123			125			141

*1, *2 Nominal conditions

	Indoor	Outdoor	Piping Length	Level Difference
Cooling	27°C DB / 19°C WB	35°C	7.5m	0m
Heating	20°C DB	7°C DB / 6°C WB	7.5m	0m

*3 10 to 52°C D.B.: When connecting PKFY-P15/20/25VBM, PFFY-P20/25/32VKM and PFFY-P20/25/32VLE(R)M, PEFY-P-VMA3, M, S and P series indoor unit.
*4 When connecting 7 indoor units via branch box, connectable City Multi indoor units are 3; connecting 8 indoor units via branch box, connectable indoor units are 2.
*5 At least 2 indoor units must be connected when using branch box.
*6 Liquid pipe diameter: 12.7mm when piping length is more than 60m.

Model				PUMY-P112YKME4(-BS)	PUMY-P125YKME4(-BS)	PUMY-P140YKME4(-BS)
Power Source				3-phase 380 - 400 - 415V 50Hz		
Cooling Capacity (nominal)		*1	kW	12.5	14.0	15.5
	Power Input		kW	2.79	3.46	4.52
	Current Input		A	4.99 / 4.74 / 4.57	5.84 / 5.55 / 5.35	7.23 / 6.87 / 6.62
	EER		kW/kW	4.48	4.05	3.43
Temp. Range of Cooling	Indoor Temp.		W.B.	15 to 24°C		
	Outdoor Temp.	*3	D.B.	–5 to 52°C		
Heating Capacity (nominal)		*2	kW	14.0	16.0	18.0
	Power Input		kW	3.04	3.74	4.47
	Current Input		A	5.43 / 5.16 / 4.98	6.31 / 6.00 / 5.78	7.15 / 6.79 / 6.55
	COP		kW/kW	4.61	4.28	4.03
Temp. Range of Heating	Indoor Temp.		D.B.	15 to 27°C		
	Outdoor Temp.		W.B.	–20 to 15°C		
Indoor Unit Connectable	Total Capacity			50 to 130% of outdoor unit capacity		
	Model / Quantity		City Multi	10 - 140 / 9	10 - 140 / 10	10 - 140 / 12
			Branch Box*5	15 - 100 / 8	15 - 100 / 8	15 - 100 / 8
	Mixed System	Branch Box 1 unit	City Multi	10 - 140 / 5	10 - 140 / 5	10 - 140 / 5
			Branch Box	15 - 100 / 5	15 - 100 / 5	15 - 100 / 5
		Branch Box 2 units	City Multi	10 - 140 / 3 or 2*4	10 - 140 / 3	10 - 140 / 3
			Branch Box	15 - 100 / 7 or 8*4	15 - 100 / 8	15 - 100 / 8
Sound Pressure Level (measured in anechoic room)			dB <A>	49 / 51	50 / 52	51 / 53
Refrigerant Piping Diameter	Liquid Pipe		mm	9.52 Flare		
	Gas Pipe		mm	15.88 Flare		
Fan	Type × Quantity			Propeller Fan × 2		
	Air Flow Rate		m³/min	110		
			L/s	1,833		
			cfm	3,884		
	Motor Output		kW	0.074 + 0.074		
Compressor	Type × Quantity			Scroll hermetic compressor × 1		
	Starting Method			Inverter		
	Motor Output		kW	2.9	3.5	3.9
External Dimensions (H × W × D)			mm	1,338×1,050×330 (+40)		
Weight			kg	136		

*1, *2 Nominal conditions

	Indoor	Outdoor	Piping Length	Level Difference
Cooling	27°C DB / 19°C WB	35°C	7.5m	0m
Heating	20°C DB	7°C DB / 6°C WB	7.5m	0m

*3 10 to 52°C D.B.: When connecting PKFY-P15/20/25VBM, PFFY-P20/25/32VKM and PFFY-P20/25/32VLE(R)M, PEFY-P-VMA3, M, S and P series indoor unit.
*4 When connecting 7 indoor units via branch box, connectable City Multi indoor units are 3; connecting 8 indoor units via branch box, connectable indoor units are 2.
*5 At least 2 indoor units must be connected when using branch box.

Type				Branch Box	
Model Name				PAC-MK54BC	PAC-MK34BC
Connectable Number of Indoor Units				Maximum 5	Maximum 3
Power Supply (from outdoor unit)				~ / N, 220 / 230 / 240 V, 50 Hz, ~ / N, 220 / 230 V, 60 Hz	
Input			kW	0.003	
Running Current			A	0.05 (Max. 6)	
Dimensions		H × W × D	mm	170 × 450 × 280	
Weight			kg	7.4	6.7
Piping Connection (Flare)	Branch [Indoor Side]	Liquid	mm	ø6.35 × 5	ø6.35 × 3
		Gas	mm	ø9.52 × 4, ø12.7 × 1	ø9.52 × 3
	Main [Outdoor Side]	Liquid	mm	ø9.52	
		Gas	mm	ø15.88	

* The piping connection size differs according to the type and capacity of outdoor/indoor units.
Match the piping connection size of branch box with outdoor/indoor unit. If the piping connection size of branch box does not match the piping connection size of outdoor/indoor unit, use optional different-diameter (deformed) joints to the branch box side.
(Connect deformed joint directly to the branch box side.)

Indoor Unit Compatibility Table

■ MXZ Series

Possible combinations of outdoor units and indoor units are shown below.

Indoor Unit		Outdoor Unit	Inverter Models Heat pump type														
			MXZ-*3 2F33VF3	MXZ-*3 2F42VF3	MXZ-*3 2F53VF(H)3	MXZ-*3 2F53VFHZ	MXZ-*3 3F54VF3	MXZ-*3 3F68VF3	MXZ-*3 4F72VF3	MXZ-*3 4F80VF3	MXZ-*3 4F83VF	MXZ-*3 4F83VFHZ	MXZ-*3 5F102VF	MXZ-*3 6F122VF	MXZ-*3 2HA40VF	MXZ-*3 2HA50VF	MXZ-*3 3HA50VF
M series	Wall-Mounted	MSZ-LN18VG(W)(V)(R)(B)					●	●	●	●							
		MSZ-LN25VG(W)(V)(R)(B)					●	●	●	●							
		MSZ-LN35VG(W)(V)(R)(B)					●	●	●	●							
		MSZ-LN50VG(W)(V)(R)(B)															
		MSZ-LN18VG2(W)(V)(R)(B)	●	●	●	●	●	●	●	●	●	●	●	●			
		MSZ-LN25VG2(W)(V)(R)(B)	●	●	●	●	●	●	●	●	●	●	●	●			
		MSZ-LN35VG2(W)(V)(R)(B)		●	●	●	●	●	●	●	●	●	●	●			
		MSZ-LN50VG2(W)(V)(R)(B)					●	●	●	●	●	●	●	●			
		MSZ-FT25VG															
		MSZ-FT35VG															
		MSZ-FT50VG															
		MSZ-AP15VG	●	●	●	●	●	●	●	●	●	●	●	●			
		MSZ-AP20VG	●	●	●	●	●	●	●	●	●	●	●	●			
		MSZ-AP25VG(K)	●	●	●	●	●	●	●	●	●	●	●	●			
		MSZ-AP35VG(K)		●	●	●	●	●	●	●	●	●	●	●			
		MSZ-AP42VG(K)			●	●	●	●	●	●	●	●	●	●			
		MSZ-AP50VG(K)			●	●	●	●	●	●	●	●	●	●			
		MSZ-AP60VG(K)						●	●	●	●	●	●	●			
		MSZ-AP71VG(K)									●	●	●	●			
		MSZ-EF18VG(K)(W)(B)(S)	●	●	●	●	●	●	●	●	●	●	●	●			
		MSZ-EF22VG(K)(W)(B)(S)	●	●	●	●	●	●	●	●	●	●	●	●			
		MSZ-EF25VG(K)(W)(B)(S)	●	●	●	●	●	●	●	●	●	●	●	●			
		MSZ-EF35VG(K)(W)(B)(S)		●	●	●	●	●	●	●	●	●	●	●			
		MSZ-EF42VG(K)(W)(B)(S)			●	●	●	●	●	●	●	●	●	●			
		MSZ-EF50VG(K)(W)(B)(S)			●	●	●	●	●	●	●	●	●	●			
		MSZ-BT20VG(K)	●	●	●	●	●	●	●	●	●	●	●	●			
		MSZ-BT25VG(K)	●	●	●	●	●	●	●	●	●	●	●	●			
		MSZ-BT35VG(K)		●	●	●	●	●	●	●	●	●	●	●			
		MSZ-BT50VG(K)															
		MSZ-HR25VF													●	●	●
		MSZ-HR35VF													●	●	●
		MSZ-HR42VF														●	●
		MSZ-HR50VF															●
		MSZ-HR60VF															
		MSZ-HR71VF															
	Floor-Standing	MFZ-KT25VG	●	●	●	●	●	●	●	●	●	●	●	●			
		MFZ-KT35VG		●	●	●	●	●	●	●	●	●	●	●			
		MFZ-KT50VG					●	●	●	●	●	●	●	●			
	1-way Cassette	MLZ-KP25VF	●	●	●	●	●	●	●	●	●	●	●	●			
		MLZ-KP35VF		●	●	●	●	●	●	●	●	●	●	●			
		MLZ-KP50VF					●	●	●	●	●	●	●	●			
S series	2×2 Cassette	SLZ-M15FA	●	●	●	●	●	●	●	●	●	●	●	●			
		SLZ-M25FA	●	●	●	●	●	●	●	●	●	●	●	●			
		SLZ-M35FA		●	●	●	●	●	●	●	●	●	●	●			
		SLZ-M50FA					●	●	●	●	●	●	●	●			
	Ceiling-Concealed	SEZ-M25DA*2	●	●	●	●	●	●	●	●	●	●	●	●			
		SEZ-M25DAL*2	●	●	●	●	●	●	●	●	●	●	●	●			
		SEZ-M35DA		●	●	●	●	●	●	●	●	●	●	●			
		SEZ-M35DAL		●	●	●	●	●	●	●	●	●	●	●			
		SEZ-M50DA					●	●	●	●	●	●	●	●			
		SEZ-M50DAL					●	●	●	●	●	●	●	●			
		SEZ-M60DA						●	●	●	●	●	●	●			
		SEZ-M60DAL						●	●	●	●	●	●	●			
		SEZ-M71DA									●	●	●	●			
		SEZ-M71DAL									●	●	●	●			
P series	Ceiling-Suspended	PCA-M50KA					●	●	●	●							
		PCA-M60KA						●	●	●							
		PCA-M71KA															
	Ceiling-Concealed	PEAD-M50JA					●*1	●*1	●*1	●							
		PEAD-M50JAL					●*1	●*1	●*1	●							
		PEAD-M60JA															
		PEAD-M60JAL															
		PEAD-M71JA															
		PEAD-M71JAL															

*1 Maximum total current of indoor units: 3A or less.
*2 SEZ-M25 cannot be connected with MXZ-2F/3F/4F when total capacity of connected indoor units is equivalent to outdoor capacity (capacity ratio is 1).
*3 MXZ outdoor units are not designed to operate with a single indoor unit with one-to-one piping work. Please install at least two indoor units.

■ MXZ Series R410A

Possible combinations of outdoor units and indoor units are shown below.

Indoor Unit		Outdoor Unit	Inverter Models Heat pump type												
			MXZ-*3 2D33VA	MXZ-*3 2D42VA2	MXZ-*3 2D53VA(H)2	MXZ-*3 2E53VAHZ	MXZ-*3 3E54VA	MXZ-*3 3E68VA	MXZ-*3 4E72VA	MXZ-*3 4E83VA	MXZ-*3 4E83VAHZ	MXZ-*3 5E102VA	MXZ-*3 6D122VA2	MXZ-*3 2DM40VA	MXZ-*3 3DM50VA
M series	Wall-Mounted	MSZ-LN18VG(W)(V)(R)(B)													
		MSZ-LN25VG(W)(V)(R)(B)	●	●	●	●	●	●	●	●	●	●	●		
		MSZ-LN35VG(W)(V)(R)(B)		●	●	●	●	●	●	●	●	●	●		
		MSZ-LN50VG(W)(V)(R)(B)													
		MSZ-AP15VG*7	●	●	●	●	●	●	●	●	●	●	●		
		MSZ-AP20VG*7	●	●	●	●	●	●	●	●	●	●	●		
		MSZ-AP25VG*7	●	●	●	●	●	●	●	●	●	●	●		
		MSZ-AP35VG*7		●	●	●	●	●	●	●	●	●	●		
		MSZ-AP42VG*7			●	●	●	●	●	●	●	●	●		
		MSZ-AP50VG*7			●	●	●	●	●	●	●	●	●		
		MSZ-EF18VG(W)(B)(S)	●	●	●	●	●	●	●	●	●	●	●		
		MSZ-EF22VG(W)(B)(S)	●	●	●	●	●	●	●	●	●	●	●		
		MSZ-EF25VG(W)(B)(S)	●	●	●	●	●	●	●	●	●	●	●		
		MSZ-EF35VG(W)(B)(S)		●	●	●	●	●	●	●	●	●	●		
		MSZ-EF42VG(W)(B)(S)			●	●	●	●	●	●	●	●	●		
		MSZ-EF50VG(W)(B)(S)			●	●	●	●	●	●	●	●	●		
		MSZ-FH25VE2	●	●	●	●	●	●	●	●	●	●	●		
		MSZ-FH35VE2		●	●	●	●	●	●	●	●	●	●		
		MSZ-FH50VE2					●	●	●	●	●	●	●		
		MSZ-SF15VA	●	●	●	●	●	●	●	●	●	●	●		
		MSZ-SF20VA	●	●	●	●	●	●	●	●	●	●	●		
		MSZ-SF25VE3	●	●	●	●	●	●	●	●	●	●	●		
		MSZ-SF35VE3		●	●	●	●	●	●	●	●	●	●		
		MSZ-SF42VE3			●	●	●	●	●	●	●	●	●		
		MSZ-SF50VE3			●	●	●	●	●	●	●	●	●		
		MSZ-GF60VE2						●	●	●	●	●	●		
		MSZ-GF71VE2								●	●	●	●		
		MSZ-DM25VA												●	●
		MSZ-DM35VA												●	●
		MSZ-HJ25VA												●	●
		MSZ-HJ35VA												●	●
		MSZ-HJ50VA													●
	Floor-Standing	MFZ-KJ25VE2	●*4*5	●*4	●*4	●	●*4	●*4	●	●	●	●	●		
		MFZ-KJ35VE2		●*4	●*4	●	●*4	●*4	●	●	●	●	●		
		MFZ-KJ50VE2					●*4	●*4	●	●	●	●	●		
	1-way Cassette	MLZ-KP25VF	●	●	●	●	●	●	●	●	●	●	●		
		MLZ-KP35VF		●	●	●	●	●	●	●	●	●	●		
		MLZ-KP50VF					●	●	●	●	●	●	●		
S series	2×2 Cassette	SLZ-M15FA													
		SLZ-M25FA	●	●	●	●	●	●	●	●	●	●	●		
		SLZ-M35FA		●	●	●	●	●	●	●	●	●	●		
		SLZ-M50FA					●	●	●	●	●	●	●		
	Ceiling-Concealed	SEZ-M25DA*2	●	●	●	●	●	●	●	●	●	●	●		
		SEZ-M25DAL*2	●	●	●	●	●	●	●	●	●	●	●		
		SEZ-M35DA		●	●	●	●	●	●	●	●	●	●		
		SEZ-M35DAL		●	●	●	●	●	●	●	●	●	●		
		SEZ-M50DA					●	●	●	●	●	●	●		
		SEZ-M50DAL					●	●	●	●	●	●	●		
		SEZ-M60DA						●	●	●	●	●	●		
		SEZ-M60DAL						●	●	●	●	●	●		
		SEZ-M71DA								●	●	●	●		
		SEZ-M71DAL								●	●	●	●		
P series	4-way Cassette	PLA-M50EA					●	●	●	●	●	●	●		
		PLA-M60EA						●	●	●	●*6	●	●		
		PLA-M71EA								●	●*6	●	●		
	Ceiling-Suspended	PCA-M50KA					●	●	●	●	●*6	●	●		
		PCA-M60KA						●	●	●	●*6	●	●		
		PCA-M71KA								●	●*6	●	●		
	Ceiling-Concealed	PEAD-M50JA					●*1	●*1	●*1	●*1	●*1*6	●*1	●*1		
		PEAD-M50JAL					●*1	●*1	●*1	●*1	●*1*6	●*1	●*1		
		PEAD-M60JA								●*1	●*1*6	●*1	●*1		
		PEAD-M60JAL								●*1	●*1*6	●*1	●*1		
		PEAD-M71JA								●*1	●*1*6	●*1	●*1		
		PEAD-M71JAL								●*1	●*1*6	●*1	●*1		

*1 Maximum total current of indoor units: 3A or less.
*2 SEZ-KD25 cannot be connected with MXZ-2D(E)/3E/4E/5E when total capacity of connected indoor units is equivalent to outdoor capacity (capacity ratio is 1).
*3 MXZ outdoor units are not designed to operate with a single indoor unit with one-to-one piping work. Please install at least two indoor units.
*4 When connecting the MFZ-KJ Series indoor unit, additional refrigerant is required. For details, please refer to page 104.
*5 Regarding MXZ-2D33, the second unit should be a different type in the case of selecting one MFZ-KJ.
*6 P series cannot be connected with MXZ-4E83VAHZ when ampere limit adjustment function is operated.
*7 Connectable outdoor unit are MXZ-2D33VA-E4, MXZ-2D42VA2-E4, MXZ-2D53VA2-E4, MXZ-2E53VAHZ-E2, MXZ-3E54VA-E2, MXZ-3E68VA-E2, MXZ-4E72VA-E2, MXZ-4E83VA-E4, MXZ-4E83VAHZ-E3, MXZ-5E102VA-E4.

■ PUMY-SP Series

Branch Box Connection Compatibility Table

Series	Type	Model Name	Capacity										
			15	18	20	22	25	35	42	50	60	71	100
M series	Wall-Mounted	MSZ-LN•VG2					●	●		●			
		MSZ-AP•VG(K)	●*1		●*1		●*1	●*1	●*1	●*1			
		MSZ-FH•VE2					●	●		●			
		MSZ-EF•VG(K)		●*1		●*1	●*1	●*1	●*1	●*1			
		MSZ-SF•VA	●		●								
		MSZ-SF•VE3					●	●	●	●			
		MSZ-GF•VE2									●	●	
	Floor-Standing	MFZ-KT•VG					●*1	●*1		●*1			
	1-way Cassette	MLZ-KP•VF					●*1	●*1		●*1			
S series	Ceiling-Concealed	SEZ-M•DA(L)					●*1	●*1		●*1	●*1	●*1	
	2×2 Cassette	SLZ-M•FA	●*1				●*1	●*1		●*1			
P series	Ceiling-Suspended	PCA-M•KA						●		●	●	●	●
	4-way Cassette	PLA-M•EA						●*1		●*1	●*1	●*1	●*1
	Ceiling-Concealed	PEAD-M•JA(L)								●*1	●*1	●*1	●*1

*1 Connectable outdoor units are PUMY-SP112/125/140V(Y)KMR1(R2)(-BS).TH only.

LEV Kit Connection Compatibility Table

Series	I/U Type	Model Name	Capacity									
			15	18	20	22	25	35	42	50	60	71
M series	Wall-Mounted	MSZ-LN•VG2					●*1	●*1		●*1		
		MSZ-AP•VG(K)	●*1		●*1		●*1	●*1	●*1	●*1		
		MSZ-FH•VE2					●	●		●		
		MSZ-EF•VG(K)		●*1		●*1	●*1	●*1	●*1	●*1		
		MSZ-SF•VA	●		●							
		MSZ-SF•VE3					●	●	●	●		
	Floor-Standing	MFZ-KT•VG					●*1	●*1		●*1		

*1 Connectable outdoor units are PUMY-SP112/125/140V(Y)KMR1(R2)(-BS).TH only.

CITY MULTI Indoor Unit Compatibility Table for PUMY-SP112/125/140

Series	Type	Model Name	Capacity													
			P10	P15	P20	P25	P32	P40	P50	P63	P71	P80	P100	P125	P140	P200
CITY MULTI series	1-way cassette	PMFY-P•VBM-E			●	●	●	●								
	2-way cassette	PLFY-P•VLMD-E			●	●	●	●	●	●		●	●	●		
	4-way cassette	PLFY-M•VEM-E			●	●	●	●	●	●		●	●	●		
		PLFY-EP•VEM-E *3							●	●		●				
		PLFY-P•VFM-E		●	●	●	●	●	●							
	Ceiling-concealed	PEFY-P•VMR-E-L/R			●	●	●									
		PEFY-P•VMS1(L)-E		●	●	●	●	●	●	●						
		PEFY-M•VMA(L)-A *2			●	●	●	●	●	●	●	●	●	●	●	
		PEFY-P•VMA3-E*1				●	●	●								
		PEFY-P•VMHS-E						●	●	●	●	●	●	●	●	
		PEFY-P•VMHS-E-F *4												●		
	Ceiling-suspended	PCFY-P•VKM-E						●		●			●	●		
	Wall-mounted	PKFY-P•VLM-E	●	●	●	●	●	●	●							
		PKFY-P•VKM-E								●			●			
	Floor-standing	PFFY-P•VKM-E2			●	●	●	●								
		PFFY-P•VLEM-E			●	●	●	●	●	●						
		PFFY-P•VCM-E			●	●	●	●	●	●						
	Lossnay		GUF-50/100RD(H)4													

*1 Authorized connectable indoor units are as follows;
PUMY-SP112: PEFY-P25×2+P32×2,PUMY-SP125: PEFY-P25×1+P32×3, PUMY-SP140: PEFY-P32×2+P40×2
*2 Do not connect Lossnay remote controller(s). (PZ-61DR-E, PZ-60DR-E, PZ-52SF-E, PZ-43SMF-E)
*3 PLFY-EP can not connect more than 3 units
*4 Connectable outdoor units are PUMY-SP112/125/140V(Y)KMR2(-BS). TH only.

■ PUMY-P Series

Branch Box Connection Compatibility Table

Series	Type	Model Name	Capacity										
			15	18	20	22	25	35	42	50	60	71	100
M series	Wall-Mounted	MSZ-LN•VG2					●	●		●			
		MSZ-AP•VG(K)	●*1		●*1		●	●	●	●			
		MSZ-FH•VE2					●	●		●			
		MSZ-EF•VG(K)		●		●	●	●	●	●			
		MSZ-SF•VA	●		●								
		MSZ-SF•VE3					●	●	●	●			
		MSZ-GF•VE2									●	●	
	Floor-Standing	MFZ-KT•VG					●	●		●			
	1-way Cassette	MLZ-KP•VF					●	●		●			
S series	Ceiling-Concealed	SEZ-M•DA(L)					●	●		●	●	●	
	2×2 Cassette	SLZ-M•FA	●				●	●		●			
P series	Ceiling-Suspended	PCA-M•KA						●		●	●	●	●
	4-way Cassette	PLA-M•EA						●		●	●	●	●
	Ceiling-Concealed	PEAD-M•JA(L)								●	●	●	●

*1 MSZ-AP15/20VGK are not connectable.

LEV Kit Connection Compatibility Table

Series	I/U Type	Model Name	Capacity									
			15	18	20	22	25	35	42	50	60	71
M series	Wall-Mounted	MSZ-LN•VG2					●	●		●		
		MSZ-AP•VG(K)	●*1		●*1		●	●	●	●		
		MSZ-FH•VE2					●	●		●		
		MSZ-EF•VG(K)		●		●	●	●	●	●		
		MSZ-SF•VA	●		●							
		MSZ-SF•VE3					●	●	●	●		
	Floor-Standing	MFZ-KT•VG					●	●		●		

*1 MSZ-AP15/20VGK are not connectable.

CITY MULTI Indoor Unit Compatibility Table for PUMY-P112/125/140

Series	Type	Model Name	Capacity													
			P10	P15	P20	P25	P32	P40	P50	P63	P71	P80	P100	P125	P140	P200
CITY MULTI series	1-way cassette	PMFY-P•VBM-E			●	●	●	●								
	2-way cassette	PLFY-P•VLMD-E			●	●	●	●	●	●		●	●	●		
	4-way cassette	PLFY-M•VEM-E			●	●	●	●	●	●		●	●	●		
		PLFY-EP•VEM-E *4							●	●		●				
		PLFY-P•VFM-E		●	●	●	●	●	●							
	Ceiling-concealed	PEFY-P•VMR-E-L/R			●	●	●									
		PEFY-P•VMS1(L)-E		●	●	●	●	●	●	●						
		PEFY-M•VMA(L)-A			●	●	●	●	●	●	●	●	●	●	●	
		PEFY-P•VMA3-E *1				●	●	●								
		PEFY-P•VMHS-E						●	●	●	●	●	●	●	●	
		PEFY-P•VMHS-E-F												●		
	Ceiling-suspended	PCFY-P•VKM-E						●		●			●	●		
	Wall-mounted	PKFY-P•VLM-E	●	●	●	●	●	●	●							
		PKFY-P•VKM-E								●			●			
	Floor-standing	PFFY-P•VKM-E2			●	●	●	●								
		PFFY-P•VLEM-E			●	●	●	●	●	●						
		PFFY-P•VCM-E			●	●	●	●	●	●						
	ATW	PWFY-P•VM-E1 *2											●			
	Lossnay		GUF-50/100RD(H)4													

CITY MULTI Indoor Unit Compatibility Table for PUMY-P200

Series	Type 1-way cassette	Model Name	Capacity													
			P10	P15	P20	P25	P32	P40	P50	P63	P71	P80	P100	P125	P140	P200
CITY MULTI series	2-way cassette	PMFY-P•VBM-E			●	●	●	●								
	4-way cassette	PLFY-P•VLMD-E			●	●	●	●	●	●		●	●	●		
		PLFY-M•VEM-E			●	●	●	●	●	●		●	●	●		
		PLFY-EP•VEM-E *4								●						
	Ceiling-concealed	PLFY-P•VFM-E		●	●	●	●	●	●							
		PEFY-P•VMR-E-L/R			●	●	●									
		PEFY-P•VMS1(L)-E		●	●	●	●	●	●	●						
		PEFY-M•VMA(L)-A			●	●	●	●	●	●	●	●	●	●	●	
		PEFY-P•VMA3-E *1						●		●						
		PEFY-P•VMHS-E						●	●	●	●	●	●	●	●	●
		PEFY-P•VMHS-E-F														●
	Ceiling-suspended	PCFY-P•VKM-E						●		●			●	●		
	Wall-mounted	PKFY-P•VLM-E	●	●	●	●	●	●	●							
		PKFY-P•VKM-E								●			●			
	Floor-standing	PFFY-P•VKM-E2			●	●	●	●								
		PFFY-P•VLEM-E			●	●	●	●	●	●						
		PFFY-P•VCM-E			●	●	●	●	●	●						
	Lossnay		GUF-50/100RD(H)4													

*1 Authorized connectable indoor units are as follows;
PUMY-P112:PEFY-P25×2+P32×2, PUMY-P125:PEFY-P32×4, PUMY-P140:PEFY-P32×3+P40×1, PUMY-P200YKM2:PEFY-P40×2+P63×2
*2 Note that connection is not allowed inside EU countries.
PWFY can not connect to PUMY-P200YKM2.
*3 Do not connect Lossnay remote controller(s). (PZ-61DR-E, PZ-60DR-E, PZ-52SF-E, PZ-43SMF-E)
*4 PUMY-Pl12/125/140: PLFY-EP can not connect more than 3 units
PUMY-P200: Authorized connectable indoor units are only as follows; PLFY-EP63VEM-E×3.

POWERFUL HEATING

SERIES

SELECTION

Choose the series that best matches the building layout.

MSZ-LN VGHZ, MSZ-FH/MFZ-KJ VEHZ SERIES

The line-up includes outdoor models 25–50

Outdoor Unit

R32 R410A

MUZ-LN25/35VGHZ2
MUZ-FT25VGHZ
MUFZ-KJ25/35VEHZ

R32

MUZ-FT35/50VGHZ

R32 R410A

MUZ-LN50VGHZ2
MUFZ-KJ50VEHZ

Indoor Unit

Wall-mounted

R32 R410A *

MSZ-LN25/35/50VG2
(W)(V)(R)(B)

R32

MSZ-FT25/35/50VG

Floor-standing

R410A

MFZ-KJ25/35/50VE2

* R410A is for PUMY connection.

ZUBADAN SERIES

The line-up includes outdoor unit models 112-140 class and three types of indoor units.

Outdoor Unit R410A

PUHZ-SHW112VHA
PUHZ-SHW112/140YHA

Indoor Unit

4-way cassette

R32 R410A

PLA Series

Ceiling-concealed

R32 R410A

PEAD Series

Wall-mounted

R32 R410A

PKA Series

MXZ-VAHZ/VFHZ SERIES

Outdoor Unit

R32

MXZ-2F53VFHZ

R32

MXZ-4F83VFHZ

R410A

MXZ-2E53VAHZ

R410A

MXZ-4E83VAHZ

LN VGHZ SERIES

Single / MXZ, PUMY PUMY

Unlike conventional air conditioning systems, the LN Series don't lose heating capacity when it's cold outside. Original technologies ensure excellent heating performance under extremely low outdoor temperatures and an impressive guaranteed operating range.

MSZ-LN25/35/50VG2(W)(V)(R)(B)

Unparalleled Heating Performance

LN Series outdoor units are equipped with a high-output compressor that provides enhanced heating performance under low outdoor temperatures. The heating operation range is extended down to -25°C.

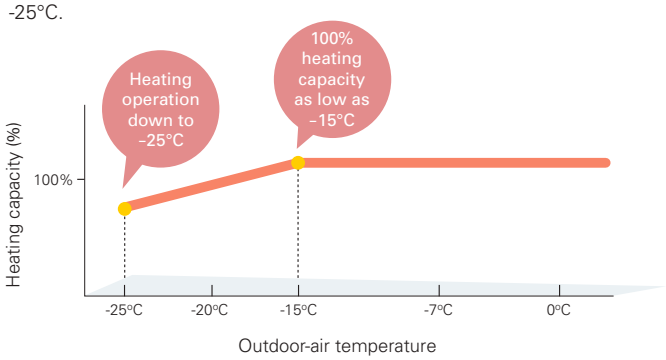

Operating Range

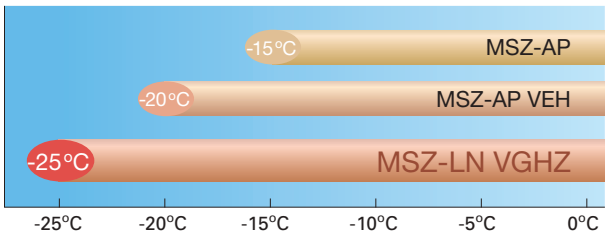

Declared Capacity (at reference design temperature)

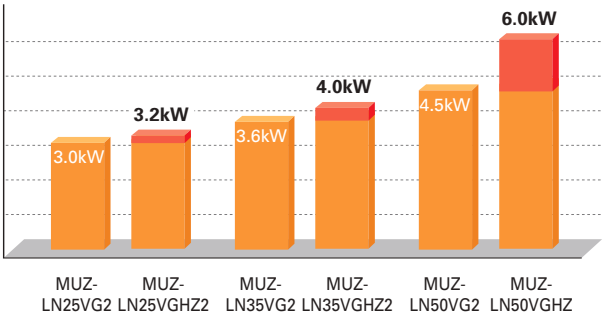

High Energy Efficiency – Energy Rank of A+ or higher for All Models

DC Inverter

With indoor units that combine functionality, design and capacity and outdoor units equipped with a high-efficiency compressor, the MUZ-LN VGHZ simultaneously achieves high heating capacity and energy-saving performance.

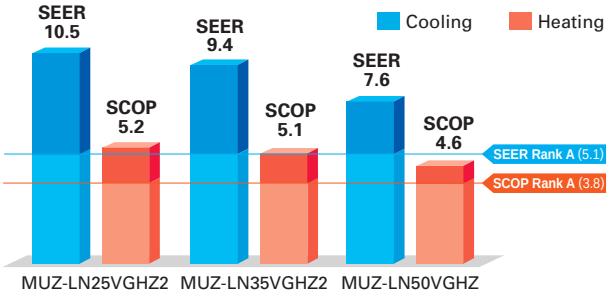

Freeze-prevention Heater Equipped as Standard

The Freeze-prevention heater restricts lowered capacity and operation shutdowns caused by the drain water freezing. This supports stable operation in low-temperature environments.

Operation Guaranteed at Outside Temperature of –25°C

Without Freeze-prevention heater

With Freeze-prevention heater

Compact, Powerful Compressor

A special manufacturing technology, "Heat Caulking Fixing Method," has been introduced to reduce compressor size while maintaining a high compressor output. This technology enables the installation of a powerful compressor in compact MUZ outdoor units. As a result, excellent heating performance is achieved when operating in cold outdoor environments.

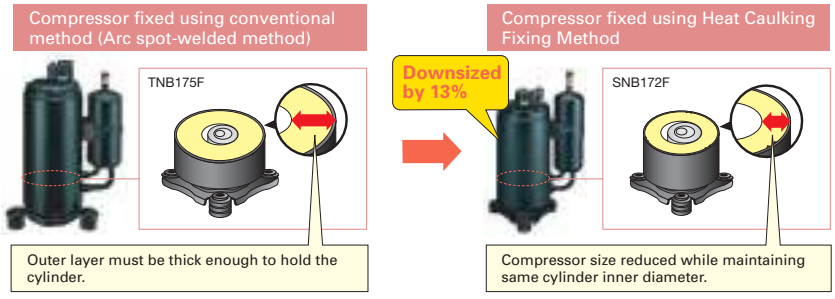

MSZ-LN VGHZ SERIES

Indoor Unit / Remote Controller

GOOD DESIGN AWARD 2016 BEST 100

<Pearl White>

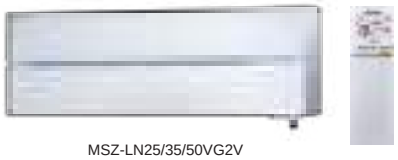

MSZ-LN25/35/50VG2V

<Ruby Red>

MSZ-LN25/35/50VG2R

<Natural White>

MSZ-LN25/35/50VG2W

<Onyx Black>

MSZ-LN25/35/50VG2B

Outdoor Unit

MUZ-LN25/35VGHZ2

MUZ-LN50VGHZ

Type				Inverter Heat Pump		
Indoor Unit				MSZ-LN25VG2(W)(V)(R)(B)	MSZ-LN35VG2(W)(V)(R)(B)	MSZ-LN50VG2(W)(V)(R)(B)
Outdoor Unit				MUZ-LN25VGHZ2	MUZ-LN35VGHZ2	MUZ-LN50VGHZ
Refrigerant				R32 (*1)		
Power Supply	Source			Outdoor Power supply		
	Outdoor (V/Phase/Hz)			230/Single/50		
Cooling	Design Load		kW	2.5	3.5	5.0
	Annual Electricity Consumption (*2)		kWh/a	83	130	230
	SEER (*4)			10.5	9.4	7.6
		Energy Efficiency Class		A+++	A+++	A++
	Capacity	Rated	kW	2.5	3.5	5.0
		Min - Max	kW	0.8 - 3.5	0.8 - 4.0	1.4 - 5.8
	Total Input	Rated	kW	0.485	0.820	1.380
Heating (Average Season)(*5)	Design Load		kW	3.2 (–10°C)	4.0 (–10°C)	6.0 (–10°C)
	Declared Capacity	at reference design temperature	kW	3.2 (–10°C)	4.0 (–10°C)	6.0 (–10°C)
		at bivalent temperature	kW	3.2 (–10°C)	4.0 (–10°C)	6.0 (–10°C)
		at operation limit temperature	kW	2.3 (–25°C)	3.1 (–25°C)	4.7 (–25°C)
	Back Up Heating Capacity		kW	0.0 (–10°C)	0.0 (–10°C)	0.0 (–10°C)
	Annual Electricity Consumption (*2)		kWh/a	861	1098	1826
	SCOP (*4)			5.2	5.1	4.6
		Energy Efficiency Class		A+++	A+++	A++
	Capacity	Rated	kW	3.2	4.0	6.0
		Min - Max	kW	0.8 - 6.3	0.9 - 6.6	1.8 - 8.7
	Total Input	Rated	kW	0.600	0.820	1.480
Operating Current (max)			A	9.9	10.5	15.2
Indoor Unit	Input	Rated	kW	0.027	0.027	0.034
	Operating Current (max)		A	0.3	0.3	0.4
	Dimensions	H × W × D	mm	307 - 890 - 233	307 - 890 - 233	307 - 890 - 233
	Weight		kg	15.5	15.5	15.5
	Air Volume (SLo-Lo-Mid-Hi-SHi (*3) (Dry/Wet))	Cooling	m^3/min	4.3 - 5.8 - 7.1 - 8.8 - 11.9	4.3 - 5.8 - 7.1 - 8.8 - 12.8	5.7 - 7.6 - 8.9 - 10.6 - 13.9
		Heating	m^3/min	4.0 - 5.7 - 7.1 - 8.5 - 14.4	4.3 - 5.7 - 7.1 - 8.5 - 13.7	5.4 - 6.4 - 8.5 - 10.7 - 15.7
	Sound Level (SPL) (SLo-Lo-Mid-Hi-SHi (*3))	Cooling	dB(A)	19 - 23 - 29 - 36 - 42	19 - 24 - 29 - 36 - 43	27 - 31 - 35 - 39 - 46
		Heating	dB(A)	19 - 24 - 29 - 36 - 45	19 - 24 - 29 - 36 - 45	25 - 29 - 34 - 39 - 47
	Sound Level (PWL)		dB(A)	58	58	60
Outdoor Unit	Dimensions	H × W × D	mm	550 - 800 - 285	550 - 800 - 285	880 - 840 - 330
	Weight		kg	35	36	55
	Air Volume	Cooling	m^3/min	31.4	33.8	48.8
		Heating	m^3/min	27.4	27.4	51.3
	Sound Level (SPL)	Cooling	dB(A)	46	49	51
		Heating	dB(A)	49	50	54
	Sound Level (PWL)	Cooling	dB(A)	60	61	64
	Operating Current (max)		A	9.6	10.2	14.8
	Breaker Size		A	10	12	16
Ext. Piping	Diameter	Liquid / Gas	mm	6.35/9.52	6.35/9.52	6.35/9.52
	Max. Length	Out-In	m	20	20	30
	Max. Height	Out-In	m	12	12	15
Guaranteed Operating Range [Outdoor]		Cooling	°C	–10 ~ +46	–10 ~ +46	–10 ~ +46
		Heating	°C	–25 ~ +24	–25 ~ +24	–25 ~ +24

(*1) Refrigerant leakage contributes to climate change. Refrigerant with lower global warming potential (GWP) would contribute less to global warming than a refrigerant with higher GWP, if leaked to the atmosphere. This appliance contains a refrigerant fluid with a GWP equal to 550. This means that if 1 kg of this refrigerant fluid would be leaked to the atmosphere, the impact on global warming would be 550 times higher than 1 kg of CO_2, over a period of 100 years. Never try to interfere with the refrigerant circuit yourself or disassemble the product yourself and always ask a professional.
The GWP of R32 is 675 in the IPCC 4th Assessment Report.
(*2) Energy consumption based on standard test results. Actual energy consumption will depend on how the appliance is used and where it is located.
(*3) SHi: Super High
(*4) SEER, SCOP and other related description are based on COMMISSION DELEGATED REGULATION (EU) No.626/2011. The temperature conditions for calculating SCOP are based on "Average Season".
(*5) Please see page 51-52 for heating (warmer season/colder season) specifications.

FT VGHZ SERIES

Single / Multi

Unlike conventional air conditioning systems, the FT Series don't lose heating capacity when it's cold outside. Original technologies ensure excellent heating performance under extremely low outdoor temperatures and an impressive guaranteed operating range. Furthermore, the smaller and stylish indoor unit does not give you the limitation of installation location.

MSZ-FT25/35/50VG(K)

Compact Design

The FT series features its compact design with 280mm height and 229mm depth, which is suitable for the installation above the door.

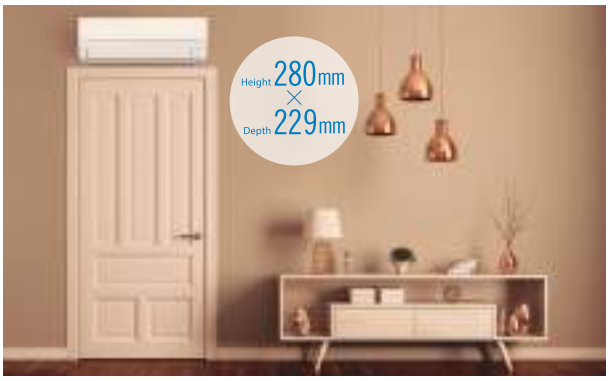

Silver-ionized Air Purifier Filter

The high performance filter is attached as standard. Captures the bacteria, pollen and other allergens in the air and neutralises them.

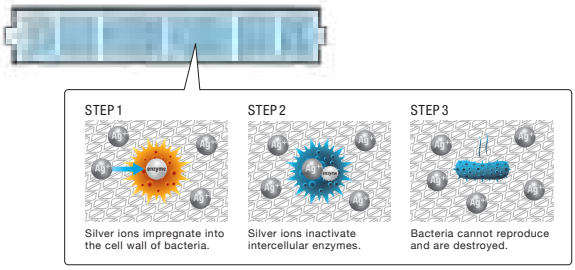

Remote Controller with Backlight

The remote controller screen is equipped with an LED backlight. The luminous screen allows you to check the setting easily even in the dark.

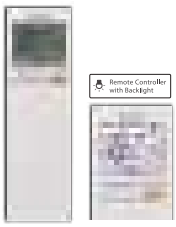

Circulator Mode

After reaching the target temperature, heating mode will automatically switch to Circulator mode, which makes the unit go into "fan-only" state and mixes warm air in the room.

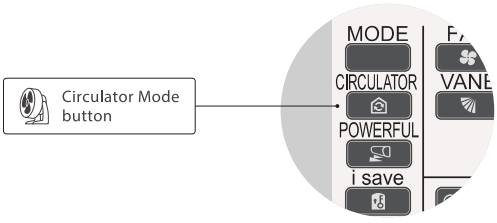

Built-in Wi-Fi

(MSZ-FT25/35/50VGK)

Mitsubishi Electric Wi-Fi Control gives you the freedom to tailor your heating and cooling needs through computers, tablets, or smartphones from anywhere.

Hyper Heating

Mitsubishi Electric's powerful compressor and highly cold-resistant parts enable the heat pump to provide 100% or more heating capacity even at –15°C, and also the heating operation is guaranteed down to –25°C.

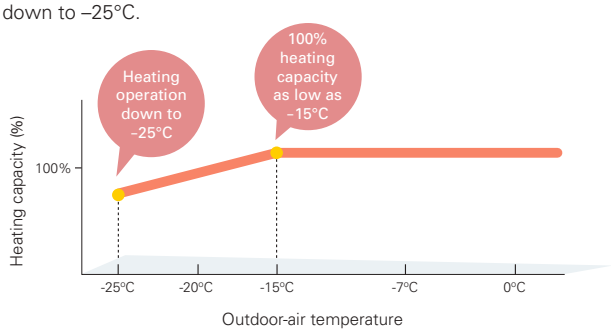

High Energy Efficiency – Energy Rank of A+ or higher for All Models

DC Inverter

With indoor units that combine functionality, design and capacity and outdoor units equipped with a high-efficiency compressor, the MUZ-FT VGHZ simultaneously achieves high heating capacity and energy-saving performance.

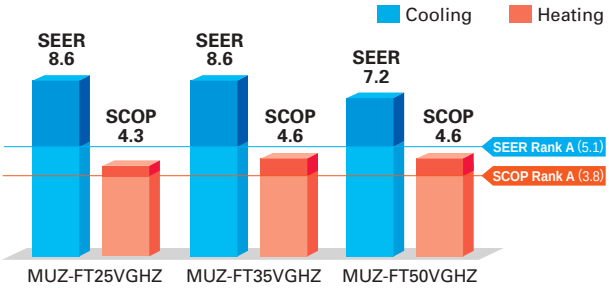

(MSZ-FT25/35/50VG(K)-SC Scandinavian Model)

Image is for illustration purposes.

MSZ-FT SERIES

DC Inverter | Joint Lap | DC Fan Motor | PAM | Grooved Piping | 25-35 SEER A+++ | 25-35 SCOP A++

Indoor Unit

MSZ-FT25/35/50VG(K)

Outdoor Unit

MUZ-FT25VGHZ

MUZ-FT35/50VGHZ

Remote Controller

Econo Cool (-E / -ET Only) | Silver-ion | Air Purifying | SWING | SWING | AUTO | Circulator Mode | Weekly Timer | i save | ACO | Auto Restart | Low Temp Cooling | Optional | Group Control (Optional) | M-NET connection (Optional)

Wi-Fi Interface (VGK Only) | 10°C | Indoor | Night | Back Light Remote | Cleaning-free pipe system | Flare connection | Self Diagnosis | Failure Recall

Type				Inverter Heat Pump		
Indoor Unit				MSZ-FT25VG(K)	MSZ-FT35VG(K)	MSZ-FT50VG(K)
Outdoor Unit				MUZ-FT25VGHZ	MUZ-FT35VGHZ	MUZ-FT50VGHZ
Refrigerant				R32 (*1)		
Power Supply	Source			Outdoor power supply		
	Outdoor (V/Phase/Hz)			230 / Single / 50		
Cooling	Design Load		kW	2.5	3.5	5.0
	Annual Electricity Consumption (*2)		kWh/a	101	142	243
	SEER (*4)			8.6	8.6	7.2
		Energy Efficiency Class		A+++	A+++	A++
	Capacity	Rated	kW	2.5	3.5	5.0
		Min - Max	kW	0.8 - 3.5	0.8 - 4.0	0.8 - 5.2
	Total Input	Rated	kW	0.580	0.910	1.630
Heating (Average Season)(*5)	Design Load		kW	3.2 (–10°C)	4.0 (–10°C)	5.0 (–10°C)
	Declared Capacity	at reference design temperature	kW	3.2 (–10°C)	4.0 (–10°C)	5.0 (–10°C)
		at bivalent temperature	kW	3.2 (–10°C)	4.0 (–10°C)	5.0 (–10°C)
		at operation limit temperature	kW	3.0 (–25°C)	3.4 (–25°C)	3.6 (–25°C)
	Back Up Heating Capacity		kW	0.0 (–10°C)	0.0 (–10°C)	0.0 (–10°C)
	Annual Electricity Consumption (*2)		kWh/a	973	1216	1625
	SCOP (*4)			4.6	4.6	4.3
		Energy Efficiency Class		A++	A++	A+
	Capacity	Rated	kW	3.2	4.0	5.0
		Min - Max	kW	0.9 - 6.2	0.9 - 6.6	0.9 - 7.8
	Total Input	Rated	kW	0.760	1.020	1.300
Operating Current (max)			A	10.0	11.6	13.9
Indoor Unit	Input	Rated	kW	0.039	0.04	0.047
	Operating Current (max)		A	0.4		
	Dimensions	H × W × D	mm	280 - 838 - 229		
	Weight		kg	10		
	Air Volume (SLo-Lo-Mid-Hi-SHi (*3) (Dry/Wet))	Cooling	m³/min	3.9 - 5.9 - 8.2 - 10.4 - 12.3	3.9 - 6.1 - 8.3 - 10.7 - 13.1	5.5 - 7.6 - 9.8 - 12.0 - 13.1
		Heating	m³/min	3.9 - 6.3 - 9.0 - 12.0 - 13.2	3.9 - 6.9 - 10.2 - 13.5 - 14.7	5.5 - 8.4 - 11.4 - 14.4 - 15.5
	Sound Level (SPL) (SLo-Lo-Mid-Hi-SHi (*3))	Cooling	dB(A)	19 - 27 - 36 - 41 - 46	19 - 27 - 36 - 42 - 47	28 - 34 - 40 - 45 - 48
		Heating	dB(A)	19 - 31 - 39 - 46 - 49	19 - 33 - 42 - 49 - 52	28 - 36 - 45 - 51 - 54
	Sound Level (PWL)		dB(A)	60		
Outdoor Unit	Dimensions	H × W × D	mm	550 - 800 - 285	714 - 800 - 285	714 - 800 - 285
	Weight		kg	34	40	40
	Air Volume	Cooling	m³/min	30.4	40.2	40.2
		Heating	m³/min	30.4	40.2	40.2
	Sound Level (SPL)	Cooling	dB(A)	46	49	51
		Heating	dB(A)	49	52	54
	Sound Level (PWL)	Cooling	dB(A)	60	61	64
	Operating Current (max)		A	9.6	11.2	13.5
	Breaker Size		A	12	12	16
Ext. Piping	Diameter	Liquid / Gas	mm	6.35 / 9.52	6.35 / 9.52	6.35 / 9.52
	Max. Length	Out-In	m	20	30	30
	Max. Height	Out-In	m	12	15	15
Guaranteed Operating Range [Outdoor]		Cooling	°C	–10 ~ +46	–10 ~ +46	–10 ~ +46
		Heating	°C	–25 ~ +24	–25 ~ +24	–25 ~ +24

(*1) Refrigerant leakage contributes to climate change. Refrigerant with lower global warming potential (GWP) would contribute less to global warming than a refrigerant with higher GWP, if leaked to the atmosphere. This appliance contains a refrigerant fluid with a GWP equal to 1975. This means that if 1kg of this refrigerant fluid would be leaked to the atmosphere, the impact on global warming would be 1975 times higher than 1kg of CO_2, over a period of 100 years. Never try to interfere with the refrigerant circuit yourself or disassemble the product yourself and always ask a professional.
The GWP of R410A is 2088 in the IPCC 4th Assessment Report.
(*2) Energy consumption based on standard test results. Actual energy consumption will depend on how the appliance is used and where it is located.
(*3) SHi: Super High
(*4) SEER, SCOP and other related description are based on COMMISSION DELEGATED REGULATION (EU) No.626/2011. The temperature conditions for calculating SCOP are based on "Average Season".
(*5) Please see page 51-52 for heating (warmer season) specifications.

MFZ-KJ SERIES

DC Inverter | DC Fan Motor | PAM | Grooved Piping | SEER A+++ | SCOP A+

Indoor Unit

R410A
Single / Multi

MFZ-KJ25/35/50VE2

GOOD DESIGN AWARD 2014

Outdoor Unit

MUFZ-KJ25/35VEHZ

MUFZ-KJ50VEHZ

Remote Controller

Econo Cool | Pure White | AUTO VANE | Anti-allergy Enzyme | Nano Platinum | SWING | AUTO | i save | ACO | Auto Restart | Low Temp Cooling | Optional | Group Control | Optional | M-NET connection | Optional | Wi-Fi Interface | Optional

Cleaning-free pipe route | Flare connection | Self Diagnosis | Failure Recall

Type				Inverter Heat Pump		
Indoor Unit				MFZ-KJ25VE2	MFZ-KJ35VE2	MFZ-KJ50VE2
Outdoor Unit				MUFZ-KJ25VEHZ	MUFZ-KJ35VEHZ	MUFZ-KJ50VEHZ
Refrigerant				R410A (*1)		
Power Supply	Source			Outdoor power supply		
	Outdoor (V/Phase/Hz)			230 / Single / 50		
Cooling	Design Load		kW	2.5	3.5	5.0
	Annual Electricity Consumption (*2)		kWh/a	102	150	266
	SEER (*4)			8.5	8.1	6.5
		Energy Efficiency Class		A+++	A++	A++
	Capacity	Rated	kW	2.5	3.5	5.0
		Min - Max	kW	0.5 - 3.4	0.5 - 3.7	1.6 - 5.7
	Total Input	Rated	kW	0.540	0.940	1.410
Heating (Average Season)	Design Load		kW	3.5	3.6	4.5
	Declared Capacity	at reference design temperature	kW	3.5	3.6	4.5
		at bivalent temperature	kW	3.5	3.6	4.5
		at operation limit temperature	kW	1.6	2.3	3.3
	Back Up Heating Capacity		kW	0.0	0.0	0.0
	Annual Electricity Consumption (*2)		kWh/a	1104	1158	1467
	SCOP (*4)			4.4	4.3	4.2
		Energy Efficiency Class		A+	A+	A+
	Capacity	Rated	kW	3.4	4.3	6.0
		Min - Max	kW	1.2 - 5.1	1.2 - 5.8	2.2 - 8.4
	Total Input	Rated	kW	0.770	1.100	1.610
Operating Current (max)			A	4.42	3.91	3.73
Indoor Unit	Input	Rated	kW	0.016	0.016	0.038
	Operating Current (max)		A	0.17	0.17	0.34
	Dimensions	H × W × D	mm	600 - 750 - 215		
	Weight		kg	15	15	15
	Air Volume (SLo-Lo-Mid-Hi-SHi (*3) (Dry/Wet))	Cooling	m^3/min	3.9 - 4.9 - 5.9 - 7.1 - 8.2	3.9 - 4.9 - 5.9 - 7.1 - 8.2	5.6 - 6.7 - 8.0 - 9.3 - 10.6
		Heating	m^3/min	3.9 - 5.1 - 6.2 - 7.7 - 9.7	3.9 - 5.1 - 6.2 - 7.7 - 9.7	6.0 - 7.4 - 9.4 - 11.6 - 14.0
	Sound Level (SPL) (SLo-Lo-Mid-Hi-SHi (*3))	Cooling	dB(A)	20 - 25 - 30 - 35 - 39	20 - 25 - 30 - 35 - 39	27 - 31 - 35 - 39 - 44
		Heating	dB(A)	19 - 25 - 30 - 35 - 41	19 - 25 - 30 - 35 - 41	29 - 35 - 40 - 45 - 50
	Sound Level (PWL)		dB(A)	49	50	56
Outdoor Unit	Dimensions	H × W × D	mm	550 - 800 - 285		880 - 840 - 330
	Weight		kg	37	37	55
	Air Volume	Cooling	m^3/min	31.3	31.3	45.8
		Heating	m^3/min	33.6	33.6	45.8
	Sound Level (SPL)	Cooling	dB(A)	46	47	49
		Heating	dB(A)	51	51	51
	Sound Level (PWL)	Cooling	dB(A)	59	60	63
	Operating Current (max)		A	9.2	10	13.6
	Breaker Size		A	10	12	16
Ext. Piping	Diameter	Liquid / Gas	mm	6.35 / 9.52	6.35 / 9.52	6.35 / 12.7
	Max. Length	Out-In	m	20	20	30
	Max. Height	Out-In	m	12	12	15
Guaranteed Operating Range [Outdoor]		Cooling	℃	−10 ~ +46	−10 ~ +46	−10 ~ +46
		Heating	℃	−25 ~ +24	−25 ~ +24	−25 ~ +24

(*1) Refrigerant leakage contributes to climate change. Refrigerant with lower global warming potential (GWP) would contribute less to global warming than a refrigerant with higher GWP, if leaked to the atmosphere. This appliance contains a refrigerant fluid with a GWP equal to 1975. This means that if 1kg of this refrigerant fluid would be leaked to the atmosphere, the impact on global warming would be 1975 times higher than 1kg of CO_2, over a period of 100 years. Never try to interfere with the refrigerant circuit yourself or disassemble the product yourself and always ask a professional.
The GWP of R410A is 2088 in the IPCC 4th Assessment Report.
(*2) Energy consumption based on standard test results. Actual energy consumption will depend on how the appliance is used and where it is located.
(*3) SHi: Super High
(*4) SEER, SCOP and other related description are based on COMMISSION DELEGATED REGULATION (EU) No.626/2011. The temperature conditions for calculating SCOP are based on "Average Season".

ZUBADAN SERIES

The ZUBADAN Series incorporates an original Flash Injection technology that improves the already high heating capacity of the system. This new member of the series line-up ensures comfortable heat pump-driven heating performance in cold regions.

✻Units in photo are Japanese models.
European model specifications are different.

Improved Heating Performance

Mitsubishi Electric's unique "Flash Injection" circuit achieves remarkably high heating performance. This technology has resulted in an excellent heating capacity rating in outdoor temperatures as low as -15°C, and the guaranteed heating operation range of the heating mode has been extended to -25°C. Accordingly, the heat-pump units of the ZUBADAN Series are perfect for warming homes in the coldest of regions.

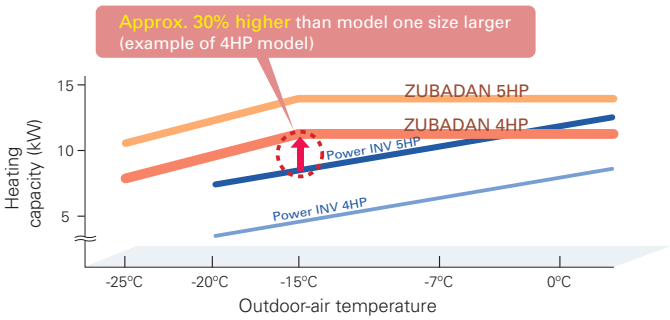

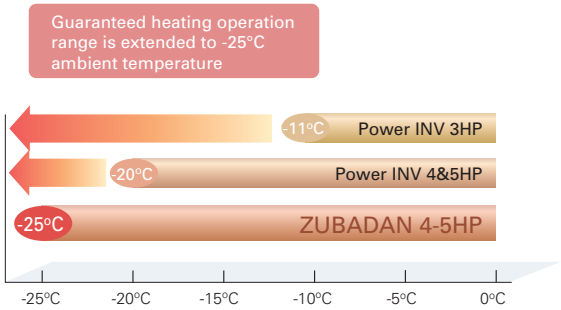

Enhanced Comfort

The Flash Injection circuit improves start-up and recover from the defrosting operation. A newly introduced defrost operation control also improves defrost frequency. These features enable the temperature to reach the set temperature more quickly, and contribute to maintaining it at the desired setting.

Quick Start-up

■Operation at +2°C outdoor temperature

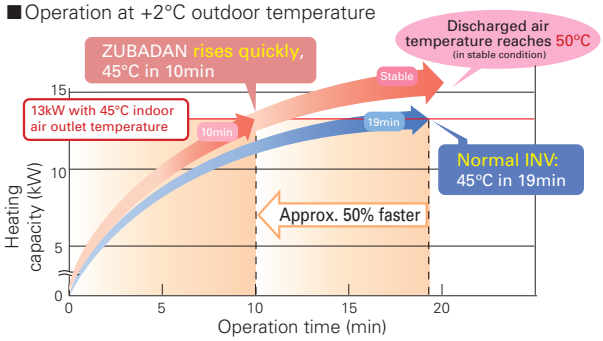

■Operation at -20°C outdoor temperature

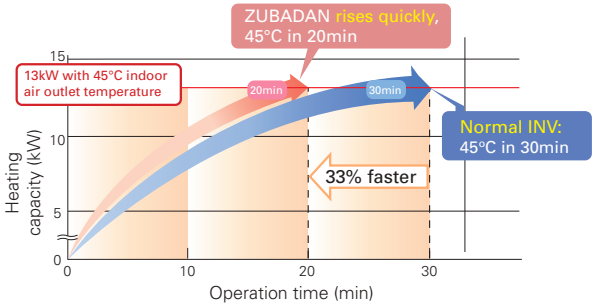

ZUBADAN Defrost Control and Faster Recovery from Defrost Operation

Field Test Results: Office building in Asahikawa, Hokkaido, Japan

■Operation data for 25 Jan. 2005

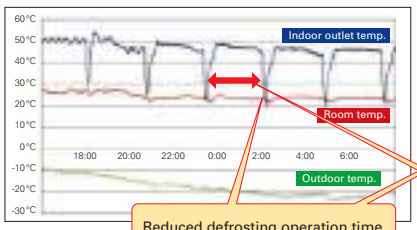

Reduced defrosting operation time from 4 to 3 minutes.

■Operation data for 2 Dec. 2004

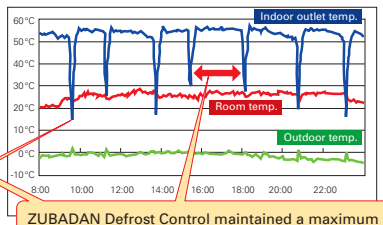

ZUBADAN Defrost Control maintained a maximum interval of 150 minutes between defrosting operations at outdoor temperatures of approximately -20°C and 0°C.

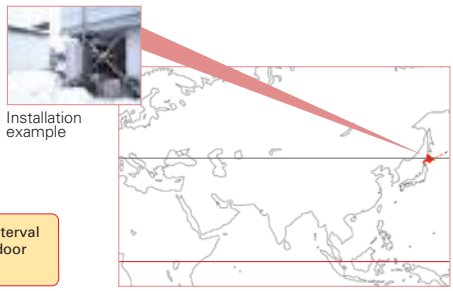

Installation example

ErP Lot 10 Compliant with High Energy-efficiency Achieving SEER/SCOP Rank A and A+

Powerful heating yet annually high energy efficiency in both cooling and heating, achieving rank A and A+.

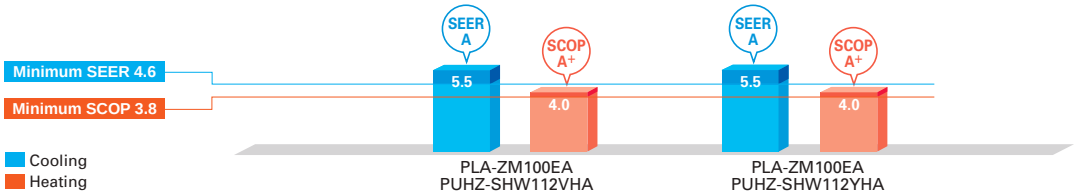

Mitsubishi Electric's Flash Injection Technology The Key to High Heating Performance at Low Outdoor Temperatures

■Flash Injection Circuit

ZUBADAN

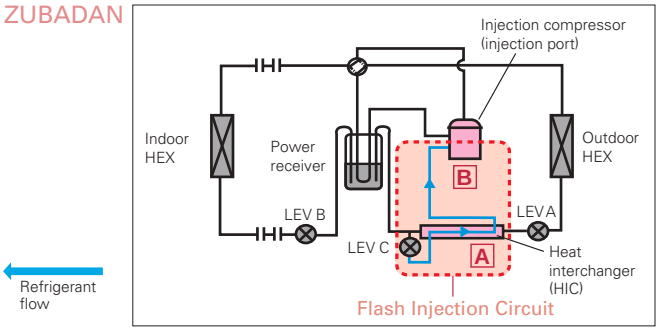

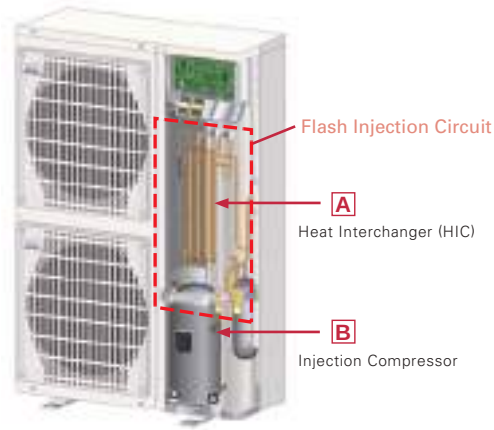

The ZUBADAN Series is equipped with Mitsubishi Electric's original Flash Injection Circuit, which is comprised of a bypass circuit and heat interchanger (HIC). The HIC transforms rerouted liquid refrigerant into a gas-liquid state to lower compression load. This process ensures excellent heating performance even when the outdoor temperature drops very low.
In traditional units, when the outdoor temperature is low, the volume of refrigerant circulating in the compressor decreases due to the drop in refrigerant pressure and the protection from overheating caused by high compression, thereby reducing heating capacity. The Flash Injection Circuit injects refrigerant to maintain the refrigerant circulation volume and compressor operation load, thereby maintaining heating capacity.

Mollier Chart Image Representing Flash Injection Circuit Operation

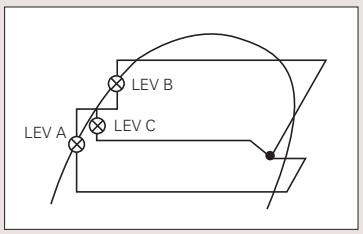

A Heat Interchanger (HIC)

HIC cross-sectional view

Purpose: Transform liquid refrigerant into liquid-gas state

Effect: Injection circuit increases energy efficiency

The compressor is subjected to a heavy load when compressing liquid refrigerant, and the result is lower operation efficiency. The addition of HIC supports refrigerant heat exchange at two different pressure levels. The heat-exchange process transforms the injected liquid refrigerant into a gas liquid state, thereby decreasing the load on the compressor during the compression process.

B Injection Compressor

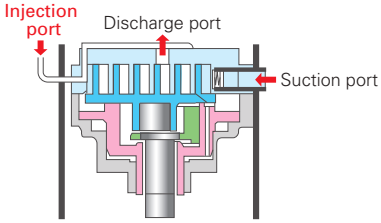

Purpose: To increase the volume of refrigerant being circulated

Effect: Improves heating capacity at low outdoor temperatures, and enables higher indoor-air outlet temperature adjustment and higher defrost operation speed

Refrigerant passes from the HIC into the compressor through the injection port. Having two refrigerant inlets makes it possible to raise the volume of refrigerant being circulated when the outdoor temperature is low and at the start of heating operation.

PLZ-SHW SERIES

DC Inverter · Vector Sine Wave · DC Scroll · Rare Earth Magnet · DC Fan Motor · Vector-Wave · PAM · Power Receiver · Grooved Piping · ZUBADAN

Indoor Unit

R410A

PLA-ZM100/125EA

Panel

Panel	With Signal Receiver	With 3D i-see Sensor	With Wireless Remote Controller	With Auto Elevation
PLP-6EA				
PLP-6EAL	✓			
PLP-6EAE		✓		
PLP-6EALE	✓	✓		
PLP-6EAJ	✓			✓
PLP-6EAJE	✓	✓		✓
PLP-6EALM	✓		✓	
PLP-6EALME	✓	✓	✓	

Outdoor Unit

R410A

PUHZ-SHW112VHA(-BS)
PUHZ-SHW112/140YHA(-BS)

Remote Controller

Enclosed in
PLP-6EALM/PLP-6EALME

*optional

*optional

*optional

i-see Sensor (Optional) · Demand Control (Optional 100/125) · Pure White · AUTO VANE · Fresh-air Intake · High-efficiency (Optional) · Long Life · Check! · SWING · High Ceiling · Low Ceiling · AUTO · ACO · Auto Restart · Low Temp Cooling · Silent · Ampere Limit · Rotation Back-up (Optional) · (Optional) · Group Control · M-NET connection (Optional) · Wi-Fi Interface (Optional) · COMPO · Cleaning-free pipe reuse · Wiring Reuse (Optional) · Drain Lift Up · Pump Down · Flare connection · Self Diagnosis · Failure Recall

Type				Inverter Heat Pump		
Indoor Unit				PLA-ZM100EA		PLA-ZM125EA
Outdoor Unit				PUHZ-SHW112VHA	PUHZ-SHW112YHA	PUHZ-SHW140YHA
Refrigerant				R410A*1		
Power Supply	Source			Outdoor power supply		
	Outdoor (V/Phase/Hz)			230 / 1 / 50	400 / 3 / 50	400 / 3 / 50
Cooling	Capacity	Rated	kW	10.0	10.0	12.5
		Min - Max	kW	4.9 - 11.4	4.9 - 11.4	5.5 - 14.0
	Total Input	Rated	kW	2.857	2.857	5.000
	EER			–	–	2.50
		EEL Rank		–	–	–
	Design Load		kW	10.0	10.0	–
	Annual Electricity Consumption*2		kWh/a	633	633	–
	SEER*4			5.5	5.5	–
		Energy Efficiency Class		A	A	–
Heating (Average Season)	Capacity	Rated	kW	11.2	11.2	14.0
		Min - Max	kW	4.5 - 14.0	4.5 - 14.0	5.0 - 16.0
	Total Input	Rated	kW	2.667	2.667	4.000
	COP			–	–	3.50
		EEL Rank		–	–	–
	Design Load		kW	12.7	12.7	–
	Declared Capacity	at reference design temperature	kW	11.2 (-10°C)	11.2 (-10°C)	–
		at bivalent temperature	kW	11.2 (-7°C)	11.2 (-7°C)	–
		at operation limit temperature	kW	9.3 (-25°C)	9.3 (-25°C)	–
	Back Up Heating Capacity		kW	1.5	1.5	–
	Annual Electricity Consumption*2		kWh/a	4420	4420	–
	SCOP*4			4.0	4.0	–
		Energy Efficiency Class		A+	A+	–
Operating Current (max)			A	35.5	13.5	13.5
Indoor Unit	Input	Rated	kW	0.07	0.07	0.08
	Operating Current (max)		A	0.47	0.47	0.52
	Dimensions <Panel>	H × W × D	mm	298-840-840 <40-950-950>		
	Weight <Panel>		kg	26 <5>	26 <5>	26 <5>
	Air Volume [Lo-Mi2-Mi1-Hi]		m^3/min	19 - 22 - 25 - 28	19 - 22 - 25 - 28	21 - 24 - 26 - 29
	Sound Level (SPL) [Lo-Mi2-Mi1-Hi]		dB(A)	31 - 34 - 37 - 40	31 - 34 - 37 - 40	33 - 36 - 39 - 41
	Sound Level (PWL)		dB(A)	61	61	62
Outdoor Unit	Dimensions	H × W × D	mm	1350 - 950 - 330 (+30)		
	Weight		kg	120	134	134
	Air Volume	Cooling	m^3/min	100	100	100
		Heating	m^3/min	100	100	100
	Sound Level (SPL)	Cooling	dB(A)	51	51	51
		Heating	dB(A)	52	52	52
	Sound Level (PWL)	Cooling	dB(A)	69	69	69
	Operating Current (max)		A	35	13	13
	Breaker Size		A	40	16	16
Ext. Piping	Diameter	Liquid / Gas	mm	9.52 / 15.88	9.52 / 15.88	9.52 / 15.88
	Max. Length	Out-In	m	75	75	75
	Max. Height	Out-In	m	30	30	30
Guaranteed Operating Range [Outdoor]		Cooling*3	°C	–15 ~ +46	–15 ~ +46	–15 ~ +46
		Heating	°C	–25 ~ +21	–25 ~ +21	–25 ~ +21

*1 Refrigerant leakage contributes to climate change. Refrigerant with lower global warming potential (GWP) would contribute less to global warming than a refrigerant with higher GWP, if leaked to the atmosphere. This appliance contains a refrigerant fluid with a GWP equal to 1975. This means that if 1kg of this refrigerant fluid would be leaked to the atmosphere, the impact on global warming would be 1975 times higher than 1kg of CO_2, over a period of 100 years. Never try to interfere with the refrigerant circuit yourself or disassemble the product yourself and always ask a professional.
*2 Energy consumption based on standard test results. Actual energy consumption will depend on how the appliance is used and where it is located.
*3 Optional air protection guide is required where ambient temperature is lower than –5°C.
*4 SEER and SCOP are based on 2009/125/EC:Energy-related Products Directive and Regulation(EU) No206/2012.

PLZ-SHW SERIES

DC Inverter · Vector Sine Wave · DC Scroll · Rare Earth Magnet · DC Fan Motor · Vector+Wave · PAM · Power Receiver · Grooved Piping · ZUBADAN

Indoor Unit

R410A

PLA-M100/125EA

Panel

Panel	With Signal Receiver	With 3D i-see Sensor	With Wireless Remote Controller	With Auto Elevation
PLP-6EA				
PLP-6EAL	✓			
PLP-6EAE		✓		
PLP-6EALE	✓	✓		
PLP-6EAJ	✓			✓
PLP-6EAJE	✓	✓		✓
PLP-6EALM	✓		✓	
PLP-6EALME	✓	✓	✓	

Outdoor Unit

R410A

PUHZ-SHW112VHA(-BS)
PUHZ-SHW112/140YHA(-BS)

Remote Controller

Enclosed in
PLP-6EALM/PLP-6EALME

*optional

*optional

*optional

i-see Sensor (Optional) · Demand Control (Optional 100/125) · Pure White · AUTO VANE · Fresh-air Intake · High-efficiency (Optional) · Long Life · Check! · SWING · High Ceiling · Low Ceiling · AUTO · ACO · Auto Restart · Low Temp Cooling

Silent · Ampere Limit · Rotation Back-up (Optional) · (Optional) · Group Control · M-NET connection (Optional) · Wi-Fi Interface (Optional) · COMPO · Cleaning-free pipe reuse · Wiring Reuse (Optional) · Drain Lift Up · Pump Down · Flare connection · Self Diagnosis · Failure Recall

Type				Inverter Heat Pump		
Indoor Unit				PLA-M100EA		PLA-M125EA
Outdoor Unit				PUHZ-SHW112VHA	PUHZ-SHW112YHA	PUHZ-SHW140YHA
Refrigerant				R410A*1		
Power Supply	Source			Outdoor power supply		
	Outdoor (V/Phase/Hz)			230 / 1 / 50	400 / 3 / 50	400 / 3 / 50
Cooling	Capacity	Rated	kW	10.0	10.0	12.5
		Min - Max	kW	4.9 - 11.4	4.9 - 11.4	5.5 - 14.0
	Total Input	Rated	kW	2.940	2.940	5.000
	EER			–	–	2.50
		EEL Rank		–	–	–
	Design Load		kW	10.0	10.0	–
	Annual Electricity Consumption*2		kWh/a	661	661	–
	SEER*4			5.3	5.3	–
		Energy Efficiency Class		A	A	–
Heating (Average Season)	Capacity	Rated	kW	11.2	11.2	14.0
		Min - Max	kW	4.5 - 14.0	4.5 - 14.0	5.0 - 16.0
	Total Input	Rated	kW	2.793	2.793	4.000
	COP			–	–	3.50
		EEL Rank		–	–	–
	Design Load		kW	12.7	12.7	–
	Declared Capacity	at reference design temperature	kW	11.2 (-10°C)	11.2 (-10°C)	–
		at bivalent temperature	kW	11.2 (-7°C)	11.2 (-7°C)	–
		at operation limit temperature	kW	9.3 (-25°C)	9.3 (-25°C)	–
	Back Up Heating Capacity		kW	1.5	1.5	–
	Annual Electricity Consumption*2		kWh/a	4445	4445	–
	SCOP*4			4.0	4.0	–
		Energy Efficiency Class		A+	A+	–
Operating Current (max)			A	35.5	13.5	13.7
Indoor Unit	Input	Rated	kW	0.07	0.07	0.08
	Operating Current (max)		A	0.46	0.46	0.66
	Dimensions <Panel>	H × W × D	mm	298-840-840 <40-950-950>		
	Weight <Panel>		kg	24 <5>	24 <5>	26 <5>
	Air Volume [Lo-Mi2-Mi1-Hi]		m^3/min	19 - 23 - 26 - 29	19 - 23 - 26 - 29	21 - 25 - 28 - 31
	Sound Level (SPL) [Lo-Mi2-Mi1-Hi]		dB(A)	31 - 34 - 37 - 40	31 - 34 - 37 - 40	33 - 37 - 41 - 44
	Sound Level (PWL)		dB(A)	61	61	65
Outdoor Unit	Dimensions	H × W × D	mm	1350 - 950 - 330 (+30)		
	Weight		kg	120	134	134
	Air Volume	Cooling	m^3/min	100	100	100
		Heating	m^3/min	100	100	100
	Sound Level (SPL)	Cooling	dB(A)	51	51	51
		Heating	dB(A)	52	52	52
	Sound Level (PWL)	Cooling	dB(A)	69	69	69
	Operating Current (max)		A	35	13	13
	Breaker Size		A	40	16	16
Ext. Piping	Diameter	Liquid / Gas	mm	9.52 / 15.88	9.52 / 15.88	9.52 / 15.88
	Max. Length	Out-In	m	75	75	75
	Max. Height	Out-In	m	30	30	30
Guaranteed Operating Range [Outdoor]		Cooling*3	°C	–15 ~ +46	–15 ~ +46	–15 ~ +46
		Heating	°C	–25 ~ +21	–25 ~ +21	–25 ~ +21

*1 Refrigerant leakage contributes to climate change. Refrigerant with lower global warming potential (GWP) would contribute less to global warming than a refrigerant with higher GWP, if leaked to the atmosphere. This appliance contains a refrigerant fluid with a GWP equal to 1975. This means that if 1kg of this refrigerant fluid would be leaked to the atmosphere, the impact on global warming would be 1975 times higher than 1kg of CO_2, over a period of 100 years. Never try to interfere with the refrigerant circuit yourself or disassemble the product yourself and always ask a professional.
*2 Energy consumption based on standard test results. Actual energy consumption will depend on how the appliance is used and where it is located.
*3 Optional air protection guide is required where ambient temperature is lower than –5°C.
*4 SEER and SCOP are based on 2009/125/EC:Energy-related Products Directive and Regulation(EU) No206/2012.

PEDZ-SHW JA SERIES

DC Inverter · Vector Sine Wave · DC Scroll · Rare Earth Magnet · DC Fan Motor · Vector-Wave · PAM · Power Receiver · Grooved Piping · ZUBADAN

Indoor Unit

R410A

PEAD-M100JA(L)

Outdoor Unit

R410A

PUHZ-SHW112VHA(-BS)
PUHZ-SHW112/140YHA(-BS)

Remote Controller

*optional

*optional

*optional

*optional

Demand Control (Optional) · Long Life · Check! · AUTO · ACO · Auto Restart · Low Temp Cooling · Silent · Ampere Limit (100/125) · Rotation Back-up (Optional) · (Optional) · Group Control · M-NET connection (Optional) · Wi-Fi Interface (Optional) · COMPO · Cleaning free, pipe route

Wiring Reuse (Optional) · Drain Lift Up (JAQ) · Pump Down · Flare connection · Self Diagnosis · Failure Recall

Type				Inverter Heat Pump	
Indoor Unit				PEAD-M100JA(L)	
Outdoor Unit				PUHZ-SHW112VHA(-BS)	PUHZ-SHW112YHA(-BS)
Refrigerant				R410A*1	
Power Supply	Source			Outdoor power supply	
	Outdoor (V/Phase/Hz)			VHA:230 / Single / 50, YHA:400 / Three / 50	
Cooling	Capacity	Rated	kW	10.0	10.0
		Min - Max	kW	4.9 - 11.4	4.9 - 11.4
	Total Input	Rated	kW	2.924 (2.904)	2.924 (2.904)
	EER			–	–
		EEL Rank		–	–
	Design Load		kW	10.0	10.0
	Annual Electricity Consumption*2		kWh/a	729 (714)	729 (714)
	SEER*4			4.8 (4.9)	4.8 (4.9)
		Energy Efficiency Class		B	B
Heating (Average Season)	Capacity	Rated	kW	11.2	11.2
		Min - Max	kW	4.5 - 14.0	4.5 - 14.0
	Total Input	Rated	kW	3.103	3.103
	COP			–	–
		EEL Rank		–	–
	Design Load		kW	12.7	12.7
	Declared Capacity	at reference design temperature	kW	11.2	11.2
		at bivalent temperature	kW	11.2	11.2
		at operation limit temperature	kW	9.4	9.4
	Back Up Heating Capacity		kW	1.5	1.5
	Annual Electricity Consumption*2		kWh/a	4664	4664
	SCOP*4			3.8	3.8
		Energy Efficiency Class		A	A
Operating Current (max)			A	37.7	15.7
Indoor Unit	Input [Cooling / Heating]	Rated	kW	0.25 (0.23) / 0.23	0.25 (0.23) / 0.23
	Operating Current (max)		A	2.65	2.65
	Dimensions	H × W × D	mm	250 - 1400 - 732	250 - 1400 - 732
	Weight		kg	41 (40)	41 (40)
	Air Volume [Lo-Mid-Hi]		m^3/min	24.0 - 29.0 - 34.0	24.0 - 29.0 - 34.0
	External Static Pressure		Pa	35 / 50 / 70 / 100 / 150	35 / 50 / 70 / 100 / 150
	Sound Level (SPL) [Lo-Mid-Hi]		dB(A)	29 - 34 - 38	29 - 34 - 38
	Sound Level (PWL)		dB(A)	61	61
Outdoor Unit	Dimensions	H × W × D	mm	1350 - 950 - 330 (+30)	1350 - 950 - 330 (+30)
	Weight		kg	120	134
	Air Volume	Cooling	m^3/min	100.0	100.0
		Heating	m^3/min	100.0	100.0
	Sound Level (SPL)	Cooling	dB(A)	51	51
		Heating	dB(A)	52	52
	Sound Level (PWL)	Cooling	dB(A)	69	69
	Operating Current (max)		A	35.0	13.0
	Breaker Size		A	40	16
Ext. Piping	Diameter	Liquid / Gas	mm	9.52 / 15.88	9.52 / 15.88
	Max. Length	Out-In	m	75	75
	Max. Height	Out-In	m	30	30
Guaranteed Operating Range [Outdoor]		Cooling*3	℃	–15 ~ +46	–15 ~ +46
		Heating	℃	–25 ~ +21	–25 ~ +21

*1 Refrigerant leakage contributes to climate change. Refrigerant with lower global warming potential (GWP) would contribute less to global warming than a refrigerant with higher GWP, if leaked to the atmosphere. This appliance contains a refrigerant fluid with a GWP equal to 1975. This means that if 1 kg of this refrigerant fluid would be leaked to the atmosphere, the impact on global warming would be 1975 times higher than 1 kg of CO_2, over a period of 100 years. Never try to interfere with the refrigerant circuit yourself or disassemble the product yourself and always ask a professional.
*2 Energy consumption based on standard test results. Actual energy consumption will depend on how the appliance is used and where it is located.
*3 Optional air protection guide is required where ambient temperature is lower than –5°C.
*4 SEER and SCOP are based on 2009/125/EC:Energy-related Products Directive and Regulation(EU) No206/2012.

PKZ-SHW SERIES

DC Inverter · Vector Sine Wave · DC Scroll · Rare Earth Magnet · DC Fan Motor · Vector-Wave · PAM · Power Receiver · Grooved Piping · ZUBADAN

Indoor Unit

R410A

PKA-M100KA(L)

Outdoor Unit

R410A

PUHZ-SHW112VHA(-BS)
PUHZ-SHW112/140YHA(-BS)

Remote Controller

*optional

*optional

*optional

Demand Control (Optional) · Pure White · AUTO VANE · Check! (Optional) · SWING · AUTO · ACO · Auto Restart · Low Temp Cooling · Silent · Ampere Limit · Rotation Back-up (Optional) · (Optional) · Group Control (Optional) · M-NET connection (Optional) · Wi-Fi Interface (Optional)

COMPO · Cleaning-free pipe relief · Wiring Reuse (Optional) · Drain Lift Up (Optional) · Pump Down · Flare connection · Self Diagnosis · Failure Recall

Type				Inverter Heat Pump	
Indoor Unit				PKA-M100KA(L)	
Outdoor Unit				PUHZ-SHW112VHA(-BS)	PUHZ-SHW112YHA(-BS)
Refrigerant				R410A*1	
Power Supply	Source			Outdoor power supply	
	Outdoor (V/Phase/Hz)			VHA:230 / Single / 50, YHA:400 / Three / 50	
Cooling	Capacity	Rated	kW	10.0	10.0
		Min - Max	kW	4.9 - 11.4	4.9 - 11.4
	Total Input	Rated	kW	2.924	2.924
	Design Load		kW	10.0	10.0
	Annual Electricity Consumption*2		kWh/a	673	673
	SEER*4			5.2	5.2
		Energy Efficiency Class		A	A
Heating (Average Season)	Capacity	Rated	kW	11.2	11.2
		Min - Max	kW	4.5 - 14.0	4.5 - 14.0
	Total Input	Rated	kW	3.103	3.103
	Design Load		kW	12.7	12.7
	Declared Capacity	at reference design temperature	kW	11.2	11.2
		at bivalent temperature	kW	11.2	11.2
		at operation limit temperature	kW	9.4	9.4
	Back Up Heating Capacity		kW	1.5	1.5
	Annual Electricity Consumption*2		kWh/a	4664	4664
	SCOP*4			3.8	3.8
		Energy Efficiency Class		A	A
Operating Current (max)			A	35.6	13.6
Indoor Unit	Input	Rated	kW	0.08	0.08
	Operating Current (max)		A	0.57	0.57
	Dimensions <Panel>	H × W × D	mm	365 - 1170 - 295	
	Weight <Panel>		kg	21	21
	Air Volume [Lo-Mid-Hi]		m^3/min	20 - 23 - 26	20 - 23 - 26
	Sound Level (SPL) [Lo-Mid-Hi]		dB(A)	41 - 45 - 49	41 - 45 - 49
	Sound Level (PWL)		dB(A)	65	65
Outdoor Unit	Dimensions	H × W × D	mm	1350 - 950 - 330 (+30)	
	Weight		kg	120	134
	Air Volume	Cooling	m^3/min	100.0	100.0
		Heating	m^3/min	100.0	100.0
	Sound Level (SPL)	Cooling	dB(A)	51	51
		Heating	dB(A)	52	52
	Sound Level (PWL)	Cooling	dB(A)	69	69
	Operating Current (max)		A	35.0	13.0
	Breaker Size		A	40	16
Ext. Piping	Diameter	Liquid / Gas	mm	9.52 / 15.88	9.52 / 15.88
	Max. Length	Out-In	m	75	75
	Max. Height	Out-In	m	30	30
Guaranteed Operating Range [Outdoor]		Cooling*3	°C	–15 ~ +46	–15 ~ +46
		Heating	°C	–25 ~ +21	–25 ~ +21

*1 Refrigerant leakage contributes to climate change. Refrigerant with lower global warming potential (GWP) would contribute less to global warming than a refrigerant with higher GWP, if leaked to the atmosphere. This appliance contains a refrigerant fluid with a GWP equal to 1975. This means that if 1 kg of this refrigerant fluid would be leaked to the atmosphere, the impact on global warming would be 1975 times higher than 1 kg of CO_2, over a period of 100 years. Never try to interfere with the refrigerant circuit yourself or disassemble the product yourself and always ask a professional.
*2 Energy consumption based on standard test results. Actual energy consumption will depend on how the appliance is used and where it is located.
*3 Optional air protection guide is required where ambient temperature is lower than –5°C.
*4 SEER and SCOP are based on 2009/125/EC:Energy-related Products Directive and Regulation(EU) No206/2012.

MXZ–VAHZ SERIES

New hyper-heating MXZ allows you to create an oasis of comfort throughout your home and office in the rooms you use most, any time of the year.

Standard rated heating capacity is maintained even when the outside-air temperature drops to –15°C.

Maintains high capacity output even when outside-air temperature is low.

(MXZ-2D53VA2)

Our conventional model was not able to maintain standard rated heating capacity, making it hard to provide warming in case of low outside-air temperatures.

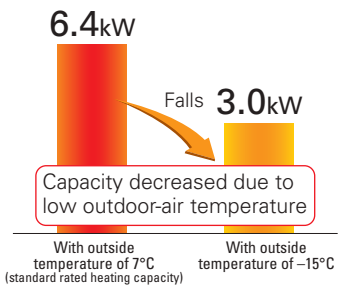

With Zubadan (MXZ-2E53VAHZ)

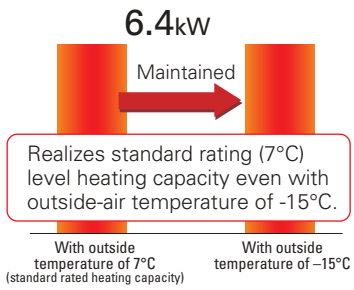

Can operate at outside-air temperature of –25°C

1. Incorporated key parts resistant to cold of up to –25°C after rigorous selection.
2. Printed circuit board-core of the air conditioner—is coated on both sides to protect it in harsh environments.

Freeze-prevention heater standard equipment

Prevents capacity loss and operation from stopping due to drain water freezing.

Drain water freezes after operation in the harsh cold

Without Freeze-prevention heater

With Hyper heating Does not freeze!

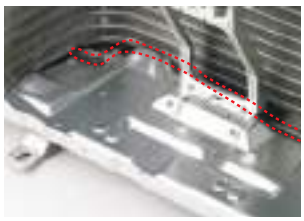

With Freeze-prevention heater

Continuous heating for long periods

Wasteful defrosting operation suppressed to enable more comfortable long-term continuous heating.

Extremely cold outside

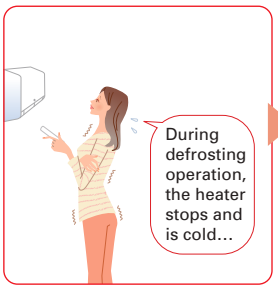

With Hyper heating

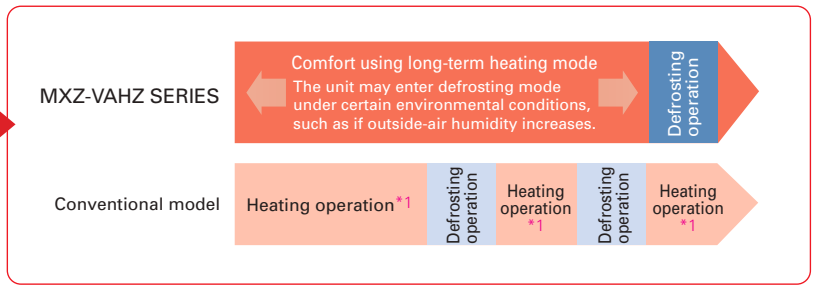

*1: Conventional model performs continuous heating approximately 30min up to a maximum of 90min.

One outdoor unit supports multiple indoor units.

With MXZ-VAHZ, one outdoor unit can cool and heat up to six rooms. They can be installed neatly in sites with limited space such as condominium balconies.

*Please note that cooling and heating modes cannot be run simultaneously in different rooms.

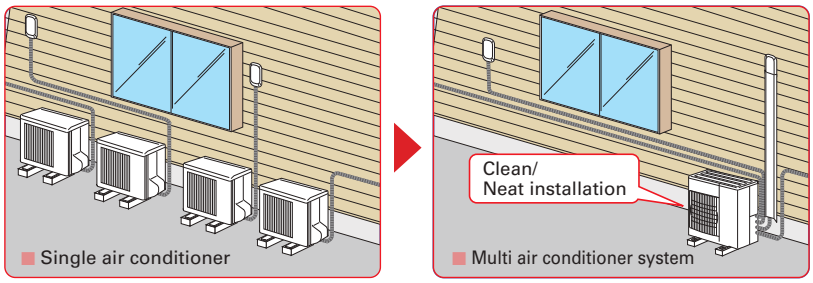

EXAMPLE SYSTEM

MXZ-4F83VFHZ system

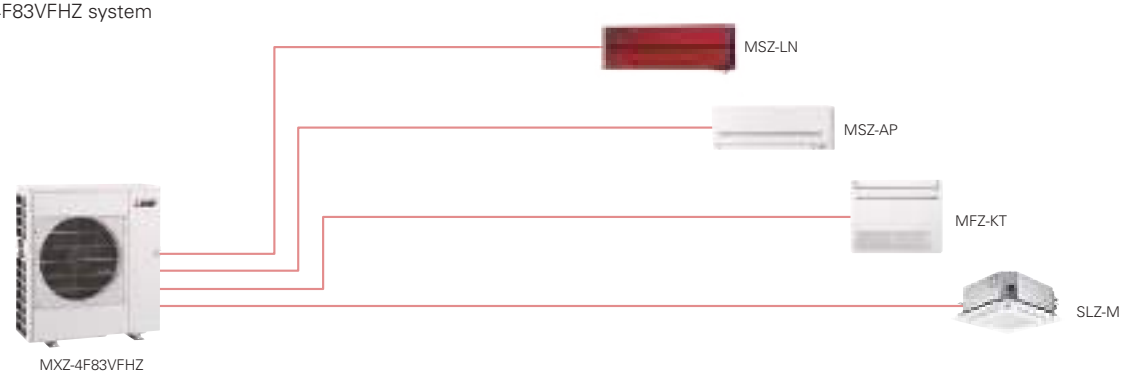

Freedom of combinations in cold region greatly enhanced

The variety of indoor unit connection options in cold regions, restricted until now, has been greatly increased.
Increased design freedom.

OUTDOOR UNITS

2-room use

R32

MXZ-2F53VFHZ

R410A

MXZ-2E53VAHZ

4-room use

R32

MXZ-4F83VFHZ

R410A

MXZ-4E83VAHZ

INDOOR UNITS

Wall-mounted

MSZ-LN

R32 R410A

MSZ-AP

R410A

MSZ-SF

R32 R410A

MSZ-EF

R410A

MSZ-GF

Floor-standing

R32

MFZ-KT

R410A

MFZ-KJ

Cassette

R32 R410A

SLZ

R32 R410A

MLZ-KP

R410A

*1

PLA

Ceiling-suspended

R410A

*1

PCA

Ceiling-concealed

R32 R410A

SEZ

R410A

*1

PEAD

*1: P series cannot be connect with MXZ-4E83VAHZ when ampere limit adjustment function is operated.

MXZ-VAHZ SERIES

Outdoor Unit

R32

MXZ-2F53VFHZ

R32

MXZ-4F83VFHZ

R410A

MXZ-2E53VAHZ

R410A

MXZ-4E83VAHZ

Type				Inverter Heat Pump			
Indoor Unit				Please refer to*4 *5			
Outdoor Unit				MXZ-2F53VFHZ	MXZ-4F83VFHZ	MXZ-2E53VAHZ	MXZ-4E83VAHZ
Refrigerant				R32*6		R410A*1	
Power Supply	**Source**			Outdoor power supply			
	Outdoor (V/Phase/Hz)			220 - 230 - 240V / Single / 50			
Cooling	**Capacity**	Rated	kW	5.3	8.3	5.3	8.3
		Min - Max	kW	1.1 - 6.0	3.5 - 9.2	1.1 - 6.0	3.5 - 9.2
	Total Input	Rated	kW	1.29	1.90	1.29	2.25
	Design Load		kW	5.3	8.3	5.3	8.3
	Annual Electricity Consumption*2		kWh/a	274	398	282	447
	SEER*4,*7			6.8	7.3	6.5	6.5
		Energy Efficiency Class*4		A++	A++	A++	A++
Heating (Average Season)	**Capacity**	Rated (7°C)	kW	6.4	9.0	6.4	9.0
		Rated (–7°C)	kW	6.4	9.0	6.4	9.0
		Rated (–15°C)	kW	6.4	9.0	6.4	9.0
		Min - Max	kW	1.0 - 7.0	3.5 - 11.6	1.0 - 7.0	3.5 - 11.6
	Total Input	Rated	kW	1.36	1.70	1.36	1.90
	Design Load		kW	6.4	10.1	6.4	10.1
	Declared Capacity	at reference design temperature	kW	6.9	10.6	6.4	9.0
		at bivalent temperature	kW	7.4	11.5	6.4	9.0
		at operation limit temperature	kW	4.1	5.7	2.4	2.5
	Back Up Heating Capacity		kW	0.0	0.0	0.0	1.1
	Annual Electricity Consumption*2		kWh/a	2172	3286	2165	3446
	SCOP*7			4.1	4.3	4.1	4.1
		Energy Efficiency Class*4		A+	A+	A+	A+
Max. Operating Current (Indoor+Outdoor)			A	15.6	28.0	15.6	28.0
Outdoor Unit	**Dimensions**	H × W × D	mm	796 × 950 × 330	1048 × 950 × 330	796 × 950 × 330	1048 × 950 × 330
	Weight		kg	61	86	61	87
	Air Volume	Cooling	m^3/min	43	63	47.0	63.0
		Heating	m^3/min	41	77	47.0	77.0
	Sound Level (SPL)	Cooling	dB(A)	45	55	45	53
		Heating	dB(A)	47	57	47	57
	Sound Level (PWL)	Cooling	dB(A)	55	66	55	66
	Breaker Size		A	16	30	16	30
Ext. Piping	**Diameter**	Liquid / Gas	mm	6.35 × 2 / 9.52 × 2	6.35× 4 / 12.7 × 1+9.52 × 3	6.35 × 2 / 9.52 × 2	6.35× 4 / 12.7 × 1+9.52 × 3
	Total Piping Length (max)		m	30	70	30	70
	Each Indoor Unit Piping Length (max)		m	20	25	20	25
	Max. Height		m	15	15	15 (10) *3	15 (10) *3
	Chargeless Length		m	30	70	20	25
Guaranteed Operating Range [Outdoor]		Cooling	°C	–10 ~ +46	–10 ~ +46	–10 ~ +46	–10 ~ +46
		Heating	°C	–25 ~ +24	–25 ~ +24	–25 ~ +24	–25 ~ +24

*1 Refrigerant leakage contributes to climate change. Refrigerant with lower global warming potential (GWP) would contribute less to global warming than a refrigerant with higher GWP, if leaked to the atmosphere. This appliance contains a refrigerant fluid with a GWP equal to 2088. This means that if 1 kg of this refrigerant fluid would be leaked to the atmosphere, the impact on global warming would be 2088 times higher than 1 kg of CO_2 , over a period of 100 years. Never try to interfere with the refrigerant circuit yourself or disassemble the product yourself and always ask a professional.
*2 Energy consumption based on standard test results.
Actual energy consumption will depend on how the appliance is used and where it is located.
*3 If the outdoor unit is installed higher than the indoor unit, max. height is reduced to 10m.
*4 EER/COP, EEL rank, SEER/SCOP values and energy efficiency class are measured when connected to the indoor units listed below.
MXZ-2F53VFHZ MSZ-LN18VG2 + MSZ-LN35VG2
MXZ-4F83VFHZ MSZ-LN18VG2 + MSZ-LN18VG2 + MSZ-LN25VG2 + MSZ-LN25VG2
MXZ-2E53VAHZ MSZ-EF18VE + MSZ-EF35VE
MXZ-4E83VAHZ MSZ-EF18VE + MSZ-EF18VE + MSZ-EF22VE + MSZ-EF25VE
*5 Indoor unit compatibility table is shown on page 115-116.
*6 Refrigerant leakage contributes to climate change. Refrigerant with lower global warming potential (GWP) would contribute less to global warming than a refrigerant with higher GWP, if leaked to the atmosphere. This appliance contains a refrigerant fluid with a GWP equal to 550. This means that if 1 kg of this refrigerant fluid would be leaked to the atmosphere, the impact on global warming would be 550 times higher than 1 kg of CO_2, over a period of 100 years. Never try to interfere with the refrigerant circuit yourself or disassemble the product yourself and always ask a professional.
The GWP of R32 is 675 in the IPCC 4th Assessment Report.
*7 SEER and SCOP are based on 2009/125/EC:Energy-related Products Directive and Regulation(EU) No206/2012.

To ensure full capacity in cold and snowy regions...

3 Important Points to Remember When Installing the Outdoor Unit

✻RAC/PAC (inc. Air to Water) /MXZ

Wind and snow can significantly reduce capacity.
Be sure to check the infomation below and install the outdoor unit correctly.

1 Installation Location

Be aware of the prevailing wind direction in winter and install the outdoor unit where it is as sheltered as possible.

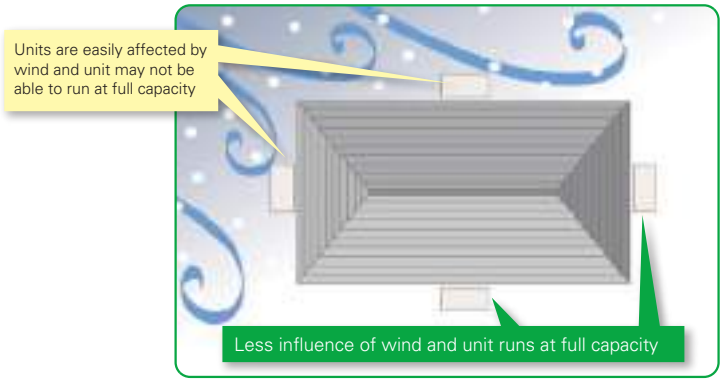

2 Measures for Drainage of Water

Case 1: Unit is installed close to passage (walkway)

Do not install the unit close to passage as drainage water from the unit may freeze and cause a slipping hazard.

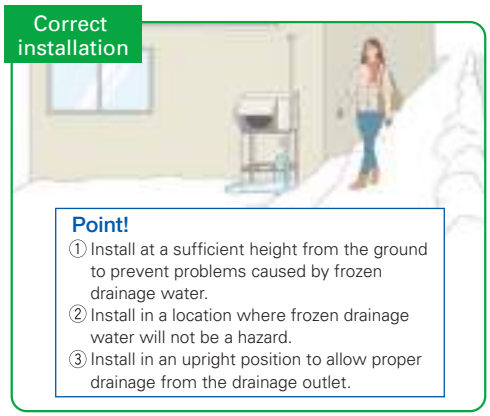

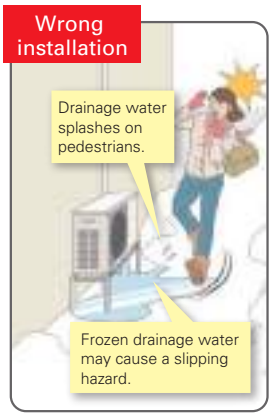

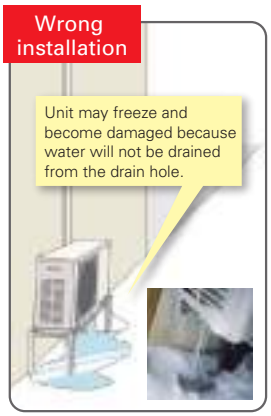

Case 2: Multiple units are installed

Do not install units on top of one another as it may cause frozen drainage water on the bottom unit.

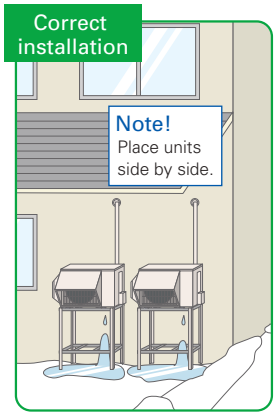

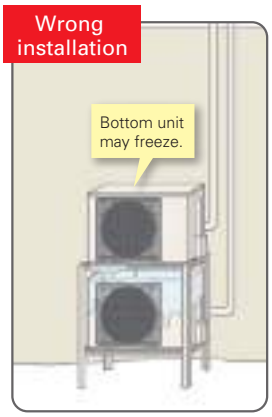

3 Measures for Snow

Unit is installed on the ground

To avoid the adverse effects of snow and frozen drainage water, install the unit on a stand to ensure a sufficient height from the ground.

[RAC / PAC / MXZ]

Correct installation

Point!

① Install at a position/height to prevent the unit being buried in snow *1 and the adverse effects of frozen drainage water.*2

② Install so as to avoid the effects of snow or snowdrift.

③ Install so as to avoid the damage from falling snow or icicles.

*1 Install at a height above the highest snowfall depth.

*2 Even for correct installations, dripping drainage water may form an icicle which needs to be cleared away regularly to prevent a blocked drainage outlet.

Wrong installation

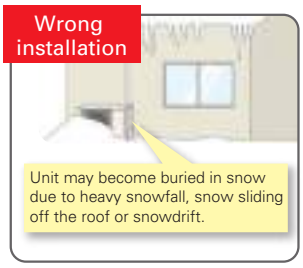

Unit may become buried in snow due to heavy snowfall, snow sliding off the roof or snowdrift.

Wrong installation

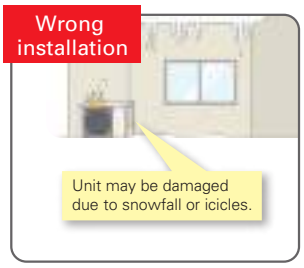

Unit may be damaged due to snowfall or icicles.

Use a stand to add sufficient height to protect the unit heat exchanger from snow and prevent icicles forming during defrost operation.

Correct installation

Minimum height (h) should be higher than the highest snowfall depth (h0)

+20cm

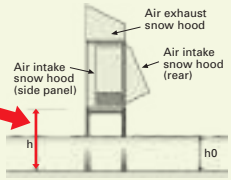

Wrong installation

Unit may become covered in snow if the stand height is insufficient.

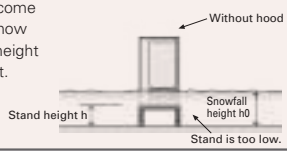

Install snow protection hood as necessary

[RAC / PAC / MXZ]

Correct installation

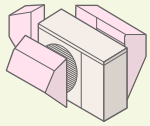

Point!

Install the snow protection hood or other cover in snowy regions.

Necessity of accessories (drain socket & centralised drain pan, stand, snow protection hood, base heater)

	Snowy region	Cold region	Remarks
	Countermeasures for snow	Countermeasures for freezing	
Drain socket, Centralised drain pan	Not used	Not used	Prevents freezing
Stand	Needed	Needed	[RAC / PAC / MXZ] 1. Install so as to prevent the unit being buried in snow (at a height greater than the highest snowfall depth). Be sure that the stand does not obstruct drainage. 2. Install so as to prevent damage to the unit due to frozen drainage water (icicles). Clearance to prevent snow accumulating. <Correct> 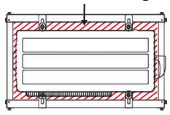
Snow protection hood	Needed *When the installation position is subject to snowfall.	—	1. Prevents heat exchanger from being covered in snow. 2. Prevents snow accumulating inside the air duct.
Base heater	—	Needed	[RAC / PAC / MXZ] Outdoor units equipped with a heater for cold regions are those with an "H" in the model name. For the cold-climate zone, use of a unit with a heater is strongly recommended. Even for the moderate-climate zone use of a unit with a heater is recommended for regions subject to high humidity in winter.

⚠ CAUTION About disposal of drainage water

When the unit is installed in cold or snowy regions :

Drainage water may freeze in the drain socket/hose and prevent the fan from rotating.

▶ **Do not attach a drain socket packaged as an accessory to the unit.**

✻ In the case that fitting a drain socket is absolutely necessary, steps must be taken so that the drainage water does not freeze.
For more information, please consult Mitsubishi Electric or one of its dealers/resellers.

Arrangement for snow protection hood	[RAC / PAC / MXZ] Separately sold parts are available for some models. Please consult Mitsubishi Electric or one of its dealers/resellers at the time of purchase for details.

NEW ECODESIGN DIRECTIVE

WHAT IS THE ErP DIRECTIVE?

The Ecodesign Directive for Energy-related Products (ErP Directive) establishes a framework to set mandatory standards for ErPs sold in the European Union (EU). The ErP directive introduces new energy-efficiency ratings across various product categories and affects how products such as computers, vacuum cleaners, boilers and even windows are classified in terms of environmental performance.
Regulations that apply to air conditioning systems of rated capacity up to 12kW came into effect as of January 1, 2013. Based the use of future-orientated technologies, Mitsubishi Electric is one step ahead of these changes, with our air conditioning systems already achieving compliance with these new regulations.

NEW ENERGY LABEL AND MEASUREMENTS

Under regulation 2011/626/EU, supplementing directive 2010/30/EU, air conditioning systems are newly classified into energy-efficiency classes on the basis of a new energy labelling system, which includes three new classes: A^{+}, A^{++} and A^{+++}.
Revisions to the measurement points and calculations of the seasonal energy efficiency ratio (SEER) and seasonal coefficient of performance (SCOP) has resulted in changes to how air conditioning systems are classified into energy-efficiency classes.
Specifically, for cooling mode, air conditioning systems must achieve at least class B. For heating mode, air conditioning systems must achieve at least a SCOP value of 3.8.

■New Energy Efficiency Label

SEER and SCOP
The SEER (Seasonal Energy Efficiency Ratio) value indicates the seasonal energy efficiency value in the cooling mode. The SCOP (Seasonal Coefficient of Performance) value refers to the seasonal efficiency in the heating mode.

Energy efficiency classes from A+++ to D SCOP in heating mode

A+++	> 5,1
A++	> 4,6
A+	> 4,0
A	> 3,4
B	> 3,1
C	> 2,8
D	< 2,5

Energy efficiency classes from A+++ to D SEER in cooling mode

A+++	> 8,5
A++	> 6,1
A+	> 5,6
A	> 5,1
B	> 4,6
C	> 4,1
D	< 3,6

Energy efficiency class
Energy efficiency class of the unit in cooling and heating mode of the unit model

In the heating mode, the indication for the unit model is shown for all three climate zones.

Nominal capacity in cooling mode
SEER value
Annual power consumption for cooling

Operating noise, indoors/outdoors
The sound power level is an important sound energy parameter for assessing a sound source. Contrary to the sound pressure - the sound power is independent of the location of the source and/or the receiver. Maximally admissible values are:

Cooling capacity ≤ 6 kW		Cooling capacity > 6 kW ≤ 12 kW	
Indoor unit	Outdoor unit	Indoor unit	Outdoor unit
60dB(A)	65dB(A)	65dB(A)	70dB(A)

Name or trademark of the manufacturer
Name of the unit/designation of model

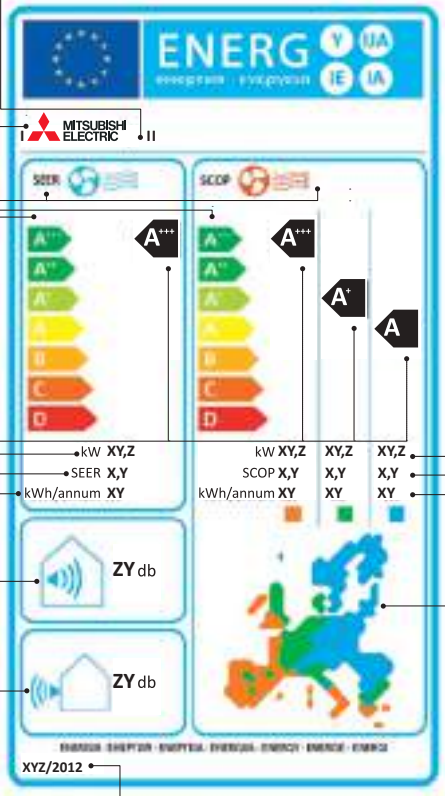

Time reference
Indication on label data

Nominal capacity in heating mode
SCOP value
Annual power consumption for heating

Climate zones
For heating mode, the EU is divided into three climate zones for calculation and classification purposes. This aims at calculating the energy efficiency taking into consideration the actual regional ambient temperatures.

■Climate Zones for Heating Mode

Reference climate zones for calculating the SCOP
Since the climate conditions have a great influence on the operating behaviour in the heat pump mode, three climate zones have been stipulated for the EU: warm, moderate, cold. The measurement points are homogenous at 12°C, 7°C, 2°C and –7°C.

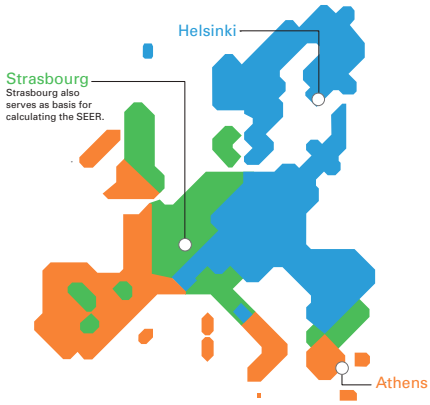

Warm (Athens)

Partial load	Temperature conditions Outdoors DB	Outdoors WB	Indoors DB
–	–	–	20°C
100%	2°C	1°C	20°C
64%	7°C	6°C	20°C
29%	12°C	11°C	20°C

Moderate (Strasbourg)

Partial load	Temperature conditions Outdoors DB	Outdoors WB	Indoors DB
88%	–7°C	–8°C	20°C
54%	2°C	1°C	20°C
35%	7°C	6°C	20°C
15%	12°C	11°C	20°C

Cold (Helsinki)

Partial load	Temperature conditions Outdoors DB	Outdoors WB	Indoors DB
61%	–7°C	–8°C	20°C
37%	2°C	1°C	20°C
24%	7°C	6°C	20°C
11%	12°C	11°C	20°C

SEER/SCOP

Air conditioning systems were previously assessed using the energy-efficiency rating (EER), which evaluated efficiency in cooling mode, and the coefficient of performance (COP), which defined the efficiency, or the ratio of consumed and output power, in heating mode. Under this system, assessments were not truly reflective of performance as they were based on a single measurement point, which led to manufacturers optimising products accordingly in order to achieve higher efficiency ratings. SEER and SCOP address this problem by including seasonal variation in the ratings via use of realistic measurement points. For cooling mode, measurements at outside temperatures of 20, 25, 30 and 35°C are incorporated and weighted in accordance with climate data for Strasbourg, which is used as a single reference point for the whole EU. For instance, for partial-load operation, which represents more than 90% of operation, there is a correspondingly high weighting for the efficiency classification. For heating mode, a comprehensive temperature profile for the whole EU was not possible, so the EU has been divided into three climate zones, north, central and south, and load profiles created. The same measurement points, at outside temperatures of 12, 7, 2 and –7°C, are used for all three zones.

■SCOP Calculation

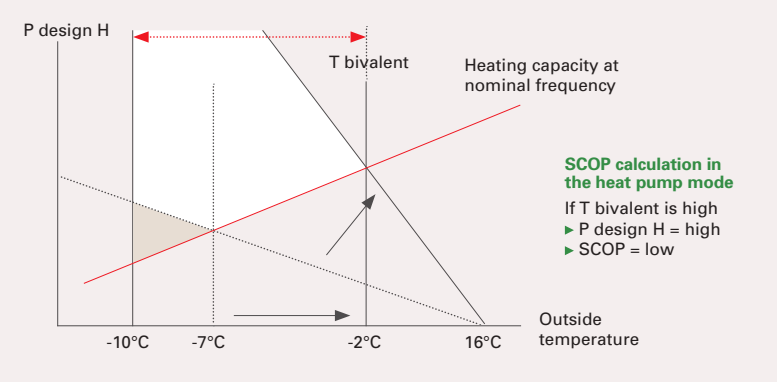

Technical Terms with Respect to the SCOP

P design H: Corresponds to a heating load of 100%. The value depends on the selected bivalence point.

T design: Outside temperature which determines the P design H point. The latter is determined from the area conditions.

T bivalent: Corresponds to the lowest temperature at which full heating performance can be achieved with the heat pump (without additional heating). This point can be freely selected within the prescribed temperature ranges (T design - T bivalent).

SOUND PRESSURE LEVEL

Consumers will also receive more information on the noise levels emitted by split-system air conditioners to help them make their purchasing decision. Specifically, the sound power level of indoor and outdoor units is to be indicated in decibels as an objective parameter. Knowing the sound power makes it possible to calculate sound emissions while considering distance and radiation characteristics, which is beneficial because it allows the noise levels of different air conditioning systems to be compared regardless of the usage location and how the sound pressure is measured. This is an improvement on sound pressure values which are usually measured at an approximate distance of 1m where all modern split-system air conditioning systems tend to be very quiet at an average of 21 decibels.

■Sound Pressure vs Sound Power Level

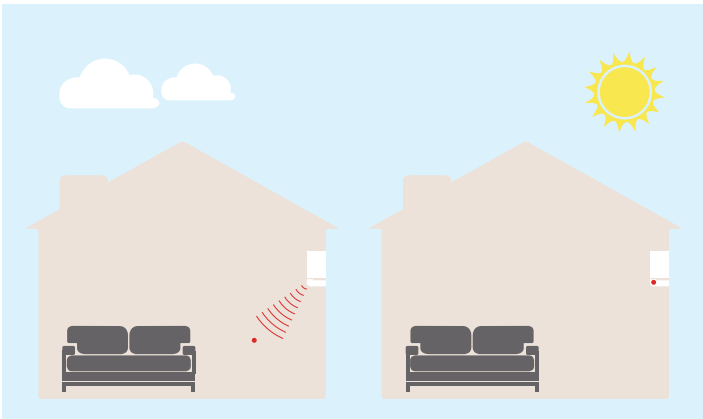

Sound pressure level dB(A)
The sound pressure level is a sound field parameter which indicates the perceived operating noise of an indoor unit within a certain distance.

Sound power level dB(A)
The sound power is an acoustic parameter which describes the source strength of a sound generator and is thus independent of the distance to the receiver location.

DC Inverter INVERTER TECHNOLOGIES

Mitsubishi Electric inverters ensure superior performance including the optimum control of operation frequency. As a result, optimum power is applied in all heating/cooling ranges and maximum comfort is achieved while consuming minimal energy. Fast, comfortable operation and amazingly low running cost — That's the Mitsubishi Electric promise.

INVERTERS — HOW THEY WORK

Inverters electronically control the electrical voltage, current and frequency of electrical devices such as the compressor motor in an air conditioner. They receive information from sensors monitoring operating conditions, and adjust the revolution speed of the compressor, which directly regulates air conditioner output. Optimum control of operation frequency results in eliminating the consumption of excessive electricity and providing the most comfortable room environment.

ECONOMIC OPERATION

Impressively low operating cost is a key advantage of inverter air conditioners. We've combined advanced inverter technologies with cutting-edge electronics and mechanical technologies to achieve a synergistic effect that enables improvements in heating/cooling performance efficiency. Better performance and lower energy consumption are the result.

TRUE COMFORT

Below is a simple comparison of air conditioner operation control with and without an inverter.

■ Inverter operation comparison

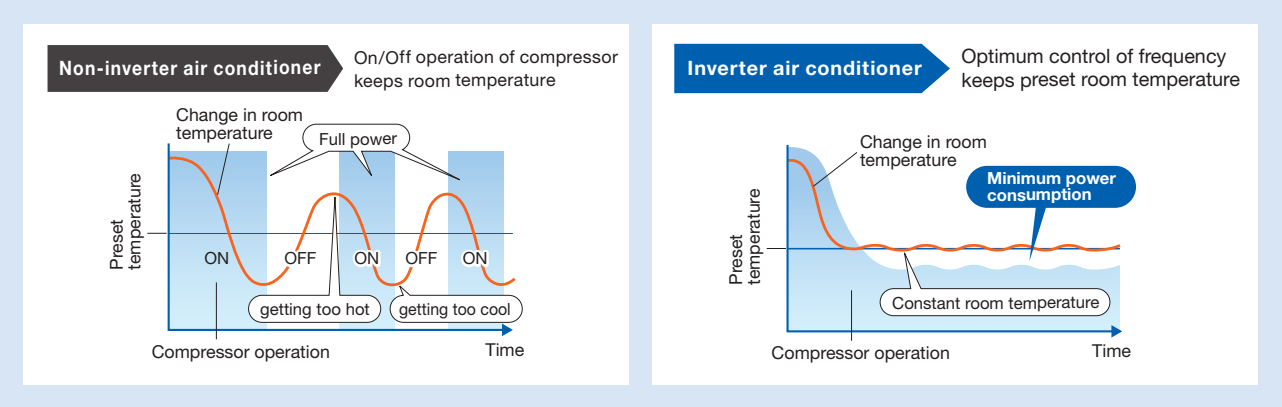

The compressors of air conditioners without an inverter start and stop repeatedly in order to maintain the preset room temperature. This repetitive on/off operation uses excessive electricity and compromises room comfort. The compressors of air conditioners equipped with an inverter run continuously; the inverter quickly optimizing the operating frequency according to changes in room temperature. This ensures energy-efficient operation and a more comfortable room.

Point 1 Quick & Powerful

Increasing the compressor motor speed by controlling the operation frequency ensures powerful output at start-up, brings the room temperature to the comfort zone faster than units not equipped with an inverter. Hot rooms are cooled, and cold rooms are heated faster and more efficiently.

Point 2 Room Temperature Maintained

The compressor motor operating frequency and the change of room temperature are monitored to calculate the most efficient waveform to maintain the room temperature in the comfort zone. This eliminates the large temperature swings common with non-inverter systems, and guarantees a pleasant, comfortable environment.

KEY TECHNOLOGIES

Our Rotary Compressor

Our rotary compressors use our original "Poki-Poki Motor" and "Heat Caulking Fixing Method" to realise downsizing and higher efficiency, and are designed to match various usage scenes in residential to commercial applications. Additionally, development of an innovative production method known as "Divisible Middle Plate" realises further size/weight reductions and increased capacity while also answering energy-efficiency needs.

Our Scroll Compressor

Our scroll compressors are equipped with an advanced frame compliance mechanism that allows self-adjustment of the position of the orbiting scroll according to pressure load and the accuracy of the fixed scroll position. This minimises gas leakage in the scroll compression chamber, maintains cooling capacity and reduces power loss.

MORE ADVANTAGES WITH MITSUBISHI ELECTRIC

Joint Lap DC Motor

Mitsubishi Electric has developed a unique motor, called the "Poki-Poki Motor" in Japan, which is manufactured using a joint lapping technique. This innovative motor operates based on a high-density, high-magnetic force, leading to extremely high efficiency and reliability.

Magnetic Flux Vector Sine Wave Drive

This drive device is actually a microprocessor that converts the compressor motor's electrical current waveform from a conventional waveform to a sine wave (180°conductance) to achieve higher efficiency by raising the motor winding utilisation ratio and reducing energy loss.

Reluctance DC Rotary Compressor

Powerful neodymium magnets are used in the rotor of the reluctance DC motor. More efficient operation is realised by strong magnetic and reluctance torques produced by the magnets.

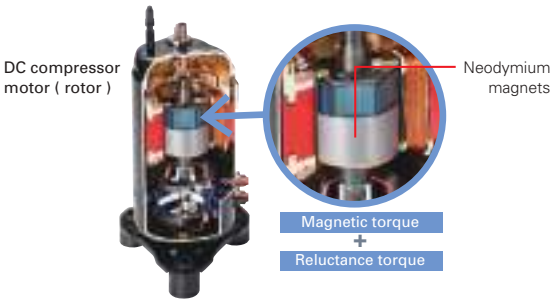

Highly Efficient DC Scroll Compressor

Higher efficiency has been achieved by adding a frame compliance mechanism to the DC scroll compressor. The mechanism allows movement in the axial direction of the frame supporting the cradle scroll, thereby greatly reducing leakage and friction loss, and ensuring extremely high efficiency at all speeds.

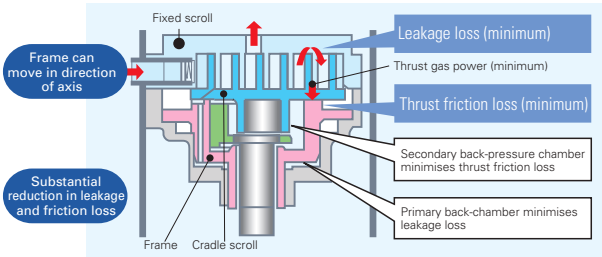

Heat Caulking Fixing Method

To fix internal parts in place, a "Heat Caulking Fixing Method" is used, replacing the former arc spot welding method. Distortion of internal parts is reduced, realising higher efficiency.

DC Fan Motor

A highly efficient DC motor drives the fan of the outdoor unit. Efficiency is much higher than an equivalent AC motor.

Vector-Wave Eco Inverter

This inverter monitors the varying compressor motor frequency and creates the most efficient waveform for the motor speed. As the result, operating efficiency in all speed ranges is improved, less power is used and annual electricity cost is reduced.

Smooth wave pattern

Inverter size has been reduced using insert-molding, where the circuit pattern is molded into the synthetic resin. To ensure quiet operation, soft PWM control is used to prevent the metallic whine associated with conventional inverters.

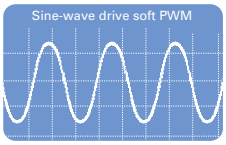

PAM (Pulse Amplitude Modulation)

PAM is a technology that controls the current waveform so that it resembles the supply voltage wave, thereby reducing loss and realising more efficient use of electricity. Using PAM control, 98% of the input power supply is used effectively.

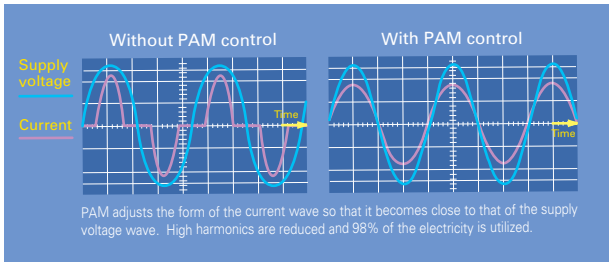

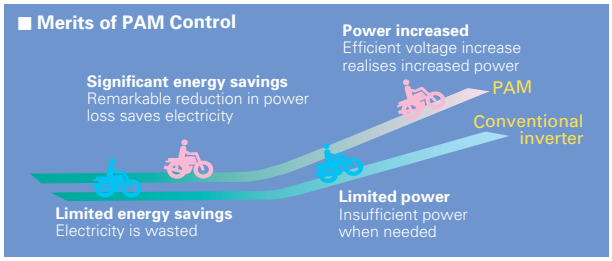

Power Receiver and Twin LEV Control

Mitsubishi Electric has developed a power receiver and twin linear expansion valves (LEVs) circuit that optimise compressor performance. This technology ensures optimum control in response to operating waveform and outdoor temperature. Operating efficiency has been enhanced by tailoring the system to the characteristics of R410A refrigerant.

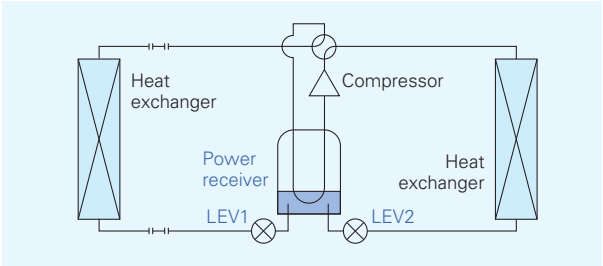

Grooved Piping

High-performance grooved piping is used in heat exchangers to increase the heat exchange area.

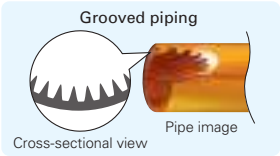

COMFORT

3D i-see Sensor

3D i-see Sensor for M SERIES

The LN Series and FH Series are equipped with the 3D i-see Sensor, an infrared-ray sensor that measures the temperature at distant positions. While moving to the left and right, eight vertically arranged sensor elements analyze the room temperature in three dimensions. This detailed analysis makes it possible to judge where people are in the room, thus allowing creation of features such as "Indirect airflow," to avoid airflow hitting people directly, and "direct airflow" to deliver airflow to where people are.

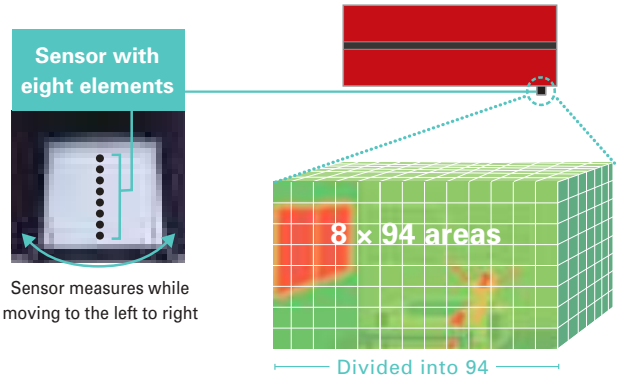

(Image)

No occupancy energy-saving mode

The sensors detect whether there are people in the room. When no-one is in the room, the unit automatically switches to energy-saving mode.

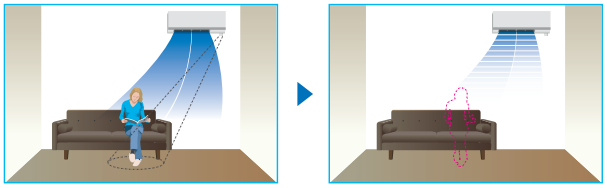

The "3D i-see Sensor" detects people's absence and the power consumption is automatically reduced approximately 10% after 10 minutes and 20% after 60 minutes.

Indirect Airflow

The indirect airflow setting can be used when the flow of air feels too strong or direct. For example, it can be used during cooling to avert airflow and prevent body temperature from becoming excessively cooled.

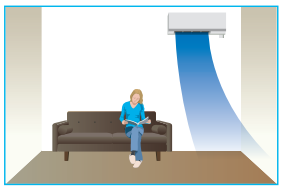

Direct Airflow

This setting can be used to directly target airflow at people such as for immediate comfort when coming indoors on a hot (cold) day.

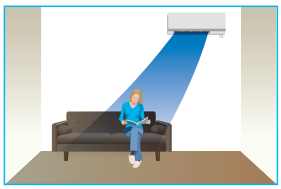

Even Airflow *LN Series only

Normal swing mode

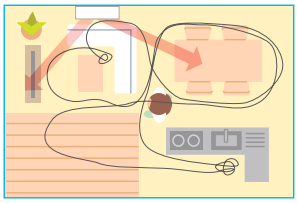

The airflow is distributed equally throughout the room, even to spaces where there is no human movement.

Even airflow mode

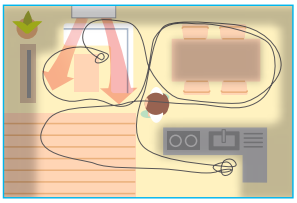

The 3D i-see sensor memorizes human movement and furniture positions, and efficiently distributes airflow.

No occupany Auto-OFF mode *LN Series only

The sensors detect whether or not there are people in the room. When there is no one in the room, the unit turns off automatically.

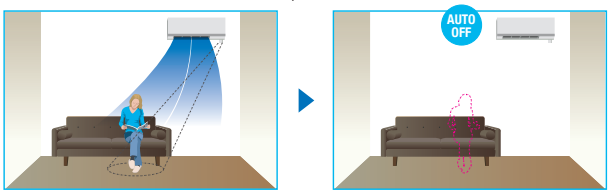

3D i-see Sensor for S & P SERIES

Detects number of people

The 3D i-see Sensor detects the number of people in the room and adjusts the power accordingly. This makes automatic power-saving operation possible in places where the number of people changes frequently. Additionally, when the area is continuously unoccupied, the system switches to a more enhanced power-saving mode. Depending on the setting, it can also stop the operation.

Detects people's position

Once a person is detected, the angle of the vane is automatically adjusted. Each vane can be indenpendently set to "Direct Airflow" or "Indirect Airflow" according to taste.

Highly accurate people detection

A total of eight sensors rotate a full 360° in 3-minute intervals. In addition to detecting human body temperature, our original algorithm also detects people's positions and the number of people.

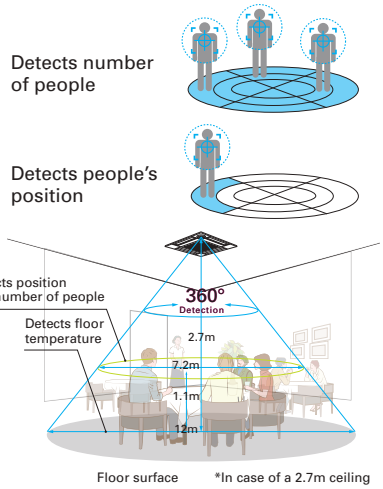

Detects number of people

Room occupancy energy-saving mode

The 3D i-see Sensor detects the number of people in the room. It then calculates the occupancy rate based on the maximum number of people in the room up to that point in time in order to save air-conditioning power. When the occupancy rate is approximately 30%, air-conditioning power equivalent to 1°C during both cooling and heating operation is saved. The temperature is controlled according to the number of people.

No occupancy energy-saving mode

When 3D i-see Sensor detects that no one is the room, the system is switched to a pre-set power-saving mode. If the room remains unoccupied for more than 60min, air-conditioning power equivalent to 2°C during both cooling and heating operation is saved. This contributes to preventing waste in terms of heating and cooling.

No occupancy Auto-OFF mode*

When the room remains unoccupied for a pre-set period of time, the air conditioner turns off automatically, thereby providing even greater power savings. The time until operation is stopped can be set in intervals of 10min, ranging from 60 to 180 min.

* When MA Remote Controller is used to control multiple refrigerant systems, "No occupancy Auto-OFF mode" cannot be used.

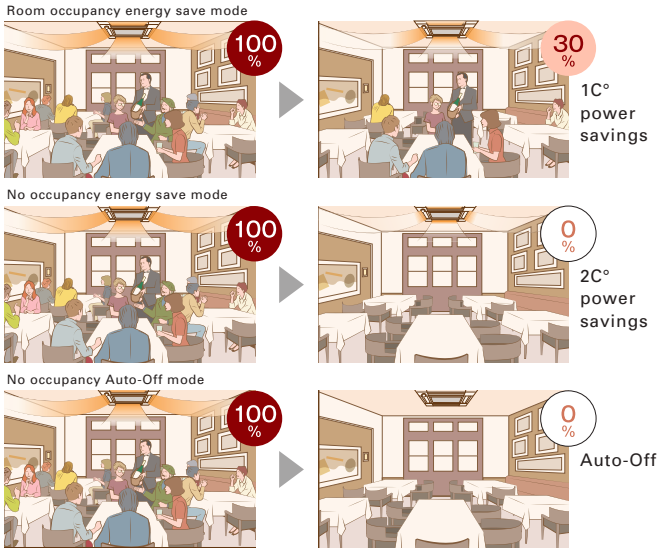

*PAR-40MAA is required for each setting

Detects people's position

Direct/Indirect settings*

The horizontal airflow spreads across the ceiling. When set to "Indirect Airflow" uncomfortable drafty-feeling is eliminated completely!

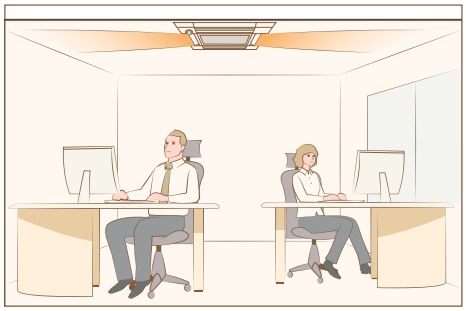

*PAR-40MAA or PAR-SL100A-E is required for each setting.

Seasonal airflow*

When cooling
Saves energy while keeping a comfortable effective temperature by automatically switching between ventilation and cooling. When a pre-set temperature is reached, the air conditioning unit switches to swing fan operation to maintain the effective temperature. This clever function contributes to keeping a comfortable coolness.

When heating
The air conditioning unit automatically switches between circulator and heating. Wasted heat that accumulates near the ceiling is reused via circulation. When a pre-set temperature is reached the air conditioner switches from heating to circulator and blows air in the horizontal direction. It pushes down the warm air that has gathered near the ceiling to people's height, thereby providing smart heating.

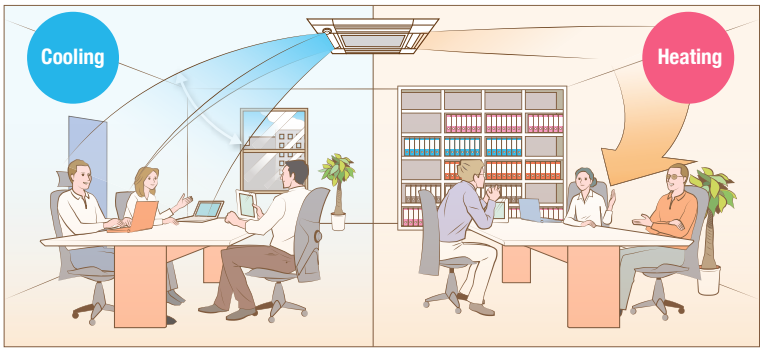

*PAR-40MAA is required for each setting.

Area Temperature Monitor

The "3D i-see Sensor" monitors the whole room in sections and directs the airflow to areas of the room where the temperature does not match the temperature setting. (When cooling the room, if the middle of the room is detected to be hotter, more airflow is directed towards it.) This eliminates unnecessary heating /cooling and contributes to lower electricity costs.

Cooling mode

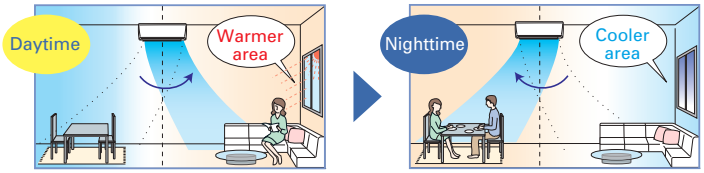

COMFORT

ENERGY-SAVING

Econo Cool Energy-Saving Feature

"Econo Cool" is an intelligent temperature control feature that adjusts the amount of air directed towards the body based on the air-outlet temperature. The setting temperature can be raised by as much as 2°C without any loss in comfort, thereby realising a 20% gain in energy efficiency. *(Function only available during manual cooling operation.)*

	Conventional	Econo Cool
Ambient temperature	35°C	35°C
Set temperature	25°C	27°C
Perceived temperature	30°C	29.3°C

Econo Cool Mode
A comfortable room environment is maintained even when setting the temperature 2°C higher than the conventional cooling mode.

Econo Cool on

Conventional cooling mode

Temperature distribution (°C)

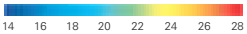

Demand Function (Onsite Adjustment)

The demand function can be activated when the unit is equipped with a commercially available timer or an On/Off switch is added to the CNDM connector (option) on the control board of the outdoor unit. Energy consumption can be reduced up to 100% of the normal consumption according to the signal input from outside.

[Example: Power Inverter Series]
Limit energy consumption by changing the settings of SW7-1, SW2 and SW3 on the control board of the outdoor unit. The following settings are possible.

SW7-1	SW2	SW3	Energy consumption
ON	OFF	OFF	100%
	ON	OFF	75%
	ON	ON	50%
	OFF	ON	0% (Stop)

*PUHZ outdoor only

AIR QUALITY

Plasma Quad Plus

Plasma Quad Plus is a plasma-based filter system similar to Plasma Quad, but in addition to bacteria, viruses, allergens, and dust, it can also filter out microparticles such as PM2.5.

Plasma Quad

Plasma Quad attacks bacteria and viruses from inside the unit using a strong curtain-like electrical field and discharge of electric current across the whole inlet-air opening of the unit.

Dual Barrier Coating

A two-barrier coating which prevents hydrophobic and hydrophillic dirt from sticking to the inner surface and inner parts of the indoor unit.

Fresh-air Intake

Indoor air quality is enhanced by the direct intake of fresh exterior air.

High-efficiency Filter

This high-performance filter has a much finer mesh compared to standard filters, and is capable of capturing minute particulates floating in the air that were not previously caught.

Air Purifying Filter

The filter has a large capture area and also generates antibacterial, antifungal, and deodorant effects.

Oil Mist Filter

The oil mist filter prevents oil mist from penetrating into the inner part of the air conditioner.

Long-life Filter

A special process for the entrapment surface improves the filtering effect, making the maintenance cycle longer than that of units equipped with conventional filters.

Filter Check Signal

Air conditioner operating time is monitored, and the user is notified when filter maintenance is necessary.

Silver-ionized Air Purifier Filter

Silver-ionized Air Purifier Filter made of non-woven fabric can capture tiny particles. Silver ions and enzymes contained in the filter effectively act on bacteria and allergens and neutralises them.

AIR DISTRIBUTION

Double Vane

Double vane separates the airflow in the different directions to deliver airflow not only across a wide area of the room, but also simultaneously to two people in different locations.

Horizontal Vane

The air outlet vane swings up and down so that the airflow is spread evenly throughout the room.

Vertical Vane

The air outlet fin swings from side to side so that the airflow reaches every part of the room.

High Ceiling Mode

In the case of rooms with high ceilings, the outlet-air volume can be increased to ensure that air is circulated all the way to the floor.

Low Ceiling Mode

If the room has a low ceiling, the airflow volume can be reduced for less draft.

Auto Fan Speed Mode

The airflow speed mode adjusts the fan speed of the indoor unit automatically according to the present room conditions.

Circulator Mode

After reaching the target temperature, heating mode will automatically switch to circulator mode, which makes the unit go into "fan-only" state and mixes warm air to eliminate uneven temperature in the room.

CONVENIENCE

CONVENIENCE

"i save" Mode

"i save" is a simplified setting function that recalls the preferred (preset) temperature by pressing a single button on the remote controller. Press the same button twice in repetition to immediately return to the previous temperature setting.
Using this function contributes to comfortable waste-free operation, realising the most suitable air conditioning settings and saving on power consumption when, for example, leaving the room or going to bed.

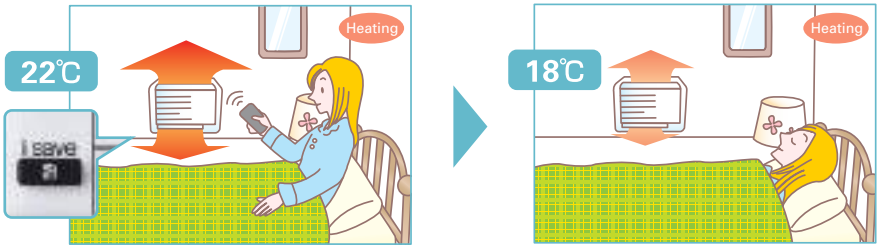

✻ Temperature can be preset to 10°C when heating in the "i-save" mode.

Auto Changeover

The air conditioner automatically switches between heating and cooling modes to maintain the desired temperature.

Low-temperature Cooling

Intelligent fan speed control in the outdoor unit ensures optimum performance even when the outside temperature is low.

Ampere Limit Adjustment

Dip switch settings can be used to adjust the maximum electrical current for operation. This function is highly recommended for managing energy costs.

*Maximum capacity is lowered with the use of this function.

Operation Lock (Indoor unit)

To accommodate specific-use applications, cooling or heating operation can be specified using the wireless remote controller. A convenient option when a system needs to be configured for exclusive cooling or heating service.

Operation Lock (Outdoor unit)

To accommodate specific-use applications, cooling or heating operation can be specified when setting the control board of the outdoor unit. A convenient option when a system needs to be configured for exclusive cooling or heating service.

Auto Restart

Especially useful at the time of power outages, the unit turns back on automatically when power is restored.

10°C Heating

During heating operation, the temperature can be set in 1°C increments down to 10°C.

■ Dip Switch Setting (Board for MXZ-5E102)

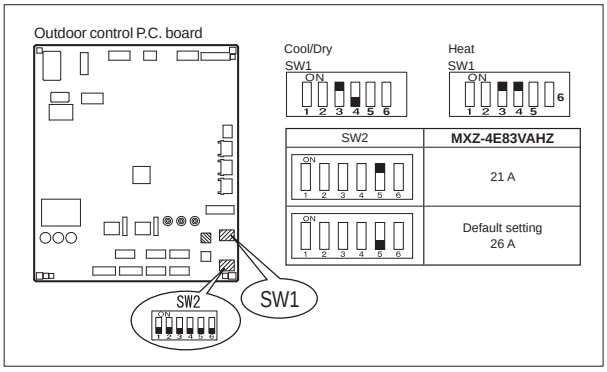

Night Mode

When Night Mode is activated using the wireless remote controller, it will switch to the settings described below.

- The brightness of the operation indicator lamp will become dimmer.
- The beeping sound will be disabled.
- The outdoor operating noise will drop to 3dB lower than the rated specification operating noise.

*The cooling/heating capacity may drop.

Low-noise Operation (Outdoor Unit)

System operation can be adjusted to prioritise less noise from the outdoor unit over air conditioning performance.

On/Off Operation Timer

Use the remote controller to set the times of turning the air conditioner On/Off.

Built-in Weekly Timer Function

Easily set desired temperatures and operation ON/OFF times to match lifestyle patterns. Reduce wasted energy consumption by using the timer to prevent forgetting to turn off the unit and eliminate temperature setting adjustments.

■ Example Operation Pattern (Winter/Heating mode)

	Mon.	Tues.	Wed.	Thurs.	Fri.	Sat.	Sun.
6:00	ON 20°C	ON 20°C	ON 20°C	ON 20°C	ON 20°C	ON 20°C	ON 20°C
8:00	Automatically changes to high-power operation at wake-up time						
10:00	OFF	OFF	OFF	OFF	OFF	ON 18°C	ON 18°C
12:00	Automatically turned off during work hours					Midday is warmer, so the temperature is set lower	
14:00							
16:00							
18:00	ON 22°C	ON 22°C	ON 22°C	ON 22°C	ON 22°C	ON 22°C	ON 22°C
20:00	Automatically turns on, synchronized with arrival at home					Automatically raises temperature setting to match time when outside-air temperature is low	
22:00							
(during sleeping hours)	ON 18°C	ON 18°C	ON 18°C	ON 18°C	ON 18°C	ON 18°C	ON 18°C
	Automatically lowers temperature at bedtime for energy-saving operation at night						

Settings

Pattern Settings: Input up to four settings for each day

Settings: •Start/Stop operation •Temperature setting ✻The operation mode cannot be set.

■ Easy set-up using dedicated buttons

The remote controller is equipped with buttons that are used exclusively for setting the Weekly Timer. Setting operation patterns is easy and quick.

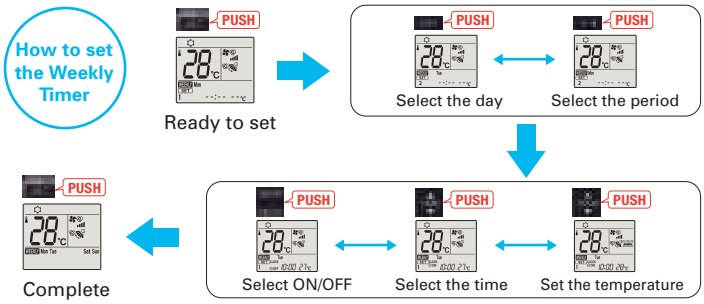

- Start by pushing the "SET" button and follow the instructions to set the desired patterns. Once all of the desired patterns are input, point the top end of the remote controller at the indoor unit and push the "SET" button one more time. (Push the "SET" button only after inputting all of the desired patterns into the remote controller memory. Pushing the "CANCEL" button will end the set-up process without sending the operation patterns to the indoor unit).
- It takes a few seconds to transmit the Weekly Timer operation patterns to the indoor unit. Please continue to point the remote controller at the indoor unit until all data has been sent.

Back Light Remote Controller

Not only the indoor units, but the wireless remote controllers come in four colours as well. Each remote controller matches the indoor unit. Even the textures are the same.

The setting can be easily checked in the dark.

INSTALLATION & MAINTENANCE

INSTALLATION

Cleaning-free Pipe Reuse

It is possible to reuse the same piping. It allows cleaning-free renewal of air conditioning systems that use R22 or R410 refrigerant.

Reuse of Existing Wiring

Wiring recycling problem solved! Compatible with other wiring connection methods*

The wiring method has been improved, making it possible to use methods different from that utilized for control and power supply. Units are compatible with the dual harness control line/power line method and the separate power supply method. Using a power supply terminal kit, wire can be efficiently reused at the time of system renewal regardless of the method the existing system uses.

* Optional. Usage may be limited due to wiring type diameter.

Single Harness Control/Power Line Method (Current method)

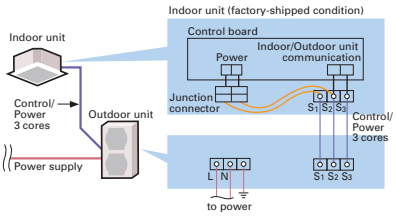

Dual Harness Control Line/Power Line Method

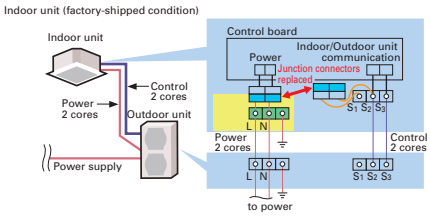

Separate Power Supply Method

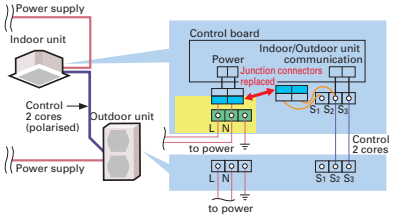

Wiring/Piping Correction Function*

The push of a single button is all that is required to confirm that piping and wiring are properly connected. Corrections are made automatically if a wiring error is detected, eliminating the need for complicated wiring confirmation work when expanding the number of rooms served.

* This function cannot be used when the outdoor temperature is below 0°C.
The correction process requires 10–20 minutes, and only works when the unit is set to the Cooling mode.

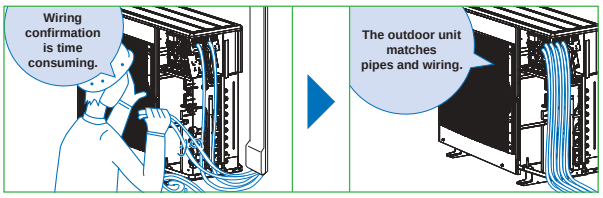

Drain Pump

A built-in drain pump enables drain piping to be raised.

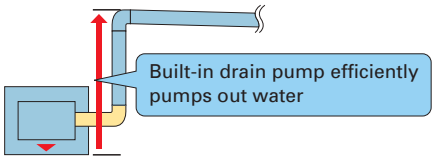

Flare Connection

Flare connection to cooling pipe work is possible.

Pump Down Switch

Enables smooth and easy recovery of refrigerant. Simply press the "Pump Down" switch before moving or changing the unit.

Outdoor unit control circuit board

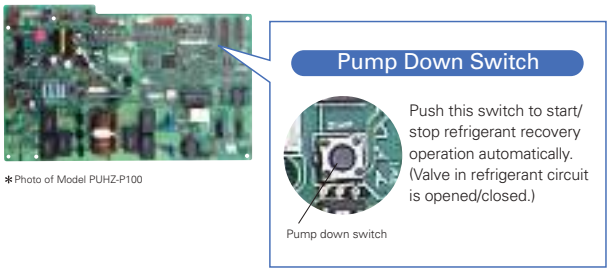

* Photo of Model PUHZ-P100

MAINTENANCE

Self-Diagnostic Function (Check Code Display)

Check codes are displayed on the remote controller or the operation indicator to inform the user of malfunctions detected.

Failure Recall Function

Operation failures are recorded, allowing confirmation when needed.

SYSTEM CONTROL

SYSTEM CONTROL

PAR-40MAA/PAC-YT52CRA/PAC-CT01MAA

Units are compatible for use with the PAR-40MAA, PAC-YT52CRA or PAC-CT01MAA remote controller, which has a variety of management functions.

COMPO (Simultaneous Multi-unit Operation)

Multiple indoor units can be connected to a single outdoor unit. (Depending on the unit combination, connection of up to four units is possible; however, all indoor units must operate at the same settings.)

System Group Control

The same remote controller is capable of controlling the operational status of up to 16 refrigerant systems.

MXZ Connection

Connection to the MXZ multi-split outdoor unit is possible.

M-NET Connection

Units can be connected to MELANS system controllers (M-NET controllers) such as the AG-150A.

MELCloud (Wi-Fi interface)

MELCloud for fast, easy remote control and monitoring

MELCloud is a Cloud-based solution for controlling air-conditioner either locally or remotely by computer, tablet or smartphone via the Internet. Setting up and remotely operating via MELCloud is simple and straight forward. All you need is wireless computer connectivity in your home or the building where the air-conditioner is installed and an Internet connection on your mobile or fixed terminal. To set up the system, the router and the Wi-Fi interface must be paired, and this is done simply and quickly using the WPS button found on all mainstream routers.
You can control and check air-conditioner via MELCloud from virtually anywhere an Internet connection is available.
That means, thanks to MELCloud, you can use much more easily and conveniently.

Key control and monitoring features

1. **Turn system on/off**
2. **See status of operating & adjust set point**
3. **Live weather feed from your location**
   Schedule timer - Set 7 day weekly schedule
   Error status
4. **Energy Consumption Monitoring**

MELCloud™

MELCloud uses the MAC-567IF-E interface

Connecting the Wi-Fi interface

The new Wi-Fi interface MAC-567IF-E can be mounted on the wall or on the outer side of the indoor unit.
For LN Series, there is a built-in Wi-Fi interface inside the indoor unit.

When mounting on the wall

The interface can be mounted simply by affixing the holder to the wall on either side of the unit and inserting the interface unit into the holder.

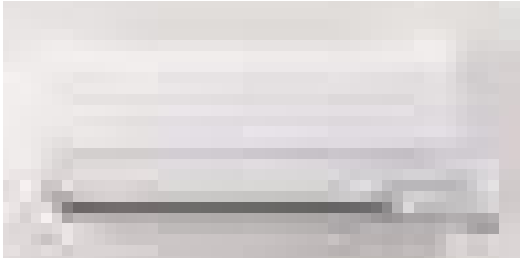

*When mounting on the right side of the unit

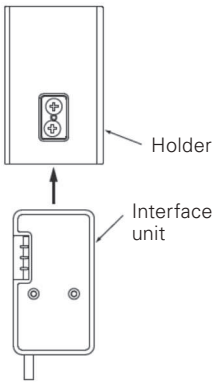

When mounting on the outer side of the unit

The interface can be mounted on the right side, left side, bottom right, or bottom left of the indoor unit. After inserting the clip into the holder, slip the clip over the edge of the corner box.

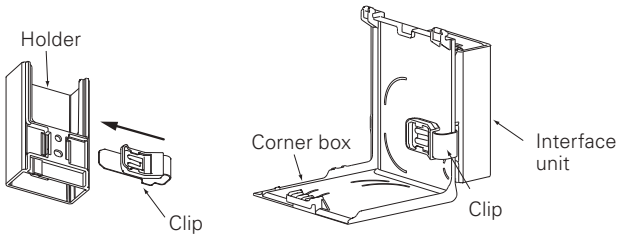

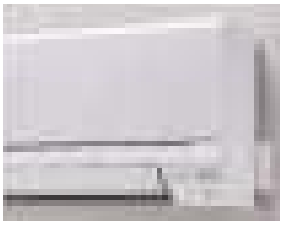

Right side

Bottom right

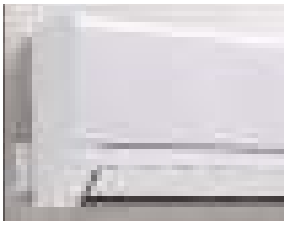

Left side

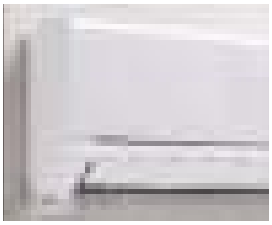

Bottom left

CONTROL TECHNOLOGIES

User-friendly Deluxe Remote Controller with Excellent Operability and Visibility

PAR-40MAA

Easy To Read & Easy To Use

Inverted display screen

The screen background color can be set to black to suit the atmosphere of the installation location.

Full Dot Liquid-crystal Display Adopted

Easier to read thanks to use of a full dot liquid-crystal display with backlight, and easier to use owing to adopting a menu format that has reduced the number of operating buttons.

Display Example [Operation Mode]

Full Dot LCD

Multi-language Display

Multi-language

Control panel operation in fourteen different languages

Choose the desired language, among the following languages.

English	Spanish	Italian	Turkish
French	Greek	Portuguese	Swedish
German	Russian	Polish	Czech
Hangarian	Dutch		

Temperature Control

Dual Set Point

Two preset temperatures

When the operation mode is set to the Auto (Dual Set Point) mode, two preset temperatures (one each for cooling and heating) can be set. Depending on the room temperature, indoor unit will automatically operate in either the COOL or HEAT mode and keep the room temperature within the preset range.

Operation pattern during Auto (Dual Set Point) mode

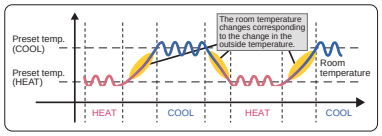

*Please refer to the function list on pages 193-200 for the combination of the available units.

Energy-efficient Control

Operation Control Functions

Energy-saving Schedule

Precise control of power consumption

The amount of power consumed in each time period is managed so that the demand value is not exceeded. The demand control function can be set to start and finish in 5-minute units. Additionally, the level can be adjusted to 0, 50, 60, 70, 80 or 90% of maximum capacity, and up to 4 patterns can be set per day. Air-conditioning operation is automatically controlled to ensure that electricity in excess of the contracted volume is not consumed.

■Setting pattern example

Start time		Finish time	Capacity savings
8:15	→	12:00	80%
12:00	→	13:00	50%
13:00	→	17:00	90%
17:00	→	21:00	50%

Auto-return

Prevents wasteful operation by automatically returning to the preset temperature after specified operating time

After adjusting the temperature for initial heating in winter or cooling on a hot summer day, it is easy to forget to return the temperature setting to its original value. The Auto-return function automatically resets the temperature back to the original setting after a specified period of time, thereby preventing overheating/overcooling. The Auto-return activation time can be set in 10-minute units, in a range between 30 and 120 minutes.

*Auto-return cannot be used when Temperature Range Restrictions is in use.

Auto-off Timer

Turns heating/cooling off automatically after preset time elapses

When using Auto-off Timer, even if one forgets to turn off the unit, operation stops automatically after the preset time elapses, thereby preventing wasteful operation. Auto-off Timer can be set in 10-minute units, in a range between 30 minutes and 4 hours. Eliminates all anxiety about forgetting to turn off the unit.

Recommended for: Meeting room, Changing room

Night Setback

Keep desired room temperatures automatically

This function monitors the room temperature and automatically activates the heating mode when the temperature drops below the preset minimal temperature setting. It has the same function for cooling, automatically activating the cooling mode when the temperature rises above the preset maximum temperature setting.

Operation Lock

Fixed temperature setting promotes energy savings

In addition to operation start/stop, the operation mode, temperature setting and airflow direction can be locked. Unwanted adjustment of temperature settings is prevented and an appropriate temperature is constantly maintained, leading to energy savings. This feature is also useful in preventing erroneous operation or tampering.

Recommended for: Office, School, Public hall, Hospital, Computer server facility

Temperature Range Restriction

Temperature Range Restriction prevents overheating/overcooling

Using a temperature that is 1°C lower/higher for heating/cooling results in a 10% reduction in power consumption.* Temperature Range Restriction limits the maximum and minimum temperature settings, contributing to the prevention of overheating/overcooling.

*In-house calculations

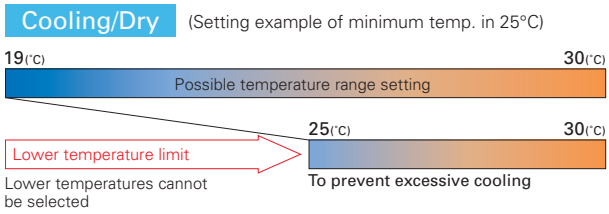

Recommended for: Office, Restaurant

Weekly Timer

Weekly Timer with Two Types of Settings

Weekly schedule timer can save two different settings which can be easily switched according to different seasons.
In addition, it offers eight different pattern setting per day. (on, off and temperature setting)

*Weekly Timer cannot be used when On/Off Timer is in use.

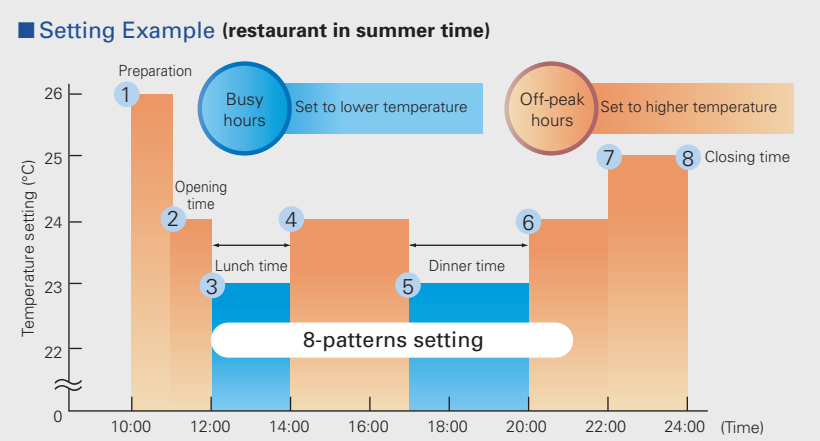

CONTROL TECHNOLOGIES

Installation/Maintenance Support Functions

Smooth Maintenance

Outdoor unit data accessed immediately, enabling fast maintenance (only PUZ/PUHZ type)

Using the Stable Operation Control (fixed frequency) of the Smooth Maintenance function, the operating status of the inverter can be checked easily via the screen on the remote controller.

■ Smooth Maintenance Function Operating Procedure

Display information (11 items)

Compressor			
①	COMP. current (A)	⑥	OU TH4 temp. (°C)
②	COMP. run time (Hr)	⑦	OU TH6 temp. (°C)
③	COMP. ON/OFF (times)	⑧	OU TH7 temp. (°C)
④	COMP. frequency (Hz)	Indoor Unit	
Outdoor Unit		⑨	IU air temp. (°C)
⑤	Sub cool (°C)	⑩	IU HEX temp. (°C)
		⑪	IU filter operating time* (Hr)

*IU filter operating time is the time elapsed since filter was reset.

Inspection Guidelines

The computed temperature difference is plotted as in the graph below and operating status is determined.

		Item
Cooling	Temp. difference	(⑥ OU TH4 temp.) – (⑦ OU TH6 temp.)
		(⑨ IU air temp.) – (⑩ IU HEX temp.)
Heating		(⑥ OU TH4 temp.) – (⑩ IU HEX temp.)
		(⑩ IU HEX temp.) – (⑨ IU air temp.)

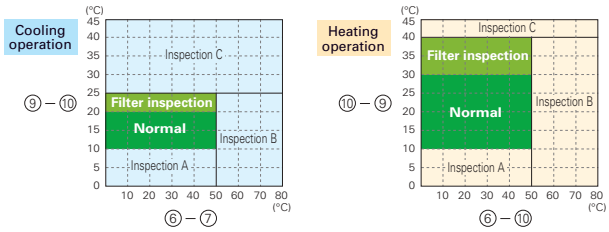

Result

Normal	Normal operating status.
Filter inspection	Filter may be blocked.*1
Inspection A	Capacity is reduced. Detailed inspection is necessary.
Inspection B	Refrigerant level is low.
Inspection C	Filter or indoor unit heat exchanger is blocked.

*1: Due to indoor and outdoor temperatures, "Filter inspection" may be displayed even if the filter is not blocked.

* The above graphs are based on trial data. Results may vary depending on installation/temperature conditions.

- Stable operation may not be possible under the following temperature conditions:
  a) In cooling mode when the outdoor induction temperature is over 40°C or the indoor induction temperature is below 23°C.
  b) In heating mode when the outdoor induction temperature is over 20°C or when the indoor induction temperature is over 25°C.
- If the above temperature conditions do not apply and stable operation is not achieved after 30 minutes has passed, please inspect the units.
- The operating status may change due to frost on the outdoor heat exchanger.

Manual Vane Angle Setting (4-way ceiling cassette)

Direction of vertical airflow for each vane can be set

Setting the vertical airflow direction for each individual vane can be performed simply via illustrated display. Seasonal settings such as switching between cooling and heating are easily changed as well.

Auto-descending Panel Operation

Easily raise/lower panels using the remote controller

Auto-descending panel operation is available as an option. Panels can be raise/lower using a button on the wired remote controller. Filter cleaning can be performed easily.

Silent Mode

Three outdoor noise level setting

The outdoor noise level can be reduced on demand according to the surrounding environment. Select from three setting mode: standard mode (rated), silent mode and ultra-silent mode.

Initial Password Setting

Password for initial settings

A password is required (default setting is "0000") for initial settings such as time and display language.

Rotation Back-up Rotation*, Back-up* and 2nd Stage Cut-in Functions* (PAR-40MAA)

(1) Rotation and Back-up Functions

Function Outline

- Main and sub units take turns operating according to a rotation interval setting.
- If one unit malfunctions, the other unit automatically begins operation (Back-up function)

*PUZ/PUHZ only

System Image

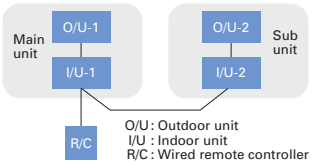

(2) 2nd Stage Cut-in Function

Function Outline

- Number of units operating is based on room temperature and predetermined settings.
- When room temperature rises above the desired setting, the standby unit starts (2-unit operation).
- When the room temperature falls 4°C below the predetermined setting, the standby unit stops (1-unit operation).

System Constraint

- This function is only available for rotation operation and when the back-up function is in cooling mode.

*PUZ/PUHZ only

Operation Pattern

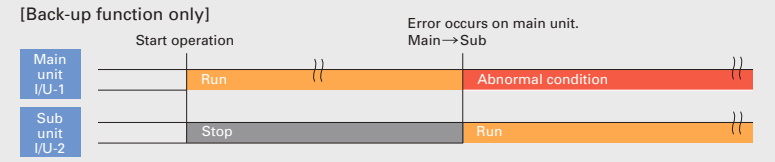

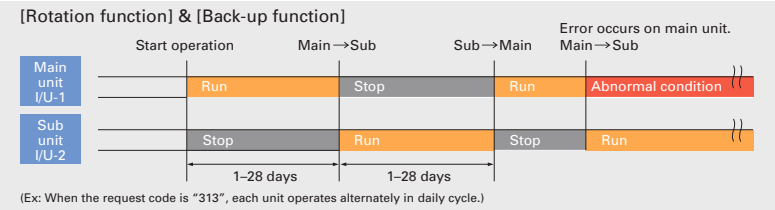

Operation Pattern

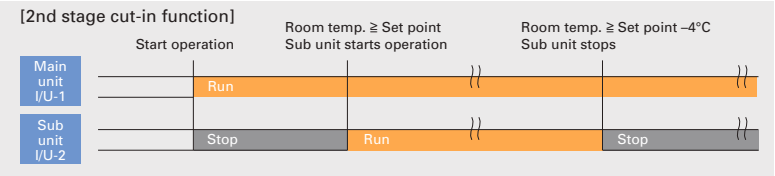

Simple MA Remote Controller
PAC-YT52CRA

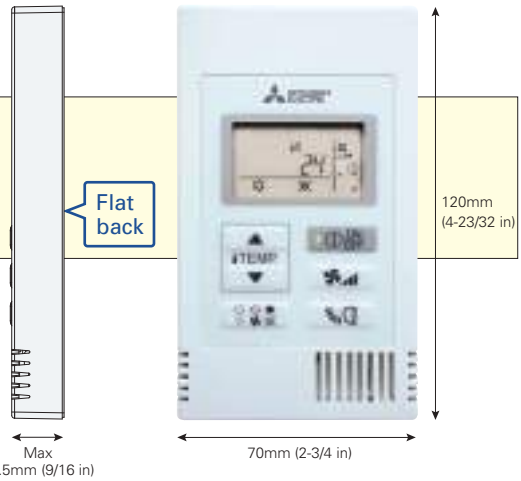

Backlit LCD

Features a liquid-crystal display (LCD) with backlight for operation in dark conditions.

Flat Back

The slim and flat-back shape makes installation easier without requiring a hole in the wall. Thickness is 14.5mm or less.

Vane Angle Setting

The vane button has been added to allow users to change the airflow direction (ceiling-cassette and wall-mounted units).

Pressing the button will switch the vane direction.

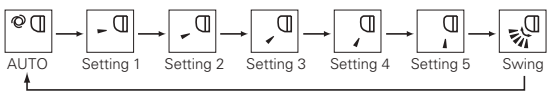

Dual Set Point

Two preset temperatures

When the operation mode is set to the Auto (Dual Set Point) mode, two preset temperatures (one each for cooling and heating) can be set. Depending on the room temperature, indoor unit will automatically operate in either the COOL or HEAT mode and keep the room temperature within the preset range.

Operation pattern during Auto (Dual Set Point) mode

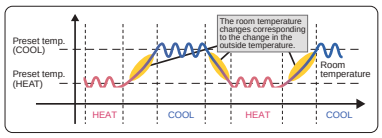

*Please refer to the function list on pages 193-200 for the combination of the available units.

* The settable vane directions vary depending on the indoor unit model to be connected.
* If the unit has no vane function, the vane direction cannot be set. In this case, the vane icon flashes when the button is pressed.

CONTROL TECHNOLOGIES

MA Touch Remote Controller
PAR-CT01MAA-SB
PAR-CT01MAA-PB

PAC-CT01MAA-SB

PAR-CT01MAA-PB

User-friendly
Visible big size icons on the full color touch panel display.

Full color touch panel display

Touch Panel

3.5 inch/HVGA Full Color LCD

Operation panels

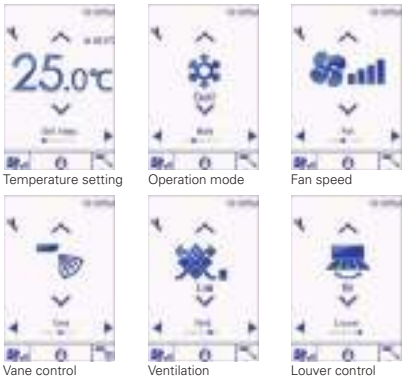

Flexibility
Customized display, color on parameter and background, editable parameter, logo image on the initial display.

Multiple color pattern
180 color patterns can be selected for control parameters or background on the display.

Control parameter customize
Users can customize the panel todisplay the selected parameters only.

● Control parameter customize
Simple operation panel is liked by users, especially in hotels. It is available to display only ON/OFF, set temp., fan speed.

Logo image customization
Logo image can be displayed on the initial screen.

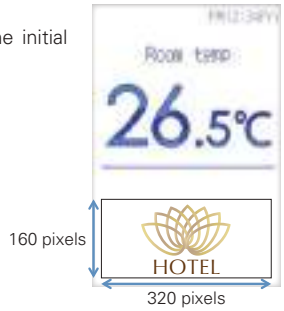

Available in a wide variety of colors to suit the decor of any room.

Expandability Smartphone / tablet App is available for setting, customize, and control.

Bluetooth® low energy technology

Remote controller can communicate with smartphone or tablet device via Bluetooth Low Energy (BLE). Operation & Setting App are available on the App store.

*The Bluetooth® word mark is trademark of Bluetooth SIG, Inc., USA.
*Contact the sales company for information on "Bluetooth" function.

<App screen image>

User App

Setting App

Convenient BLE transmission functions for installation contractors

Initial setup for the remote controller can be easily performed using BLE transmission via a smartphone.

● Previous model

Previously, initial setup (selecting function parameters) was onlyavailable via the remote controller installed each room.

● New model

The initial setup (selecting function parameters) can now be performed in advance on a smartphone, with the settings transmitted to the remote controller by enabling BLE transmission upon entry to the room.

Convenient BLE transmission functions for guests

The remote controller has been further upgraded with hotels in mind, to allow smartphone connectivity and multilingual support.

Smartphone connectivity

For example, hotel guests can operate the air conditioner via their smartphones, without getting out of bed.

Multilingual support

The smartphone app can be displayed in the language that the guest's smartphone is set to.

CONTROL TECHNOLOGIES

Wireless Remote Controller
PAR-SL100A-E

Weekly Timer

The Weekly Timer enables the setting of operation start and finish times and adjusting the temperature as standard features. Up to 4 patterns per day can be set, providing operation that matches the varying conditions of each period, such as the number of customers in the store.

■ Example Operation Pattern (Winter/Heating mode)

	Mon.	Tues.	Wed.	Thurs.	Fri.	Sat.	Sun.
6:00	ON 20°C	ON 20°C	ON 20°C	ON 20°C	ON 20°C	ON 20°C	ON 20°C
8:00	Automatically changes to high-power operation at wake-up time						
10:00	OFF	OFF	OFF	OFF	OFF	ON 18°C	ON 18°C
12:00	Automatically turned off during work hours					Midday is warmer, so the temperature is set lower	
14:00							
16:00							
18:00	ON 20°C	ON 20°C	ON 20°C	ON 20°C	ON 20°C	ON 20°C	ON 20°C
20:00	Automatically turns on, synchronized with arrival at home					Automatically raises temperature setting to match time when outside-air temperature is low	
22:00 (during sleeping hours)	ON 18°C	ON 18°C	ON 18°C	ON 18°C	ON 18°C	ON 18°C	ON 18°C
	Automatically lowers temperature at bedtime for energy-saving operation at night						

*Weekly Timer cannot be used when On/Off Timer is in use.
*Only for SLZ-KF25/35/50/60VA2, PLA-ZP/RP35/50/60/71/100/125/140EA

Backlight

Backlight function incorporated, making screen easy to read in the dark. Even in dimly lit rooms, the screen can be seen clearly for trouble-free remote controller operation.

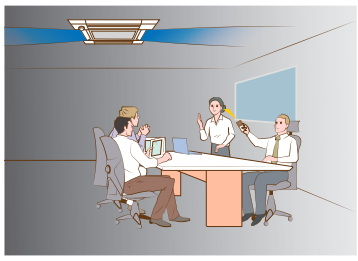

Individual Vane Settings

The airflow directions of the four vanes can each be adjusted independently. Easily set the optimum airflow according to the room setting.

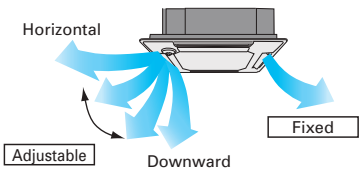

Dual Set Point

When the operation mode is set to the Auto (Dual Set Point) mode, two preset temperatures (one each for cooling and heating) can be set. Depending on the room temperature, the indoor unit will automatically operate in either the COOL or HEAT mode and keep the room temperature within the preset range.

Operation pattern during Auto (Dual Set Point) mode

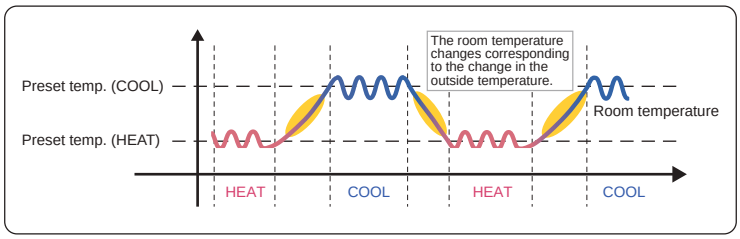

* Only available for compatible models.

Battery Replacement Sign

Previous wireless remote controllers were not easy to read, understand or use sometimes because the battery was low. Beginning with the PAR-SL100A-E, a battery charge indicator that shows the charge status is included in the LCD so it can be seen when the battery is low and needs to be changed.

3D i-see Sensor (Direct/Indirect Airflow)

Pressing the i-see button enables direct or indirect setting of all vanes.

Direct

Indirect

	Vane setting	
	Direct	Indirect
Cooling	horizontal → swing	keep horizontal
Heating	keep downward	downward → horizontal

Direct Airflow

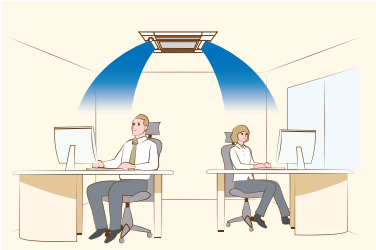

Indirect Airflow

*Only available for models equipped with 3D i-see Sensor.

Basic Functions

Functions	Button	Liquid crystal
OFF / ON	OFF/ON	
Preset temperature	TEMP	88.5 °C
Mode	MODE	Cool, Dry, Heat, Fan, Auto, Dual set point *Dual Set Point function not operational first use.
Fan speed	FAN	4-Speed, Auto
Vane angle	VANE	5-step, Swing, Auto
3D i-see Sensor	i-see	Direct, Indirect
Send sign		
Battery replacement sign		
Function setting		FUNCTION
Test run		TEST
Self check		CHECK
Not available		N/A

*This remote controller is only compatible with the following models: SLZ-M15/25/35/50/60FA, PLFY-P15/20/25/32/40/50VFM-E1, PLA-ZM/RP35/50/60/71/100/125/140EA, PLFY-P20/25/32/40/50/63/80/100/125VEM-E

*Functions available vary according to the model.

SYSTEM CONTROL

Versatile system controls can be realised using optional parts, relay circuits, control panels, etc.

MAJOR SYSTEM CONTROL

	System Examples		
Indoor Unit	M Series Indoor Unit	S Series & P Series Indoor Unit	P Series Indoor Unit
Outdoor Unit	M Series and MXZ Series Outdoor	S Series and MXZ Series Outdoor	P Series Outdoor
PAR-40MAA Control PAC-YT52CRA Control	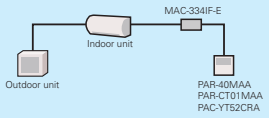	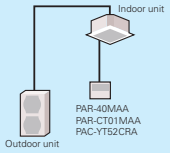	
Details	• Wired remote controller can be connected to indoor unit	Standard equipment (for indoor units compatible with wired remote controllers)	
Major Optional Parts Required	• MAC-334IF-E (Interface) • PAR-40MAA (Wired remote controller) • PAR-CT01MAA (Wired remote controller) • PAC-YT52CRA (Wired remote controller)	• PAR-40MAA (Wired remote controller) • PAR-CT01MAA (Wired remote controller) • PAC-YT52CRA (Wired remote controller)	
System Group Control	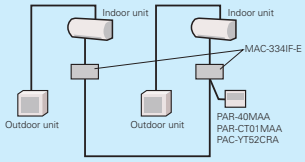	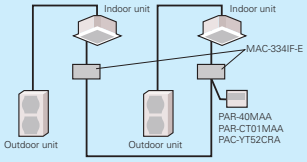	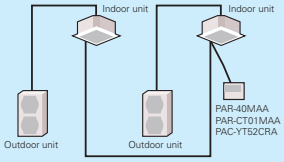
Details	• One remote controller can control plural air conditioners with the same settings simultaneously. • One remote controller can control up to 16 refrigerant systems. (When connected to a MXZ unit, MAC-334IF-E is counted as one system.) • Up to two remote controller can be connected. • PAR-SL100A cannot be used when connected through the MAC-334IF-E or when group control is used.		
Major Optional Parts Required	• MAC-334IF-E (Interface) • PAR-40MAA (Wired remote controller) • PAR-CT01MAA (Wired remote controller) • PAC-YT52CRA (Wired remote controller)		• PAR-40MAA (Wired remote controller) • PAR-CT01MAA (Wired remote controller) • PAC-YT52CRA (Wired remote controller)
M-NET Connections	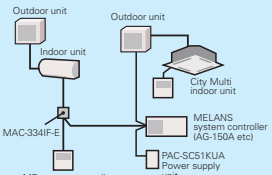	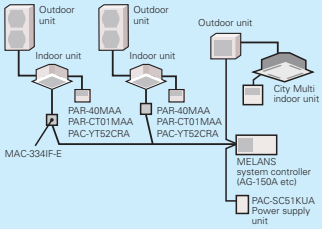	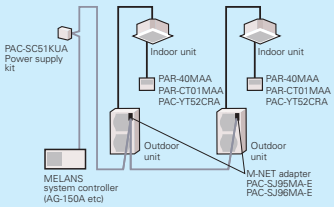
Details	• Group of air conditioners can be controlled by MELANS system controller (M-NET).		
Major Optional Parts Required	• MAC-334IF-E (M-NET Interface) • MELANS System controller • PAC-SC51KUA (power supply unit)		• PAC-SJ95MA-E or PAC-SJ96MA-E (M-NET converter) • MELANS System controller • PAC-SC51KUA (power supply unit)

OTHERS

For M Series Indoor Units (New A-control Models Only)

	System Examples	Connection Details	Control Details	Major Optional Parts Required
1 Remote On/Off Operation • Air conditioner can be started/stopped remotely. (1 and 2 can be used in combination)	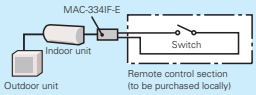	Connect the interface to the air conditioner. Then connect the locally purchased remote controller to the terminal in the interface.	On/Off operation is possible from a remote location.	• **MAC-334IF-E** (Interface) • Parts for circuit such as relay box, lead wire, etc. (to be purchased locally)
2 Remote Display of Operation Status • The On/Off status of air conditioners can be confirmed remotely. (1 and 2 can be used in combination)	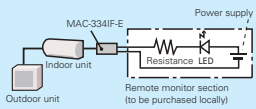	Connect the interface to the air conditioner. Then connect the locally purchased remote controller to the terminal in the interface.	The operation status (On/Off) or error signals can be monitored from a remote location.	• **MAC-334IF-E** (Interface) • Parts for circuit to be purchased locally (DC power source needed) • External power source (12V DC) is required when using MAC-334IF-E.

For P Series and S Series Indoor Units

	System Examples		Details	Major Optional Parts Required
	Wired remote controller	Wireless remote controller		
A 2-remote Controller Control With two remote controllers, control can be performed locally and remotely from two locations.	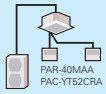 * Set "Main" and "Sub" remote controllers. (Example of 1 : 1 system)	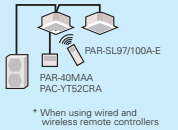 * When using wired and wireless remote controllers (Example of Simultaneous Twin)	• Up to two remote controllers can be connected to one group. • Both wired and wireless remote controllers can be used in combination.	• Wired Remote Controller **PAR-40MAA** **PAC-YT52CRA** (for PKA, **PAC-SH29TC-E** is required) • Wireless Remote Controller **PAR-SL97A-E / PAR-SL100A-E** (only for SLZ) • Wireless Remote Controller Kit for PCA **PAR-SL94B-E**
B Operation Control by Level Signal Air conditioner can be started/stopped remotely. In addition, On/Off operation by local remote controller can be prohibited/permitted.	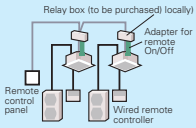 (Example of 1 : 1 system x 2)	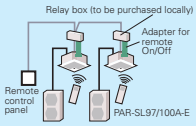 (Example of 1 : 1 system x 2)	• Operation other than On/Off (e.g., adjustment of temperature, fan speed, and airflow) can be performed even when remote controller operation is prohibited. • Timer control is possible with an external timer.	• Adapter for remote On/Off **PAC-SE55RA-E** • Relay box (to be purchased locally) • Remote control panel (to be purchased locally)
C Operation Control by Pulse Signal	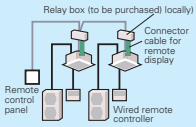 (Example of 1 : 1 system x 2)	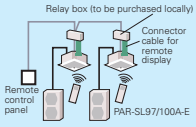 (Example of 1 : 1 system x 2)	• The pulse signal can be turned On/Off. • Operation/emergency signal can be received at a remote location.	• Connector cable for remote display **PAC-SA88HA-E / PAC-725AD** **(10 pcs. x PAC-SA88HA-E)** • Relay box (to be purchased locally) • Remote control panel (to be purchased locally)
D Remote Display of Operating Status Operating status can be displayed at a remote location.	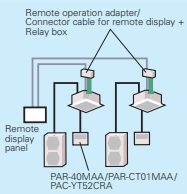 (Example of 1 : 1 system)	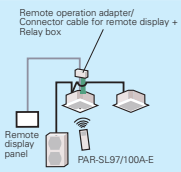 (Example of Simultaneous Twin)	• Operation/emergency signal can be received at a remote location (when channeled through the **PAC-SF40RM-E** → no-voltage signal, when channeled through the **PAC-SA88HA-E** → DC 12V signal).	• Remote display panel (to be purchased locally) • Connector cable for remote display **PAC-SA88HA-E / PAC-725AD** **(10 pcs. x PAC-SA88HA-E)** • Relay box (to be purchased locally) • Remote operation adapter **PAC-SF40RM-E** *Unable to use with wireless remote controller
E Timer Operation Allows On/Off operation with timer *For control by an external timer, refer to B Operation Control by Level Signal.	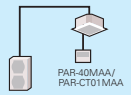 (Example of 1 : 1 system)		• **Weekly Timer:** On/Off and up to 8 pattern temperatures can be set for each calendar day. (Initial setting) • **On/Off Timer:** On/Off can be set once each within 72 hr in intervals of 5-minute units. • **Auto-off Timer:** Operation will be switched off after a certain time elapse. Set time can be changed from 30 min. to 4 hr. at 10 min. intervals. *Simple Timer and Auto-off Timer cannot be used at the same time.	Standard functions of **PAR-40MAA / PAR-CT01MAA**

FUNCTION LIST (1)

Category		Icon		M SERIES						
			Combination: Indoor unit	MSZ-LN18/25/35/50/60VG2(W)(V)(R)(B)	MSZ-FT25/35/50VG	MSZ-AP15/20VG	MSZ-AP25/35/42/50/60/71VG	MSZ-EF18/22/25/35/42/50VG(W)(B)(S)	MSZ-BT20/25/35/50VG	MSZ-HR25/35/42/50/60/71VF
			Combination: Outdoor unit	MUZ-LN	MUZ-FT	MUZ-AP		MUZ-EF	MUZ-BT	MUZ-HR
Technology		DC Inverter		●	●	●	●	●	●	●
		Joint Lap DC Motor		●	●	●	●	●	●	●
		Reluctance DC Rotary Compressor								
		Heating Caulking (Compressor)		●	●	●	●	●	●	●
		DC Fan Motor		●	●	●	●	●	●	
		PAM (Pulse Amplitude Modulation)		●	●	●	●	●	●	●
		Power Receiver and Twin LEV Control								
		Grooved Piping		●	●	●	●	●	●	●
Functions	i-see Sensor	Felt Temperature Control (3D i-see Sensor)		●						
		AREA Temperature Monitor		●						
	Energy Saving	Econo Cool Energy-saving Feature		●	●	●	●	●	●	●
		Standby Power Consumption Cut		●	●	●	●	●	●	
	Air Quality	Plasma Quad Plus		●						
		Plasma Quad								
		Dual Barrier Coating		●						
		Silver-ionized Air Purifier Filter		Opt	●		Opt	●	Opt	Opt
		Air Purifying Filter			●		●	●	●	
	Air Distribution	Double Vane		●						
		Horizontal Vane		●	●	●	●	●	●	●
		Vertical Vane		●	●	●	●			
		High Ceiling Mode								
		Auto Fan Speed Mode		●	●	●	●	●	●	●
		Circulator Mode		●	●					
	Convenience	On/off Operation Timer		●	●	●	●	●	●	●
		"i save" Mode		●	●	●	●	●	●	●
		Auto Changeover		●	●	●	●	●	●	●*1
		Auto Restart		●	●	●	●	●	●	●
		Low-temperature Cooling		●	●	●	●	●	●	●
		10°C Heating		●	●	●	●		●	●
		Low-noise Operation (Outdoor Unit)								
		Night Mode		●	●	●	●		●	
		Ampere Limit Adjustment								
		Operation Lock (Indoor)		●	●	●	●		●	●
		Operation Lock (Outdoor)								
		Built-in Weekly Timer Function		●	●	●	●	●		
	System Control	PAR-40MAA Control *3		Opt	Opt	Opt	Opt	Opt	Opt	Opt
		PAR-CT01MAA Control *3		Opt	Opt	Opt	Opt	Opt	Opt	Opt
		PAC-YT52CRA Control *3		Opt	Opt	Opt	Opt	Opt	Opt	Opt
		Centralised On/Off Control *3		Opt	Opt	Opt	Opt	Opt	Opt	Opt
		System Group Control *3		Opt	Opt	Opt	Opt	Opt	Opt	Opt
		M-NET Connection *3		Opt	Opt	Opt	Opt	Opt	Opt	Opt
		Wi-Fi Interface		●	Opt	Opt	Opt	Opt	Opt	Opt
		Energy Consumption Monitoring through MELCloud								
	Installation	Cleaning-free Pipe Reuse		●	●	●	●	●	●	●
		Wiring/Piping Correction Function								
		Drain Pump								
		Flare Connection		●	●	●	●	●	●	●
	Maintenance	Self-Diagnosis Function (Check Code Display)		●	●	●	●	●	●	●
		Failure Recall Function		●	●	●	●	●	●	●

*1 When multiple indoor units connected to an MXZ outdoor unit are running at the same time, simultaneous cooling and heating is not possible.
*2 For the possible connectivity of MXZ outdoor units and indoor units, please refer to the list on pages 115-116 for details.
*3 Please refer to “System Control” on pages for details.
*4 When connected to MXZ outdoor units, the outdoor operating sound will not change.

M SERIES										
MSZ-FH25/35/50VE2	MSZ-SF25/35/42/50VE3	MSZ-GF60/71VE2	MSZ-WN25/35VA	MSZ-DM25/35VA	MSZ-HJ25/35/50VA	MSZ-HJ60/71VA	MFZ-KJ25/35/50VE2	MFZ-KT25/35/50/60VG	MLZ-KP25/35/50VF
MUZ-FH	MUZ-SF	MUZ-GF	MUZ-WN	MUZ-DM	MUZ-HJ	MUZ-HJ	MUFZ-KJ	SUZ-M	SUZ-M
●	●	●	●	●	●	●	●	●	●
●	●	●	●	●	●	●	●	●	●
●	●		●	●	●	●	●	●	●
●	●	●	●	●		●	●	●	●
●	●	●	●	●	●	●	●	●	●
●	●	●	●	●	●	●	●	●	●
●									
●									
●	●	●	●	●	●	●	●	●	●
●	●	●					●	●	
●									
●	Opt	Opt					●	●	Opt
	●	●							
●									
●	●	●	●	●	●	●	●	●	●
●	●								●
									●
●	●		●	●	●	●	●	●	●
●	●	●	●	●	●	●	●	●	●
●	●	●					●	●	●
●	●	●					●*1	●*1	●
●	●	●	●	●	●	●	●	●	●
●	●	●					●	●	●
●	●	●					●	●	●
Opt	Opt	Opt	Opt	Opt			Opt	Opt	Opt
Opt	Opt	Opt	Opt	Opt			Opt	Opt	Opt
Opt	Opt	Opt		Opt			Opt	Opt	Opt
Opt	Opt	Opt		Opt			Opt	Opt	Opt
Opt	Opt	Opt		Opt			Opt	Opt	Opt
Opt	Opt	Opt		Opt			Opt	Opt	Opt
Opt	Opt	Opt	Opt	Opt			Opt	Opt	Opt
●	●	●	●	●	●	●	●	●	●
									●
									●
●	●	●	●	●	●	●	●	●	●
●	●	●	●	●	●	●	●	●	●
●	●	●	●	●	●	●	●	●	●

• The figures listed in the table are “only when combined with an outdoor unit with the appropriate capacity range”.
• Opt: Separate parts must be purchased.

FUNCTION LIST (2)

Category		Icon		S SERIES					
			Combination: Indoor unit	SLZ-M15/25/35/50/60FA *4				SEZ-M25/35/50/60/71DA(L)	
			Combination: Outdoor unit	SUZ-M	SUZ-KA	PUZ-ZM	PUHZ-ZRP	SUZ-M	SUZ-KA
Technology		DC Inverter		●	●	●	●	●	●
		Joint Lap DC Motor		●	●			●	●
		Magnetic Flux Vector Sine Wave Drive				●	●		
		Reluctance DC Rotary Compressor		●	●			●	●
		Highly Efficient DC Scroll Compressor				●	●		
		Heating Caulking (Compressor)		●	●			●	●
		DC Fan Motor		●	●	●	●	●	●
		Vector-Wave Eco Inverter				●	●		
		PAM (Pulse Amplitude Modulation)		●	●	●	●	●	●
		Power Receiver and Twin LEV Control				●	●		
		Grooved Piping		●	●	●	●	●	●
Functions	i-see Sensor	Felt Temperature Control (3D i-see Sensor)		Opt	Opt	Opt	Opt		
		AREA Temperature Monitor		Opt	Opt	Opt	Opt		
	Energy Saving	Demand Function							
	Attractive	Pure White		●	●	●	●		
		Auto Vane		●	●	●	●		
	Air Quality	Fresh-air Intake		●	●	●	●		
		High-efficiency Filter							
		Oil Mist Filter							
		Long-life Filter		●	●	●	●		
		Filter Check Signal		●	●	●	●		
	Air Distribution	Horizontal Vane		●	●	●	●		
		Vertical Vane							
		High Ceiling Mode		●	●	●	●		
		Low Ceiling Mode							
		Auto Fan Speed Mode		●	●	●	●	●	●
	Convenience	On/off Operation Timer		●	●	●	●	●	●
		Auto Changeover		●	●	●	●	●	●
		Auto Restart		●	●	●	●	●	●
		Low-temperature Cooling		●	●	●	●	●	●
		Low-noise Operation (Outdoor Unit)				●	●		
		Ampere Limit Adjustment				60-140V	60-140V		
		Operation Lock							
		Rotation, Back-up and 2nd Stage Cut-in Functions				●	●		
		Dual Set Point *3				●	●		
	System Control	PAR-40MAA Control *1		Opt	Opt	Opt	Opt	Opt	Opt
		PAR-CT01MAA Control *1		Opt	Opt	Opt	Opt	Opt	Opt
		PAC-YT52CRA Control *1		Opt	Opt	Opt	Opt	Opt	Opt
		Centraliesd On/Off Control *1		Opt	Opt	Opt	Opt	Opt	Opt
		System Group Control *1		Opt	Opt	Opt	Opt	Opt	Opt
		M-NET Connection *1		Opt	Opt			Opt	Opt
		COMPO *2				71-140	71-140		
		Energy Consumption Monitoring through MELCloud							
	Installation	Cleaning-free Pipe Reuse		●	●	●	●	●	●
		Reuse of Existing Wiring							
		Wiring/Piping Correction Function							
		Drain Pump		●	●	●	●	Opt	Opt
		Pump Down Switch							
		Flare Connection		●	●	●	●	●	●
	Maintenance	Self-Diagnosis Function (Check Code Display)		●	●	●	●	●	●
		Failure Recall Function		●	●	●	●	●	●

*1 Please refer to "System Control" on pages for details.
*2 Please refer to page 57 for details.
*3 This function is only available with PAR-40MAA, PAC-YT52CRA, PAR-SL100A-E.
*4 SLZ-M15 can be connected with R32 MXZ only.

• If a numerical figure is listed, the feature is only available with the outdoor unit of that capacity.
• Opt: Optional parts must be purchased.

Category		Icon		P SERIES									
			Combination: Indoor unit	PLA-ZM35/50/60/71/100/125/140EA			PLA-M35/50/60/71/100/125/140EA						
			Combination: Outdoor unit	PUHZ-SHW	PUZ-ZM	PUHZ-ZRP	PUHZ-SHW	PUZ-ZM	PUHZ-ZRP	SUZ-M	SUZ-KA	PUZ-M	PUHZ-P
Technology		DC Inverter		●	●	●	●	●	●	●	●	●	●
		Joint Lap DC Motor			35-71	35-71		35-71	35-71	●	●	100	100
		Magnetic Flux Vector Sine Wave Drive		●	●	●	●	●	●			●	●
		Reluctance DC Rotary Compressor			35-71	35-71		35-71	35-71	●	●	100-140	100-140
		Highly Efficient DC Scroll Compressor		●	100-250	100-250	●	100-250	100-250			200-250	200-250
		Heating Caulking (Compressor)			35-71	35-71		35-71	35-71	●	●	100	100
		DC Fan Motor		●	●	●	●	●	●	●	●	●	●
		Vector-Wave Eco Inverter		●	●	●	●	●	●			●	●
		PAM (Pulse Amplitude Modulation)		●	35-140	35-140	●	35-140	35-140	●	●	100-140V	100-140V
		Power Receiver and Twin LEV Control		●	35-250	35-140	●	35-250	35-140			100-250	100-140
		Grooved Piping		●	●	●	●	●	●	●	●	●	●
Functions	i-see Sensor	Felt Temperature Control (3D i-see Sensor)		Opt	Opt	Opt	Opt	Opt	Opt	Opt	Opt	Opt	Opt
		AREA Temperature Monitor		Opt	Opt	Opt	Opt	Opt	Opt	Opt	Opt	Opt	Opt
	Energy Saving	Demand Function		Opt	Opt	Opt	Opt	Opt	Opt			Opt	Opt
	Attractive	Pure White		●	●	●	●	●	●	●	●	●	●
		Auto Vane		●	●	●	●	●	●	●	●	●	●
	Air Quality	Fresh-air Intake		●	●	●	●	●	●	●	●	●	●
		High-efficiency Filter		Opt	Opt	Opt	Opt	Opt	Opt	Opt	Opt	Opt	Opt
		Oil Mist Filter											
		Long-life Filter		●	●	●	●	●	●	●	●	●	●
		Filter Check Signal		●	●	●	●	●	●	●	●	●	●
	Air Distribution	Horizontal Vane		●	●	●	●	●	●	●	●	●	●
		Vertical Vane											
		High Ceiling Mode		●	●	●	●	●	●	●	●	●	●
		Low Ceiling Mode		●	●	●	●	●	●	●	●	●	●
		Auto Fan Speed Mode		●	●	●	●	●	●	●	●	●	●
	Convenience	On/off Operation Timer		●	●	●	●	●	●	●	●	●	●
		Auto Changeover		●	●	●	●	●	●	●	●	●	●
		Auto Restart		●	●	●	●	●	●	●	●	●	●
		Low-temperature Cooling		●	●	●	●	●	●	●	●	●	●
		Low-noise Operation (Outdoor Unit)		●	●	●	●	●	●			●	●
		Ampere Limit Adjustment		112/140	60-140V 200/250	60-140V 200/250	112/140	60-140V 200/250	60-140V 200/250				
		Operation Lock											
		Rotation, Back-up and 2nd Stage Cut-in Functions		●	●	●	●	●	●			●	●
		Dual Set Point *4			●	●		●	●			●	●
	System Control	PAR-40MAA Control *1		Opt	Opt	Opt	Opt	Opt	Opt	Opt	Opt	Opt	Opt
		PAR-CT01MAA Control *1		Opt	Opt	Opt	Opt	Opt	Opt	Opt	Opt	Opt	Opt
		PAC-YT52CRA Control *1		Opt	Opt	Opt	Opt	Opt	Opt	Opt	Opt	Opt	Opt
		Centraliesd On/Off Control *1		Opt	Opt	Opt	Opt	Opt	Opt	Opt	Opt	Opt	Opt
		System Group Control *1		●	●	●	●	●	●	Opt	Opt	●	●
		M-NET Connection *1		Opt	Opt	Opt	Opt	Opt	Opt	Opt	Opt	Opt	Opt
		COMPO *2		●	71-250	71-250	●	71-250	71-250			●	●
		Energy Consumption Monitoring through MELCloud											
	Installation	Cleaning-free Pipe Reuse		●	●	●	●	●	●	●	●	●	●
		Reuse of Existing Wiring		Opt	Opt	Opt	Opt	Opt	Opt			Opt	Opt
		Wiring/Piping Correction Function											
		Drain Pump		●*3	●*3	●*3	●*3	●*3	●*3	●*3	●*3	●*3	●*3
		Pump Down Switch		●	●	●	●	●	●			●	●
		Flare Connection		●	●	●	●	●	●	●	●	●	●
	Maintenance	Self-Diagnosis Function (Check Code Display)		●	●	●	●	●	●	●	●	●	●
		Failure Recall Function		●	●	●	●	●	●	●	●	●	●

*1 Please refer to "System Control" on pages for details.
*2 Please refer to page 64 for details.
*3 PEAD-M JAL are not equipped with a drain pump.
*4 This function is only available with PAR-40MAA, PAC-YT52CRA, PAR-SL100A-E.

• If a numerical figure is listed, the feature is only available with the outdoor unit of that capacity.
• Opt: Optional parts must be purchased.

FUNCTION LIST (2)

Category		Icon		P SERIES												
			Combination: Indoor unit	PEAD-M35/50/60/71/100/125/140JA(L)						PEAD-M35/50/60/71/JA(L)	PEA-M200/250LA				PKA-M35/50LA(L)	
			Combination: Outdoor unit	PUHZ-SHW	PUZ-ZM	PUHZ-ZRP	PUZ-M	PUHZ-P	SUZ-M	SUZ-KA	PUZ-ZM	PUHZ-ZRP	PUZ-M	PUHZ-P	PUZ-ZM	PUHZ-ZRP
Technology		DC Inverter		●	●	●	●	●	●	●	●	●	●	●	●	●
		Joint Lap DC Motor			35-71	35-71	100	100	●	●					35-71	35-71
		Magnetic Flux Vector Sine Wave Drive		●	●	●	●	●			●	●	●	●	●	●
		Reluctance DC Rotary Compressor			35-71	35-71	100-140	100-140	●	●					35-71	35-71
		Highly Efficient DC Scroll Compressor		●	100-250	100-250	200/250	200/250			●	●	●	●	100-200	100-200
		Heating Caulking (Compressor)			35-71	35-71	100	100	●	●					35-71	35-71
		DC Fan Motor		●	●	●	●	●	●	●	●	●	●	●	●	●
		Vector-Wave Eco Inverter		●	●	●	●	●			●	●	●	●	●	●
		PAM (Pulse Amplitude Modulation)		●	35-140	35-140	100-140V	100-140V	●	●					35-140	35-140
		Power Receiver and Twin LEV Control		●	35-250	35-140	100-250	100-140			●		●		35-200	35-140
		Grooved Piping		●	●	●	●	●	●	●	●	●	●	●	●	●
Functions	i-see Sensor	Felt Temperature Control (3D i-see Sensor)														
		AREA Temperature Monitor														
	Energy Saving	Demand Function		Opt	Opt	Opt	Opt	Opt			Opt	Opt	Opt	Opt	Opt	Opt
	Attractive	Pure White													●	●
		Auto Vane													●	●
	Air Quality	Fresh-air Intake														
		High-efficiency Filter														
		Oil Mist Filter														
		Long-life Filter		●	●	●	●	●	●	●	Opt	Opt	Opt	Opt		
		Filter Check Signal		●	●	●	●	●	●	●	●	●	●	●	Opt	Opt
	Air Distribution	Horizontal Vane													●	●
		Vertical Vane														
		High Ceiling Mode														
		Low Ceiling Mode														
		Auto Fan Speed Mode		●	●	●	●	●	●	●	●	●	●	●	●	●
	Convenience	On/off Operation Timer		●	●	●	●	●	●	●	●	●	●	●	●	●
		Auto Changeover		●	●	●	●	●	●	●	●	●	●	●	●	●
		Auto Restart		●	●	●	●	●	●	●	●	●	●	●	●	●
		Low-temperature Cooling		●	●	●	●	●	●	●	●	●	●	●	●	●
		Low-noise Operation (Outdoor Unit)		●	●	●	●	●			●	●	●	●	●	●
		Ampere Limit Adjustment		112/140	60-140V 200/250	60-140V 200/250						●			71-140V 200	71-140V 200
		Operation Lock														
		Rotation, Back-up and 2nd Stage Cut-in Functions		●	●	●	●	●			●		●		●	●
		Dual Set Point *4			●	●	●	●			●	●	●	●	●	●
	System Control	PAR-40MAA Control *1		Opt	Opt	Opt	Opt	Opt	Opt	Opt	Opt	Opt	Opt	Opt	Opt	Opt
		PAR-CT01MAA Control *1		Opt	Opt	Opt	Opt	Opt	Opt	Opt	Opt	Opt	Opt	Opt	Opt	Opt
		PAC-YT52CRA Control *1		Opt	Opt	Opt	Opt	Opt	Opt	Opt	Opt	Opt	Opt	Opt	Opt	Opt
		Centraliesd On/Off Control *1		Opt	Opt	Opt	Opt	Opt	Opt	Opt	Opt		Opt		Opt	Opt
		System Group Control *1		●	●	●	●	●	Opt	Opt	●	●	●	●	Opt	Opt
		M-NET Connection *1		Opt	Opt	Opt	Opt	Opt	Opt	Opt	Opt	Opt	Opt	Opt	Opt	Opt
		COMPO *2		●	71-250	71-250	●	●			●		●		71-200	71-200
		Energy Consumption Monitoring through MELCloud														
	Installation	Cleaning-free Pipe Reuse		●	●	●	●	●	●	●	●	●	●	●	●	●
		Reuse of Existing Wiring		Opt	Opt	Opt	Opt	Opt							Opt	Opt
		Wiring/Piping Correction Function														
		Drain Pump		●*3	●*3	●*3	●*3	●*3	●*3	●*3	Opt	Opt	Opt	Opt	Opt	Opt
		Pump Down Switch		●	●	●	●	●			●	●	●	●	●	●
		Flare Connection		●	●	●	●	●	●	●	●	●	●	●	●	●
	Maintenance	Self-Diagnosis Function (Check Code Display)		●	●	●	●	●	●	●	●	●	●	●	●	●
		Failure Recall Function		●	●	●	●	●	●	●	●	●	●	●	●	●

*1 Please refer to "System Control" on pages for details.
*2 Please refer to page 64 for details.
*3 PEAD-M JAL are not equipped with a drain pump.
*4 This function is only available with PAR-40MAA, PAC-YT52CRA, PAR-SL100A-E.

P SERIES																
PKA-M35/50LA(L)		PKA-M60/71/100KA(L)					PCA-M35/50/60/71/100/125/140KA						PCA-M71HA		PSA-RP71/100/125/140KA	
PUZ-M	PUHZ-P	PUHZ-SHW	PUZ-ZM	PUHZ-ZRP	PUZ-M	PUHZ-P	PUZ-ZM	PUHZ-ZRP	PUZ-M	PUHZ-P	SUZ-M	SUZ-KA	PUZ-ZM	PUHZ-ZRP	PUHZ-ZRP	PUHZ-P
●	●	●	●	●	●	●	●	●	●	●	●	●	●	●	●	●
100	100		60/71	60/71	100	100	35-71	35-71	100	100	●	●	71	71	71	100
●	●	●	●	●	●	●	●	●	●	●			●	●	●	●
●	100-140		60/71	60/71	100-140	100-140	35-71	35-71	100-140	100-140	●	●	71	71	71	100-140
	200	●	100-250	100-250	200/250	200/250	100-250	100-250	200/250	200/250			100-250	100-250	100-250	200/250
			60/71	60/71	100	100	35-71	35-71	100	100	●	●	71	71	71	100
●	●	●	●	●	●	●	●	●	●	●	●	●	●	●	●	●
●	●	●	●	●	●	●	●	●	●	●			●	●	●	●
100V-140V	100V-140V	●	60-140	60-140	100-140V	100-140V	35-140	35-140	100-140V	100-140V	●	●	71-140	71-140	71-140	100-140V
100-140	100-140	●	60-250	60-140	100-250	100-140	35-250	35-140	100-250	100-140			71-250	71-140	71-140	100-140
●	●	●	●	●	●	●	●	●	●	●	●	●	●	●	●	●
Opt	Opt	Opt	Opt	Opt	Opt	Opt	Opt	Opt	Opt	Opt			Opt	Opt	Opt	Opt
●	●	●	●	●	●	●	●	●	●	●	●	●			●	●
●	●	●	●	●	●	●	●	●	●	●	●	●				
							●	●	●	●	●	●	●	●		
							Opt	Opt	Opt	Opt	Opt	Opt				
													●	●		
							●	●	●	●	●	●			●	●
Opt	Opt	Opt	Opt	Opt	Opt	Opt	●	●	●	●	●	●	●	●	●	●
●	●	●	●	●	●	●	●	●	●	●	●	●				
															●	●
							●	●	●	●	●	●				
							●	●	●	●	●	●				
●	●	●	●	●	●	●	●	●	●	●	●	●			●	●
●	●	●	●	●	●	●	●	●	●	●	●	●	●	●	●	●
●	●	●	●	●	●	●	●	●	●	●	●	●	●	●	●	●
●	●	●	●	●	●	●	●	●	●	●	●	●	●	●	●	●
●	●	●	●	●	●	●	●	●	●	●	●	●	●	●	●	●
●	●	●	●	●	●	●	●	●	●	●	●	●	●	●	●	●
		112/140	60-140V 200/250	60-140V 200/250			60-140V 200/250	60-140V 200/250						71-140V 200/250	71-140V 200/250	
●	●	●	●	●	●	●	●	●	●	●			●	●		
●	●		●	●	●	●	●	●	●	●						
Opt	Opt	Opt	Opt	Opt	Opt	Opt	Opt	Opt	Opt	Opt	Opt	Opt	Opt	Opt		
Opt	Opt	Opt	Opt	Opt	Opt	Opt	Opt	Opt	Opt	Opt	Opt	Opt	Opt	Opt		
Opt	Opt	Opt	Opt	Opt	Opt	Opt	Opt	Opt	Opt	Opt	Opt	Opt	Opt	Opt		
Opt	Opt	Opt	Opt	Opt	Opt	Opt	Opt	Opt	Opt	Opt	Opt	Opt	Opt	Opt	Opt	Opt
Opt	Opt	Opt	Opt	Opt	Opt	Opt	●	●	●	●	Opt	Opt	●	●	Opt	Opt
Opt	Opt	Opt	Opt	Opt	Opt	Opt	Opt	Opt	Opt	Opt	Opt	Opt	Opt	Opt	Opt	Opt
●	●	●	71-250	71-250	●	●	71-250	71-250	●	●			71-250	71-250	71-250	●
●	●	●	●	●	●	●	●	●	●	●	●	●	●	●	●	●
Opt	Opt	Opt	Opt	Opt	Opt	Opt	Opt	Opt	Opt	Opt			Opt	Opt	Opt	Opt
Opt	Opt	Opt	Opt	Opt	Opt	Opt	Opt	Opt	Opt	Opt	Opt	Opt				
●	●	●	●	●	●	●	●	●	●	●			●	●	●	●
●	●	●	●	●	●	●	●	●	●	●	●	●	●	●	●	●
●	●	●	●	●	●	●	●	●	●	●	●	●	●	●	●	●
●	●	●	●	●	●	●	●	●	●	●	●	●	●	●	●	●

• If a numerical figure is listed, the feature is only available with the outdoor unit of that capacity.
• Opt: Optional parts must be purchased.

FUNCTION LIST (2)

Category		Icon	MXZ SERIES													
		Series	Std					Lo-std		H2i		Lo-std		Std		
		Outdoor unit	MXZ-VA(2)					MXZ-VA		MXZ-VA		MXZ-VF		MXZ-VF3		
			2D	3E	4E	5E	6D	2DM	3DM	2E	4E	2HA	3HA	2F	3F	4F
Technology		DC Inverter	●	●	●	●	●	●	●	●	●	●	●	●	●	●
		Joiint Lap DC Motor	●	●	●	●		●	●	●		●	●	●	●	●
		Magnetic Flux Vector Sine Wave Drive														
		Reluctance DC Rotary Comperssor			83	●	●									
		Highly Efficient DC Scroll Compressor														
		Heating Caulking (Compressor)	●	●	●	●	●	●	●	●	●	●	●	●	●	●
		DC Fan Motor	●	●	●	●	●	●	●	●	●	●	●	●	●	●
		Vector-Wave Eco Inverter														
		PAM (Pulse Amplitude Modulation)	●	●	●	●	●	●	●	●	●	●	●	●	●	●
		Power Receiver and Twin LEV Control		●	72				●				●		●	●
		Grooved Piping	●	●	●	●	●	●	●	●	●	●	●	●	●	●
Functions	i-see Sensor	Felt Temperature Control (3D i-see)														
		AREA Temperature Monitor														
	Energy Saving	Demand Function														
	Attractive	Pure White														
		Auto Vane														
	Air Quality	Fresh-air Intake														
		High-efficiency Filter														
		Oil Mist Filter														
		Filter Check Signal														
	Air Distribution	Horizontal Vane														
		Vertical vane														
		High Ceiling Mode														
		Auto Fan Speed Mode														
	Convenience	On/off Operation Timer														
		Auto Changeover	●	●	●	●	●	●	●	●	●	●	●	●	●	●
		Auto Restart	●	●	●	●	●	●	●	●	●	●	●	●	●	●
		Low- temperature Cooling	●	●	●	●	●	●	●	●	●	●	●	●	●	●
		10°C Heating	●*1	●*1	●*1	●*1	●*1			●*1	●*1			●*1	●*1	●*1
		Low-noise Operation (Outdoor)	●	●	●	●	●	●	●	●	●	●	●	●	●	●
		Night Mode														
		Ampere Linit Adjustment			83	●	●			●	●					
		Operation Lock (Indoor)														
		Operation Lock (Outdoor)	●	●	●	●	●	●	●	●	●	●	●	●	●	●
		Built-in Weekly Timer Function														
		Rotation, Back-up abd 2nd Stage Cut-in Functions														
		Dual Set Point														
	System Control	PAR-40MAA Control	Opt	Opt	Opt	Opt	Opt	Opt	Opt	Opt	Opt	Opt	Opt	Opt	Opt	Opt
		PAR-CT01MAA Cotrol	Opt	Opt	Opt	Opt	Opt	Opt	Opt	Opt	Opt	Opt	Opt	Opt	Opt	Opt
		PAC-YT52CRA Control	Opt	Opt	Opt	Opt	Opt	Opt	Opt	Opt	Opt	Opt	Opt	Opt	Opt	Opt
		Centralised On/off Control	Opt	Opt	Opt	Opt	Opt	Opt	Opt	Opt	Opt	Opt	Opt	Opt	Opt	Opt
		System Group Control	Opt	Opt	Opt	Opt	Opt	Opt	Opt	Opt	Opt	Opt	Opt	Opt	Opt	Opt
		M-NET Connection			Opt (83)	Opt	Opt			Opt	Opt					
		Wi-Fi Interface														
		Energy/Consumption Monitaring trouth MEL Cloud														
		COMPO														
		MXZ Connection	●*2	●*2	●*2	●*2	●*2	●*2	●*2	●*2	●*2	●*2	●*2	●*2	●*2	●*2
	Installation	Cleaning-free Pipe Reuse										●*3	●*3	●*3	●*3	●*3
		Reuse of Existing Wiring														
		Wiring/Piping Correction Function	●	●	●	●	●	●	●	●	●	●	●	●	●	●
		Drain Pump														
		Pump Down Switch		●	●	●	●		●		●		●		●	●
		Flare Connection	●	●	●	●	●	●	●	●	●	●	●	●	●	●
	Maintenance	Self-Diagnosis Function (Check Code Display)	●	●	●	●	●	●	●	●	●	●	●	●	●	●
		Failure Recall Function	●	●	●	●	●	●	●	●	●	●	●	●	●	●

*1 When multiple indoor units connected to an MXZ outdoor unit are running at the same time, simultaneous cooling and heating is not possible.
*2 For the possible connectivity of MXZ outdoor units and indoor units, please refer to the list on pages 113 for details.
*3 Please refer to “System Control” on pages for details.

MXZ SERIES				
Std			Hyper Heating	
MXZ-VF			MXZ-VFHZ	
4F	5F	6F	2F	4F
●	●	●	●	●
●	●		●	
●	●	●	●	●
●	●	●	●	●
●	●	●	●	●
●	●	●	●	●
●	●	●	●	●
●	●	●	●	●
●	●	●	●	●
●*1	●*1	●*1	●*1	●*1
●	●	●	●	●
●	●	●	●	●
Opt	Opt	Opt	Opt	Opt
Opt	Opt	Opt	Opt	Opt
Opt	Opt	Opt	Opt	Opt
Opt	Opt	Opt	Opt	Opt
Opt	Opt	Opt	Opt	Opt
●*2	●*2	●*2	●*2	●*2
●*3	●*3	●*3	●*3	●*3
●	●	●	●	●

• The figures listed in the table are “only when combined with an outdoor unit with the appropriate capacity range”.
• Opt: Separate parts must be purchased.

Major Optional Parts

Part Name	Description
Deodorising Filter Captures small foul-smelling substances in the air.	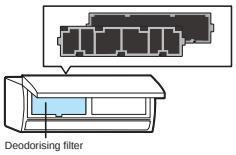
Air-cleaning Filter Removes fine dust particles from the air by means of static electricity.	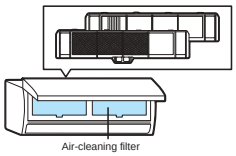
Silver-ionized Air Purifier Filter Captures the bacteria, pollen and other allergens in the air and neutralises them.	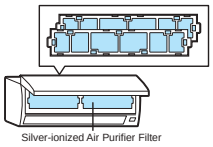
Oil Mist Filter Element Filter element (12 pieces) that blocks the oil mist for ceiling-suspended models used in professional kitchens.	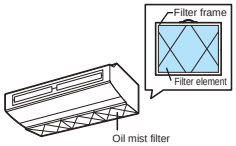
High-efficiency Filter Element Element for high-efficiency filter. Removes fine dust particles from the air.	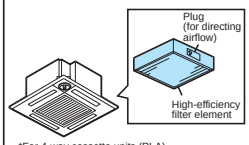 *For 4-way cassette units (PLA)
3D i-see Sensor Corner Panel for SLZ Corner panel holding the 3D i-see Sensor.	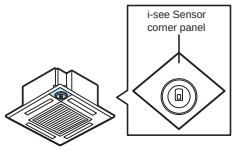
3D i-see Sensor Corner Panel for PLA Corner panel holding the 3D i-see Sensor.	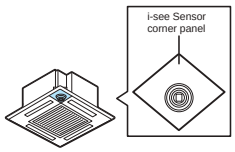
Shutter Plate Plate for blocking an air outlet of the 4-way cassette (PLA) indoor unit.	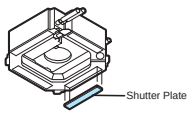
Multi-functional Casement Casement for fresh-air intake and attaching the high-efficiency filter element (optional).	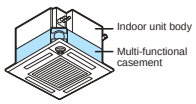
Fresh-air Intake Duct Flange Flange attachment for adding a duct to take in fresh air from outside.	 *For 4-way cassette units (PLA)
Space Panel Decorative cover for the installation when the ceiling height is low.	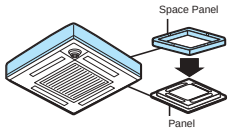

Part Name	Description
Drain Pump Pumps drain water to a point higher than that where the unit is installed.	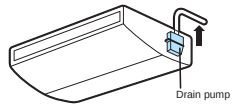 *for ceiling-suspended units
Decorative Cover To be attached to the upper section of ceiling-suspended models for professional kitchen use. Helps prevent dust accumulation.	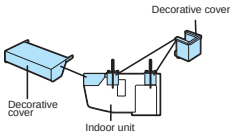
MA & Contact Terminal Interface Interface for connecting with the PAR-40MAA remote controller and PAC-YT52CRA, and to relay operation signals.	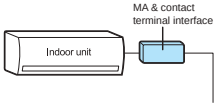
System Control Interface Interface to connect with M-NET controllers.	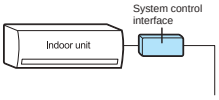
Wi-Fi Interface Interface enabling users to control air conditioners and check operating status via devices such as personal computers, tablets and smartphones.	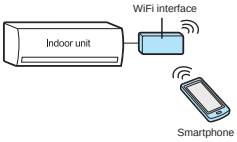
Connector Cable This product is an adaptor which inputs the incoming signals from an open/close switch to the air conditioner and outputs the on/off signals from the air conditioner to the back-up heater.	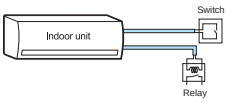
Power Supply Terminal Kit Terminal bed to change the power supply from outdoor power supply to separate indoor/outdoor power supplies.	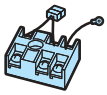
Wired Remote Controller Advanced deluxe remote controller with full-dot liquid-crystal display and backlight. Equipped with convenient functions like night-setback.	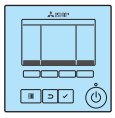
MA Touch Remote Controller Remote controller with the full color touch display. Smartphone/Tublet App is available for setting, customize and control.	
Simple Wired Remote Controller Remote controller with liquid-crystal display, and backlight function for operation in dark location.	
Remote Controller Terminal Block Kit for PKA The terminal block is used as a relay to wire an indoor unit and to two remote controllers or to wire a remote controller and multiple indoor units in order to perform group control.	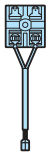

Part Name	Description
Wireless Remote Controller Signal Sender Handheld unit for sending operation signals to the indoor unit.	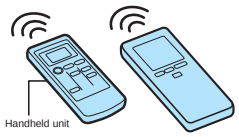
Wireless Remote Controller Signal Receiver Receives operation signals from the wireless remote controller handheld unit.	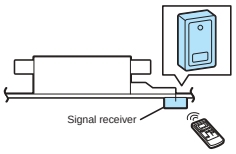
Wireless Remote Controller Kit (Sender & Receiver) Remote controller handheld unit (signal sender) and receiver (signal receiver) for ceiling-suspended units.	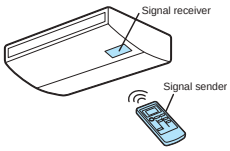
Control Holder Holder for storing the remote controller.	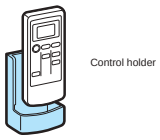
Remote Sensor Sensor to detect the room temperature at remote positions.	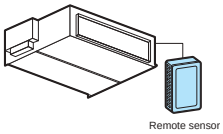
Remote On/Off Adapter Connector for receiving signals from the local system to control the on/off function.	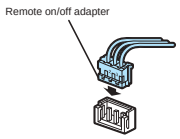
Remote Operation Adapter Adapter to display the operation status and control on/off function from a distance.	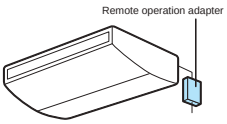
Connector Cable for Remote Display Connector used to display the operation status and control on/off function from a distance.	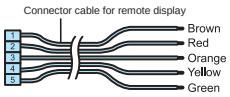
Distribution Pipe Branch pipe for P Series simultaneous multi-system use, or to connect two branch boxes for PUMY.	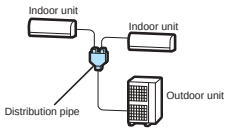 *P Series with 2 indoor units
Joint Pipe Part for connecting refrigerant pipes of different diametres.	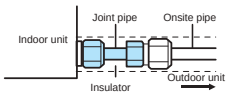
Liquid Refrigerant Dryer Removes water and minute particles from refrigerant pipes.	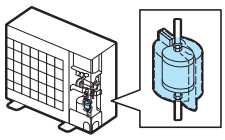
Branch Box Outer Cover Casement for branch boxes.	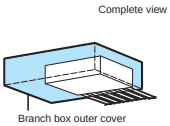

Part Name	Description
Air Discharge Guide Changes the direction of air being exhausted from the outdoor unit.	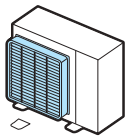
Air Protection Guide Protects the outdoor unit from the wind.	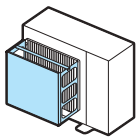
Drain Socket A set of caps to cover unnecessary holes at the bottom of the outdoor unit, and a socket to guide drain water to the local drain pipe.	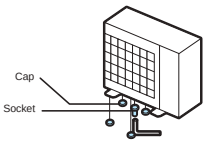
Centralised Drain Pan Catches drain water generated by the outdoor unit.	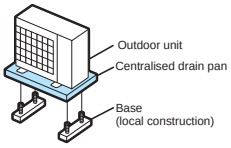
M-NET Converter Used to connect P Series A-control models to M-NET controllers.	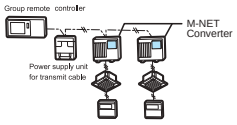
Control/Service Tool Monitoring tool to display operation and self-diagnosis data.	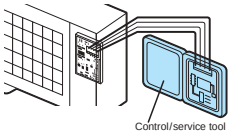
Step Interface Interface for adjusting the capacity of inverter-equipped outdoor units.	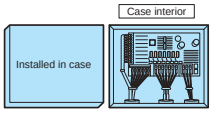
High-static Fan Motor Static pressure enhanced up to +30pa.	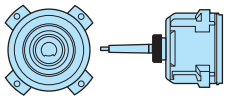

Optional Parts List <Indoor>

Indoor Unit \ Option			Filter: Silver-ionized Air Purifier Filter				Filter: Deodorising Filter		Softdry cloth	System Control Interface	MA & Contract Terminal Interface	Wi-Fi Interface	Connector Cable		Wired Remote Controller: Controller			Wired Remote Controller: Controller Holder	
			MAC-2360 FT	MAC-2370 FT	MAC-2380 FT	MAC-2390 FT	MAC-3000 FT-E	MAC-3010 FT-E	MAC-1001 CL-E	MAC-334IF-E	MAC-397IF-E	MAC-567IF-E	MAC-1702RA-E	MAC-1710RA-E	PAR-40MAA	PAR-CT01MAA	PAC-YT52CRA	MAC-1200RC-E	MAC-1300RC-E
M SERIES	Wall-mounted	MSZ-LN18VG2(W)(V)(R)(B)				●		●	●	●	●		●	●	●*1	●*1	●*1		●*2
		MSZ-LN25VG2(W)(V)(R)(B)				●		●	●	●	●		●	●	●*1	●*1	●*1		●*2
		MSZ-LN35VG2(W)(V)(R)(B)				●		●	●	●	●		●	●	●*1	●*1	●*1		●*2
		MSZ-LN50VG2(W)(V)(R)(B)				●		●	●	●	●		●	●	●*1	●*1	●*1		●*2
		MSZ-LN60VG2(W)(V)(R)(B)				●		●	●	●	●		●	●	●*1	●*1	●*1		●*2
		MSZ-FT25VG		●						●	●	●*3	●	●	●*1	●*1	●*1		●
		MSZ-FT35VG		●						●	●	●*3	●	●	●*1	●*1	●*1		●
		MSZ-FT50VG		●						●	●	●*3	●	●	●*1	●*1	●*1		●
		MSZ-AP15VG								●	●	●*3	●	●	●*1	●*1	●*1		●
		MSZ-AP20VG								●	●	●*3	●	●	●*1	●*1	●*1		●
		MSZ-AP25VG		●						●	●	●	●	●	●*1	●*1	●*1		●
		MSZ-AP35VG		●						●	●	●	●	●	●*1	●*1	●*1		●
		MSZ-AP42VG		●						●	●	●	●	●	●*1	●*1	●*1		●
		MSZ-AP50VG		●						●	●	●	●	●	●*1	●*1	●*1		●
		MSZ-AP60VG	●							●	●	●	●	●	●*1	●*1	●*1		●
		MSZ-AP71VG	●							●	●	●	●	●	●*1	●*1	●*1		●
		MSZ-EF18VG(W)(B)(S)		●					●	●	●	●*3	●	●	●*1	●*1	●*1		●
		MSZ-EF22VG(W)(B)(S)		●					●	●	●	●*3	●	●	●*1	●*1	●*1		●
		MSZ-EF25VG(W)(B)(S)		●					●	●	●	●*3	●	●	●*1	●*1	●*1		●
		MSZ-EF35VG(W)(B)(S)		●					●	●	●	●*3	●	●	●*1	●*1	●*1		●
		MSZ-EF42VG(W)(B)(S)		●					●	●	●	●*3	●	●	●*1	●*1	●*1		●
		MSZ-EF50VG(W)(B)(S)		●					●	●	●	●*3	●	●	●*1	●*1	●*1		●
		MSZ-BT20VG		●						●	●	●*3	●	●	●*1	●*1	●*1		
		MSZ-BT25VG		●						●	●	●*3	●	●	●*1	●*1	●*1		
		MSZ-BT35VG		●						●	●	●*3	●	●	●*1	●*1	●*1		
		MSZ-BT50VG		●						●	●	●*3	●	●	●*1	●*1	●*1		
		MSZ-HR25VF		●						●	●	●	●	●	●	●	●	●	
		MSZ-HR35VF		●						●	●	●	●	●	●	●	●	●	
		MSZ-HR42VF		●						●	●	●	●	●	●	●	●	●	
		MSZ-HR50VF		●						●	●	●	●	●	●	●	●	●	
		MSZ-HR60VF		●						●	●	●	●	●	●*1	●*1	●*1	●	
		MSZ-HR71VF		●						●	●	●	●	●	●*1	●*1	●*1	●	
		MSY-TP35VF		●						●	●	●	●	●	●	●	●		
		MSY-TP50VF		●						●	●	●	●	●	●	●	●		
		MSZ-FH25VE2			●		●			●	●	●	●	●	●*1	●*1	●*1		●
		MSZ-FH35VE2			●		●			●	●	●	●	●	●*1	●*1	●*1		●
		MSZ-FH50VE2			●		●			●	●	●	●	●	●*1	●*1	●*1		●
		MSZ-SF15VA								●	●	●			●*1	●*1	●*1		●
		MSZ-SF20VA								●	●	●			●*1	●*1	●*1		●
		MSZ-SF25VE3		●						●	●	●			●*1	●*1	●*1		●
		MSZ-SF35VE3		●						●	●	●			●*1	●*1	●*1		●
		MSZ-SF42VE3		●						●	●	●			●*1	●*1	●*1		●
		MSZ-SF50VE3		●						●	●	●			●*1	●*1	●*1		●
		MSZ-GF60VE2	●							●	●	●			●*1	●*1	●*1		●
		MSZ-GF71VE2	●							●	●	●			●*1	●*1	●*1		●
		MSZ-WN25VA		●						●	●	●	●	●	●	●	●		●
		MSZ-WN35VA		●						●	●	●	●	●	●	●	●		●
		MSZ-DM25VA		●						●	●	●	●	●	●*1	●*1	●*1	●	
		MSZ-DM35VA		●						●	●	●	●	●	●*1	●*1	●*1	●	
		MSZ-HJ25VA		●									●	●				●	
		MSZ-HJ35VA		●									●	●				●	
		MSZ-HJ50VA		●									●	●				●	
		MSZ-HJ60VA		●									●	●				●	
		MSZ-HJ71VA		●									●	●				●	
	Floor-standing	MFZ-KJ25VE2		●						●	●	●	●	●	●*1	●*1	●*1		●
		MFZ-KJ35VE2		●						●	●	●	●	●	●*1	●*1	●*1		●
		MFZ-KJ50VE2		●						●	●	●	●	●	●*1	●*1	●*1		●
		MFZ-KT25VG		●						●	●	●	●	●	●*1	●*1	●*1		●
		MFZ-KT35VG		●						●	●	●	●	●	●*1	●*1	●*1		●
		MFZ-KT50VG		●						●	●	●	●	●	●*1	●*1	●*1		●
		MFZ-KT60VG		●						●	●	●	●	●	●*1	●*1	●*1		●
	1-way cassette	MLZ-KP25VF		●						●	●	●	●	●	●*1	●*1	●*1		●
		MLZ-KP35VF		●						●	●	●	●	●	●*1	●*1	●*1		●
		MLZ-KP50VF		●						●	●	●	●	●	●*1	●*1	●*1		●

*1 MAC-334IF-E or MAC-397IF-E is required. When using MAC-397IF-E with PAR-40MAA, brightness needs to be set as low.
*2 Available only for LN18/25/35/50/60VG2W.
*3 Outside attachment only.

Optional Parts List <Indoor>

Indoor Unit \ Option			Filter: Oil Mist Filter Element	Filter: Long Life Filter	Filter: High-efficiency Filter Element				Filter: Filter Box					3D i-see Sensor Corner Panel		Shutter Plate	Multi-functional Casement	Fresh-air Intake Duct Flange		Space Panel	Drain Pump						
			PAC-SG38KF-E	PAC-KE85LAF	PAC-SH59KF-E	PAC-SH88KF-E	PAC-SH89KF-E	PAC-SH90KF-E	PAC-KE92TB-E	PAC-KE93TB-E	PAC-KE94TB-E	PAC-KE95TB-E	PAC-KE250TB-F	PAC-SF1ME-E	PAC-SE1ME-E	PAC-SJ37SP-E	PAC-SJ41TM-E	PAC-SH65OF-E	PAC-SF28OF-E	PAC-SJ65AS-E	PAC-SH94DM-E	PAC-SK01DM-E	PAC-SJ92DM-E	PAC-SJ93DM-E	PAC-SJ94DM-E	PAC-KE07DM-E	PAC-KE06DM-FI
S SERIES	4-way cassette	SLZ-M15FA												●													
		SLZ-M25FA												●													
		SLZ-M35FA												●													
		SLZ-M50FA												●													
		SLZ-M60FA												●													
	Ceiling - concealed	SEZ-M25DA(L)																							●		
		SEZ-M35DA(L)																							●		
		SEZ-M50DA(L)																							●		
		SEZ-M60DA(L)																							●		
		SEZ-M71DA(L)																							●		
P SERIES	4-way Cassette	PLA-ZM35EA			●										●	●	●	●		●							
		PLA-ZM50EA			●										●	●	●	●		●							
		PLA-ZM60EA			●										●	●	●	●		●							
		PLA-ZM71EA			●										●	●	●	●		●							
		PLA-ZM100EA			●										●	●	●	●		●							
		PLA-ZM125EA			●										●	●	●	●		●							
		PLA-ZM140EA			●										●	●	●	●		●							
		PLA-M35EA			●										●	●	●	●		●							
		PLA-M50EA			●										●	●	●	●		●							
		PLA-M60EA			●										●	●	●	●		●							
		PLA-M71EA			●										●	●	●	●		●							
		PLA-M100EA			●										●	●	●	●		●							
		PLA-M125EA			●										●	●	●	●		●							
		PLA-M140EA			●										●	●	●	●		●							
	Ceiling - concealed	PEAD-M35JA(L)							●																		
		PEAD-M50JA(L)							●																		
		PEAD-M60JA(L)								●																	
		PEAD-M71JA(L)								●																	
		PEAD-M100JA(L)									●																
		PEAD-M125JA(L)									●																
		PEAD-M140JA(L)										●															
		PEA-M200LA		●									●														●
		PEA-M250LA		●									●														●
	Wall - mounted	PKA-M35LA(L)																				●					
		PKA-M50LA(L)																				●					
		PKA-M60KA(L)																			●						
		PKA-M71KA(L)																			●						
		PKA-M100KA(L)																			●						
	Ceiling - suspended	PCA-M35KA				●																	●				
		PCA-M50KA				●																	●				
		PCA-M60KA					●																		●		
		PCA-M71KA					●																	●			
		PCA-M100KA						●																●			
		PCA-M125KA						●																●			
		PCA-M140KA						●																●			
		PCA-M71HA	●																●								
	Floor - standing	PSA-RP71KA																									
		PSA-RP100KA																									
		PSA-RP125KA																									
		PSA-RP140KA																									

*1 P Series indoor units can be used in combination with SUZ or MXZ outdoor units.
*2 Unable to use with wireless remote controller.
*3 PAC-SH29TC-E is required for wireless model.
*4 Group control cannot be used.

	Decorative Cover		System Control Interface	MA & Contact Terminal Interface	Wi-Fi Interface	Power Supply Terminal Kit					Wired Remote Controller				Wireless Remote Controller						Remote Sensor	Remote On/Off Adapter	Remote Operation Adapter	Connector Cable for Remote Display
											Controller			Terminal Block kit for PKA	Signal Sender		Signal Receiver			Controller Kit (Sender & Receiver)				
	PAC-SF81 KC-E	PAC-SF82 KC-E	MAC-334IF-E	MAC-397IF-E	MAC-567IF-E	PAC-SK38 HR-E	PAC-SG94 HR-E	PAC-SG96 HR-E	PAC-SG97 HR-E	PAC-SJ39 HR-E	PAR-40MAA	PAR-CT01MAA	PAC-YT52CRA	PAC-SH29TC-E	PAR-SL97 A-E	PAR-SL100 A-E	PAR-SA9C A-E	PAR-SF9 FA	PAR-SE9 FA-E	PAR-SL94 B-E	PAC-SE41 TS-E	PAC-SE55 RA-E	PAC-SF40 RM-E	PAC-SA88 HA-E
			●	●	●						●	●	●		●	●*4		●			●	●	●*2	●
			●	●	●						●	●	●		●	●*4		●			●	●	●*2	●
			●	●	●						●	●	●		●	●*4		●			●	●	●*2	●
			●	●	●						●	●	●		●	●*4		●			●	●	●*2	●
			●	●	●						●	●	●		●	●*4		●			●	●	●*2	●
			●	●	●						DA	DA	DA		●		●				●	●	●*2	●
			●	●	●						DA	DA	DA		●		●				●	●	●*2	●
			●	●	●						DA	DA	DA		●		●				●	●	●*2	●
			●	●	●						DA	DA	DA		●		●				●	●	●*2	●
			●	●	●						DA	DA	DA		●		●				●	●	●*2	●
			●*1	●*1	●					●	●	●	●		●	●*4			●		●	●	●*2	●
			●*1	●*1	●					●	●	●	●		●	●*4			●		●	●	●*2	●
			●*1	●*1	●					●	●	●	●		●	●*4			●		●	●	●*2	●
			●*1	●*1	●					●	●	●	●		●	●*4			●		●	●	●*2	●
			●*1	●*1	●					●	●	●	●		●	●*4			●		●	●	●*2	●
			●*1	●*1	●					●	●	●	●		●	●*4			●		●	●	●*2	●
			●*1	●*1	●					●	●	●	●		●	●*4			●		●	●	●*2	●
			●*1	●*1	●					●	●	●	●		●	●*4			●		●	●	●*2	●
			●*1	●*1	●					●	●	●	●		●	●*4			●		●	●	●*2	●
			●*1	●*1	●					●	●	●	●		●	●*4			●		●	●	●*2	●
			●*1	●*1	●					●	●	●	●		●	●*4			●		●	●	●*2	●
			●	●	●					●	●	●	●		●	●*4			●		●	●	●*2	●
			●	●	●					●	●	●	●		●	●*4			●		●	●	●*2	●
			●*1	●*1	●				●		●	●	●		●		●				●	●	●*2	●
			●*1	●*1	●				●		●	●	●		●		●				●	●	●*2	●
			●*1	●*1	●				●		●	●	●		●		●				●	●	●*2	●
			●*1	●*1	●				●		●	●	●		●		●				●	●	●*2	●
			●*1	●*1	●				●		●	●	●		●		●				●	●	●*2	●
			●*1	●*1	●				●		●	●	●		●		●				●	●	●*2	●
			●*1	●*1	●				●		●	●	●		●		●				●	●	●*2	●
			●*1	●*1	●						●	●	●		●		●				●	●	●*2	●
			●*1	●*1	●						●	●	●		●		●				●	●	●*2	●
			●*1	●*1	●	●					●*3	●*3	●*3	●	●	●					●	●	●*3	●
			●*1	●*1	●						●*3	●*3	●*3	●	●	●					●	●	●*2	●
			●*1	●*1	●		●				●*3	●*3	●*3	●	●						●	●		●
			●*1	●*1	●		●				●*3	●*3	●*3	●	●						●	●		●
			●*1	●*1	●		●				●*3	●*3	●*3	●	●						●	●		●
			●*1	●*1	●			●			●	●	●		●					●	●	●	●*2	●
			●*1	●*1	●			●			●	●	●		●					●	●	●	●*2	●
			●*1	●*1	●			●			●	●	●		●					●	●	●	●*2	●
			●*1	●*1	●			●			●	●	●		●					●	●	●	●*2	●
					●			●			●	●	●		●					●	●	●	●*2	●
					●			●			●	●	●		●					●	●	●	●*2	●
					●			●			●	●	●		●					●	●	●	●*2	●
	●								●		●	●	●		●						●	●	●*2	●
					●			●													●	●	●*2	●
					●			●													●	●	●*2	●
					●			●													●	●	●*2	●
					●			●													●	●	●*2	●

Optional Parts List <Outdoor>

Outdoor Unit		Option	Distribution Pipe						Joint Pipe								Liquid Refrigerant Dryer		
			For Twin (50:50)		For Triple (33:33:33)		For Quadruple (25:25:25:25)		Unit ø6.35 --> Pipe ø9.52	Unit ø9.52 --> Pipe ø12.7	Unit ø15.88 --> Pipe ø19.05	Unit ø9.52 --> Pipe ø15.88	Unit ø6.35 --> Pipe ø9.52	Unit ø9.52 --> Pipe ø12.7	Unit ø12.7 --> Pipe ø9.52	Unit ø12.7 --> Pipe ø15.88	For pipe ø6.35	For pipe ø9.52	For pipe ø12.7
														Flare					
			MSDD-50TR-E	MSDD-50WR-E	MSDT-111R-E	MSDT-111R3-E	MSDF-111R-E	MSDF-111R2-E	PAC-SG72RJ-E	PAC-SG73RJ-E	PAC-SG75RJ-E	PAC-SG76RJ-E	PAC-493PI	MAC-A454JP-E	MAC-A455JP-E	MAC-A456JP-E	PAC-SG81DR-E	PAC-SG82DR-E	PAC-SG85DR-E
M SERIES	L Series	MUZ-LN25VG																	
		MUZ-LN25VGHZ																	
		MUZ-LN35VG																	
		MUZ-LN35VGHZ																	
		MUZ-LN50VG																	
		MUZ-LN50VGHZ																	
		MUZ-LN60VG																	
	FT Series	MUZ-FT25VGHZ																	
		MUZ-FT35VGHZ																	
		MUZ-FT50VGHZ																	
	A Series	MUZ-AP15VG																	
		MUZ-AP20VG																	
		MUZ-AP25VG																	
		MUZ-AP25VGH																	
		MUZ-AP35VG																	
		MUZ-AP35VGH																	
		MUZ-AP42VG																	
		MUZ-AP42VGH																	
		MUZ-AP50VG																	
		MUZ-AP50VGH																	
		MUZ-AP60VG																	
		MUZ-AP71VG																	
	E Series	MUZ-EF25VG																	
		MUZ-EF25VGH																	
		MUZ-EF35VG																	
		MUZ-EF35VGH																	
		MUZ-EF42VG																	
		MUZ-EF50VG																	
	BT Series	MUZ-BT20VG																	
		MUZ-BT25VG																	
		MUZ-BT35VG																	
		MUZ-BT50VG																	
	HR Series	MUZ-HR25VF																	
		MUZ-HR35VF																	
		MUZ-HR42VF																	
		MUZ-HR50VF																	
		MUZ-HR60VF																	
		MUZ-HR71VF																	
	TP Series	MUY-TP35VF																	
		MUY-TP50VF																	
	F Series	MUZ-FH25VE																	
		MUZ-FH25VEHZ																	
		MUZ-FH35VE																	
		MUZ-FH35VEHZ																	
		MUZ-FH50VE																	
		MUZ-FH50VEHZ																	
	S Series	MUZ-SF25VE																	
		MUZ-SF25VEH																	
		MUZ-SF35VE																	
		MUZ-SF35VEH																	
		MUZ-SF42VE																	
		MUZ-SF42VEH																	
		MUZ-SF50VE																	
		MUZ-SF50VEH																	
	G Series	MUZ-GF60VE																	
		MUZ-GF71VE																	
	W Series	MUZ-WN25VA																	
		MUZ-WN35VA																	
	D Series	MUZ-DM25VA																	
		MUZ-DM35VA																	
	H Series	MUZ-HJ25VA																	
		MUZ-HJ35VA																	
		MUZ-HJ50VA																	
		MUZ-HJ60VA																	
		MUZ-HJ71VA																	
	Compact floor	MUFZ-KJ25VE																	
		MUFZ-KJ25VEHZ																	
		MUFZ-KJ35VE																	
		MUFZ-KJ35VEHZ																	
		MUFZ-KJ50VE																	
		MUFZ-KJ50VEHZ																	
S SERIES (R32)		SUZ-M25VA																	
		SUZ-M35VA													●				
		SUZ-M50VA																	
		SUZ-M60VA																	
		SUZ-M71VA																	
P SERIES (R410A)		SUZ-KA25VA6																	
		SUZ-KA35VA6													●				
		SUZ-KA50VA6																	
		SUZ-KA60VA6																	
		SUZ-KA71VA6																	

	Air Outlet Guide								Air Protection Guide			Drain Socket			Freeze-prevention Heater (for Drain Pan)			Centralized Drain Pan			M-NET Adapter	M-NET Converter		Control/ Service Tool	Step Interface 1 PC board w/attachment kit	Insulation for Accumulator		High Static Fan Motor
	MAC-881 SG	MAC-882 SG	MAC-856 SG	MAC-886 SG-E	MAC-883 SG	PAC-SJ07 SG-E	PAC-SG59 SG-E	PAC-SH96 SG-E	PAC-SJ06 AG-E	PAC-SH63 AG-E	PAC-SH95 AG-E	PAC-SJ08 DS-E	PAC-SG60 DS-E	PAC-SG61 DS-E	MAC-643 BH-E	MAC-644 BH-E	MAC-646 BH-E	PAC-SG63 DP-E	PAC-SG64 DP-E	PAC-SH97 DP-E	PAC-IF01 MNT-E	PAC-SJ96 MA-E	PAC-SJ95 MA-E	PAC-SK52ST	PAC-IF012 B-E	MAC-892 INS-E	MAC-893 INS-E	PAC-SJ71 FM-E
	●																											
	●																											
	●																											
	●																											
		●																										
				●																								
				●																								
	●																											
		●																										
		●																										
					●																							
	●																											
	●																											
	●																											
	●																											
	●																											
	●																											
		●																										
		●																										
		●																										
				●																								
	●																											
	●																											
	●																											
	●																											
	●														●													
		●															●											
					●																							
					●																							
					●																							
	●																											
					●																							
					●																							
	●																											
	●																											
		●																										
		●																										
	●																											
	●																											
	●																											
	●																											
				●																								
				●																								
	●																											
	●																											
	●																											
	●																											
	●																											
				●																								
				●																								
				●																								
				●																								
					●																							
					●																							
					●																							
					●																							
					●																							
					●																							
	●																											
				●																								
				●																								
	●																											
	●																											
	●																											
	●																											
				●																								
				●																								
	●																											
	●																											
				●																								
				●																								
															●													
	●														●													
				●												●												
				●																								
				●																								

Optional Parts List <Outdoor>

Outdoor Unit \ Option			Distribution Pipe								Branch Pipe/Header (Joint)					Joint Pipe										Liquid Refrigerant Dryer		
			For Twin (50:50)				For Triple (33:33:33)		For Quadruple (25:25:25:25)		In case of using 2-branch boxes		Branch Pipe	Header		Unit ø6.35 --> Pipe ø9.52		Unit ø9.52 --> Pipe ø12.7		Unit ø15.88 --> Pipe ø19.05	Unit ø9.52 --> Pipe ø15.88	Unit ø6.35 --> Pipe ø9.52	Unit ø9.52 --> Pipe ø12.7	Unit ø12.7 --> Pipe ø9.52	Unit ø12.7 --> Pipe ø15.88	For pipe ø6.35	For pipe ø9.52	For pipe ø12.7
											Flare	Brazing									Flare							
			MSDD-50TR-E	MSDD-50TR2-E	MSDD-50WR-E	MSDD-50WR2-E	MSDT-111R-E	MSDT-111R3-E	MSDF-1111R-E	MSDF-1111R2-E	MSDD-50AR-E	MSDD-50BR-E	CMY-Y62-G-E	CMY-Y64-G-E	CMY-Y68-G-E	PAC-SG72RJ-E	PAC-SG87RJ-E	PAC-SG73RJ-E	PAC-SG88RJ-E	PAC-SG75RJ-E	PAC-SG76RJ-E	PAC-493PI	MAC-A454JP-E	MAC-A455JP-E	MAC-A456JP-E	PAC-SG81DR-E	PAC-SG82DR-E	PAC-SG85DR-E
P SERIES	Power Inverter (R32)	PUZ-ZM35VKA															●									●		
		PUZ-ZM50VKA															●									●		
		PUZ-ZM60VHA																	●								●	
		PUZ-ZM71VHA		●															●								●	
		PUZ-ZM100VKA		●				●											●								●	
		PUZ-ZM100YKA		●				●											●								●	
		PUZ-ZM125VKA		●				●		●									●								●	
		PUZ-ZM125YKA		●				●		●									●								●	
		PUZ-ZM140VKA		●				●		●									●								●	
		PUZ-ZM140YKA		●				●		●									●								●	
		PUZ-ZM200YKA				●		●		●																		
		PUZ-ZM250YKA				●		●		●																		
	Power Inverter (R410A)	PUHZ-ZRP35VKA2														●										●		
		PUHZ-ZRP50VKA2														●										●		
		PUHZ-ZRP60VHA2																●		●							●	
		PUHZ-ZRP71VHA2	●															●		●							●	
		PUHZ-ZRP100VKA3	●				●											●		●							●	
		PUHZ-ZRP100YKA3	●				●											●		●							●	
		PUHZ-ZRP125VKA3	●				●		●									●		●							●	
		PUHZ-ZRP125YKA3	●				●		●									●		●							●	
		PUHZ-ZRP140VKA3	●				●		●									●		●							●	
		PUHZ-ZRP140YKA3	●				●		●									●		●							●	
		PUHZ-ZRP200YKA3			●		●		●									●									●	
		PUHZ-ZRP250YKA3			●		●		●																			●
	Standard Inverter (R32)	PUZ-M100VKA		●																							●	
		PUZ-M125VKA		●																							●	
		PUZ-M140VKA		●				●																			●	
		PUZ-M100YKA		●																							●	
		PUZ-M125YKA		●																							●	
		PUZ-M140YKA		●				●																			●	
		PUZ-M200YKA				●		●		●																	●	
		PUZ-M250YKA				●		●		●																		●
	Standard Inverter (R410A)	PUHZ-P100VKA	●																								●	
		PUHZ-P125VKA	●																								●	
		PUHZ-P140VKA	●				●																				●	
		PUHZ-P100YKA	●																								●	
		PUHZ-P125YKA	●																								●	
		PUHZ-P140YKA	●				●																				●	
		PUHZ-P200YKA3			●		●		●																		●	
		PUHZ-P250YKA3			●		●		●																			●
MXZ SERIES (R32)		MXZ-2F33VF3																										
		MXZ-2F42VF3																										
		MXZ-2F53VF(H)3																					●					
		MXZ-2F53VFHZ																					●					
		MXZ-3F54VF3																					●					
		MXZ-3F68VF3																			●	●	●					
		MXZ-4F72VF3																			●	●	●	●	●			
		MXZ-4F80VF3																			●	●	●	●	●			
		MXZ-4F83VF																			●	●	●	●	●			
		MXZ-4F83VFHZ																			●	●	●	●	●			
		MXZ-5F102VF																			●	●	●	●	●			
		MXZ-6F122VF																			●	●	●	●	●			
		MXZ-2HA40VF																										
		MXZ-2HA50VF																										
		MXZ-3HA50VF																										
MXZ SERIES (R410A)		MXZ-2D33VA																										
		MXZ-2D42VA2																										
		MXZ-2D53VA(H)2																					●					
		MXZ-2E53VAHZ																					●					
		MXZ-3E54VA																					●					
		MXZ-3E68VA																			●	●	●					
		MXZ-4E72VA																			●	●	●	●	●			
		MXZ-4E83VA																			●	●	●	●	●			
		MXZ-4E83VAHZ																			●	●	●	●	●			
		MXZ-5E102VA																			●	●	●	●	●			
		MXZ-6D122VA2																			●	●	●	●	●			
		MXZ-2DM40VA																										
		MXZ-3DM50VA																					●					
PUMY Series (R410A)		PUMY-SP112VKM(-BS)									●	●	●	●	●													
		PUMY-SP112YKM(-BS)									●	●	●	●	●													
		PUMY-SP125VKM(-BS)									●	●	●	●	●													
		PUMY-SP125YKM(-BS)									●	●	●	●	●													
		PUMY-SP140VKM(-BS)									●	●	●	●	●													
		PUMY-SP140YKM(-BS)									●	●	●	●	●													
		PUMY-P112VKM5(-BS)									●	●	●	●	●			●		●								
		PUMY-P112YKM(E)4(-BS)									●	●	●	●	●			●		●								
		PUMY-P125VKM5(-BS)									●	●	●	●	●			●		●								
		PUMY-P125YKM(E)4(-BS)									●	●	●	●	●			●		●								
		PUMY-P140VKM5(-BS)									●	●	●	●	●			●		●								
		PUMY-P140YKM(E)4(-BS)									●	●	●	●	●			●		●								
		PUMY-P200YKM2(-BS)									●	●	●	●	●			●		●								
POWERFUL HEATING		PUHZ-SHW112VHA	●																								●	
		PUHZ-SHW112YHA	●																								●	
		PUHZ-SHW140YHA	●																								●	

	Branch Box Outer Cover	Reactor Box	Different Diameter Joint				
			ø9.52-->ø12.7	ø12.7-->ø9.52	ø12.7-->ø15.88	ø6.35-->ø9.52	ø9.52-->ø15.88
	PAC-AK350CVR-E	PAC-RB01BC	MAC-A454JP	MAC-A455JP	MAC-A456JP	PAC-493PI	PAC-SG76RJ-E
PAC-MK34BC (Flare)	●	●	●	●	●	●	●
PAC-MK54BC (Flare)	●	●	●	●	●	●	●

Air Outlet Guide		Air Outlet Guide						Air Protection Guide			Drain Socket			Freeze-prevention Heater (for Drain Pan)						Centralized Drain Pan			M-NET Adapter	M-NET Converter		Control/ Service Tool	Step Interface 1 PC board w/attach-ment kit		Insulation for Accumulator		Con-nection Kit	High Static Fan Motor
MAC-881SG	MAC-882SG	MAC-856SG	MAC-886SG-E	MAC-883SG	PAC-SJ07SG-E	PAC-SG59SG-E	PAC-SH96SG	PAC-SJ06AG-E	PAC-SH63AG-E	PAC-SH95AG-E	PAC-SJ08DS-E	PAC-SG60DS-E	PAC-SG61DS-E	MAC-643BH-E	MAC-644BH-E	MAC-645BH-E	MAC-646BH-E	PAC-SJ10BH-E	PAC-SJ20BH-E	PAC-SG63DP-E	PAC-SG64DP-E	PAC-SH97DP-E	PAC-IF01MNT-E	PAC-SJ96MA-E	PAC-SJ95MA-E	PAC-SK52ST	PAC-IF012B-E	PAC-(S)IF013B-E	MAC-892INS-E	MAC-893INS-E	PAC-LV11M-J	PAC-SJ71FM-E
					●			●			●									●				●		●		●				
					●			●			●									●				●		●		●				
						●			●				●								●				●	●		●				
						●			●				●								●				●	●		●				
							●			●			●									●			●	●		●				●
							●			●			●									●			●	●		●				●
							●			●			●									●			●	●		●				●
							●			●			●									●			●	●		●				●
							●			●			●									●			●	●		●				●
							●			●			●									●			●	●		●				●
					●			●			●									●				●		●	●	●				
					●			●			●									●				●		●	●	●				
						●			●				●								●				●	●	●	●				
						●			●				●								●				●	●	●	●				
							●			●			●									●			●	●	●	●				●
							●			●			●									●			●	●	●	●				●
							●			●			●									●			●	●	●	●				●
							●			●			●									●			●	●	●	●				●
							●			●			●									●			●	●	●	●				●
							●			●			●									●			●	●	●	●				●
							●			●			●									●			●	●	●	●				
							●			●			●									●			●	●	●	●				
							●			●			●									●			●	●						
							●			●			●									●			●	●						
							●			●			●									●			●	●						
							●			●			●									●			●	●						
							●			●			●									●			●	●						
							●			●			●									●			●	●						
							●			●			●									●			●	●	●	●				
							●			●			●									●			●	●	●	●				
							●			●			●									●			●	●						
							●			●			●									●			●	●						
							●			●			●									●			●	●						
							●			●			●									●			●	●						
							●			●			●									●			●	●						
							●			●			●									●			●	●						
							●			●			●									●			●	●	●	●				
							●			●			●									●			●	●	●	●				
●														●																		
●														●																		
●														●																		
							●																									
		●															●															
		●															●															
		●															●															
		●															●															
							●					●				●																
							●																									
							●					●				●																
							●					●				●																
●																																
●																																
		●																														
●														●																		
●														●																		
●														●																		
							●																●						●			
		●															●															
		●															●															
		●															●															
							●					●				●							●									
							●																●							●		
							●					●				●							●									
							●					●				●							●									
●																																
		●																														
							●			●			●					●				●									●	
							●			●			●					●				●									●	
							●			●			●					●				●									●	
							●			●			●					●				●									●	
							●			●			●					●				●									●	
							●			●			●					●				●									●	
							●			●			●						●			●									●	●
							●			●			●						●			●									●	●
							●			●			●						●			●									●	●
							●			●			●						●			●									●	●
							●			●			●						●			●									●	●
							●			●			●						●			●									●	●
							●			●			●						●			●									●	
						●			●																●	●	●	●				
						●			●																●	●	●	●				
						●			●																●	●	●	●				

External Dimensions

M SERIES

Unit : mm

MSZ-LN25VG2(W)(V)(R)(B) MSZ-LN35VG2(W)(V)(R)(B)
MSZ-LN50VG2(W)(V)(R)(B) MSZ-LN60VG2(W)(V)(R)(B)

INDOOR UNIT

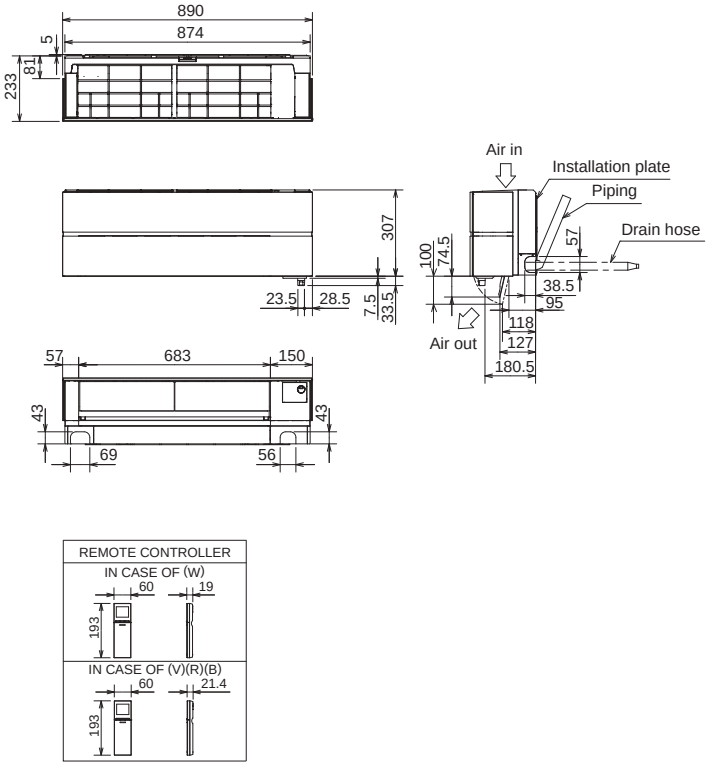

MSZ-FT25VG MSZ-FT35VG MSZ-FT50VG
MSZ-FT25VGK MSZ-FT35VGK MSZ-FT50VGK

INDOOR UNIT

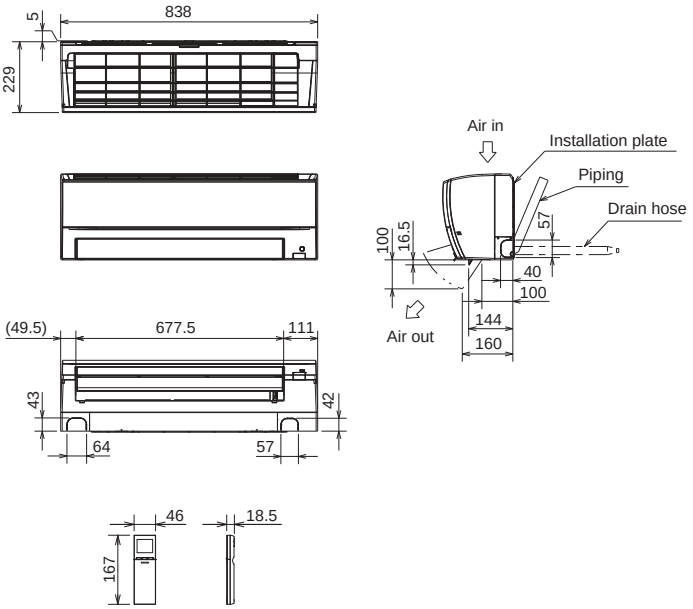

MSZ-AP15VG MSZ-AP20VG

INDOOR UNIT

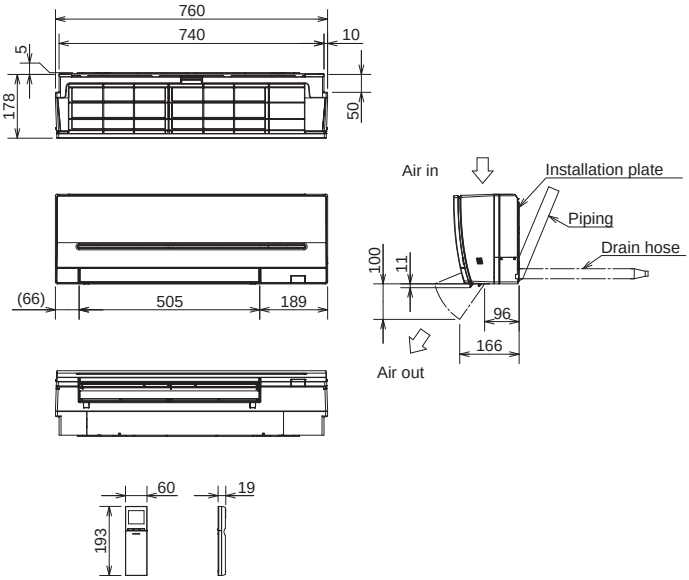

MSZ-AP25VG MSZ-AP35VG MSZ-AP42VG MSZ-AP50VG
MSZ-AP25VGK MSZ-AP35VGK MSZ-AP42VGK MSZ-AP50VGK

INDOOR UNIT

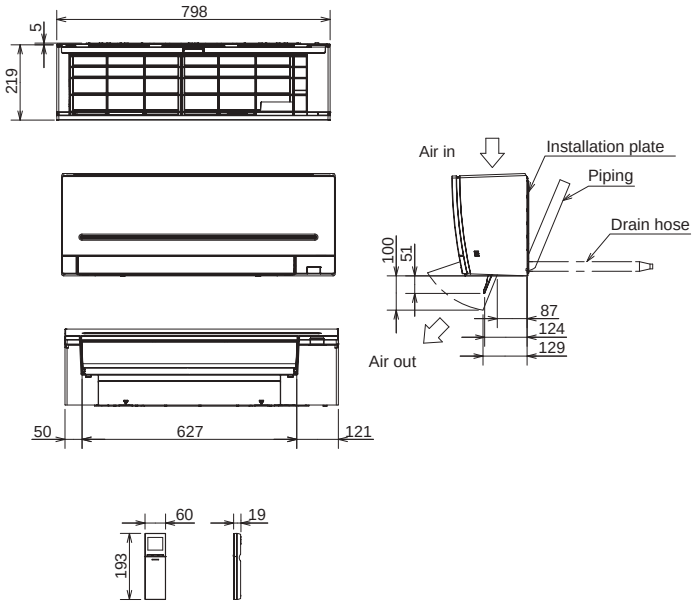

Unit : mm

MSZ-AP60VG MSZ-AP71VG
MSZ-AP60VGK MSZ-AP71VGK

INDOOR UNIT

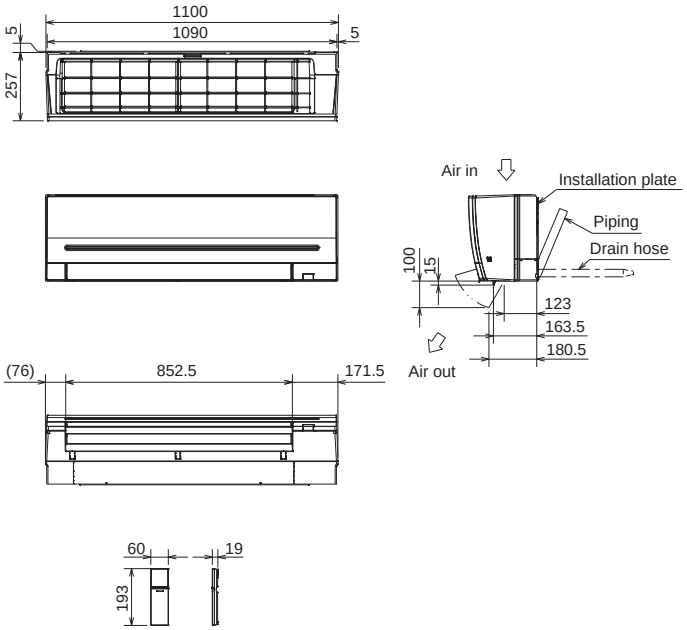

MSZ-EF18VG(W)(B)(S) MSZ-EF22VG(W)(B)(S)
MSZ-EF25VG(W)(B)(S) MSZ-EF35VG(W)(B)(S)
MSZ-EF42VG(W)(B)(S) MSZ-EF50VG(W)(B)(S)
MSZ-EF18VGK(W)(B)(S) MSZ-EF22VGK(W)(B)(S)
MSZ-EF25VGK(W)(B)(S) MSZ-EF35VGK(W)(B)(S)
MSZ-EF42VGK(W)(B)(S) MSZ-EF50VGK(W)(B)(S)

INDOOR UNIT

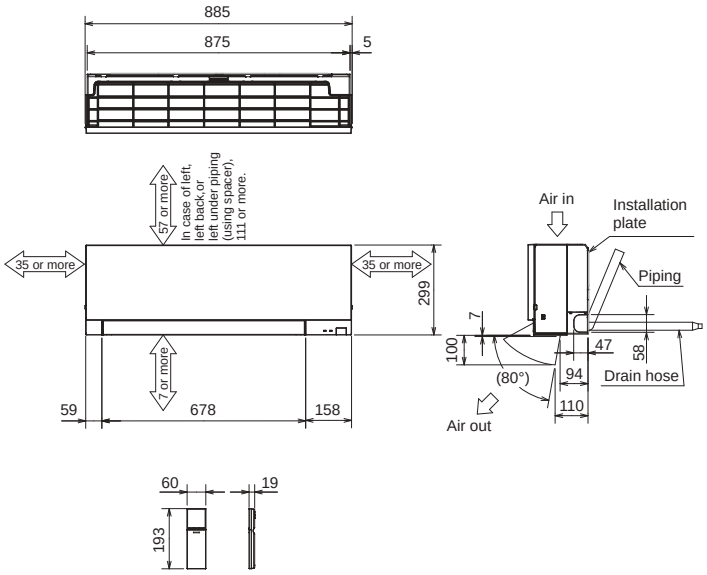

MSZ-BT20VG MSZ-BT25VG MSZ-BT35VG MSZ-BT50VG
MSZ-BT20VGK MSZ-BT25VGK MSZ-BT35VGK MSZ-BT50VGK

INDOOR UNIT

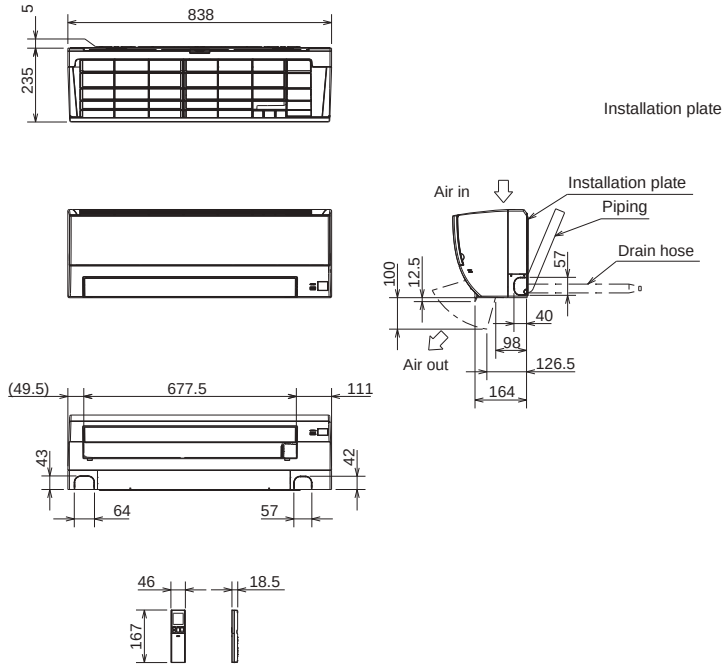

MSZ-HR25VF MSZ-HR35VF MSZ-HR42VF
MSZ-HR50VF

INDOOR UNIT

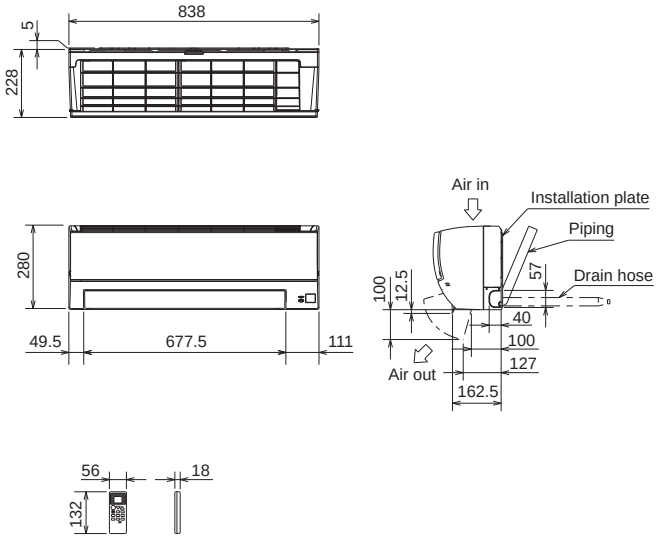

Unit : mm

MSZ-HR60VF MSZ-HR71VF

INDOOR UNIT

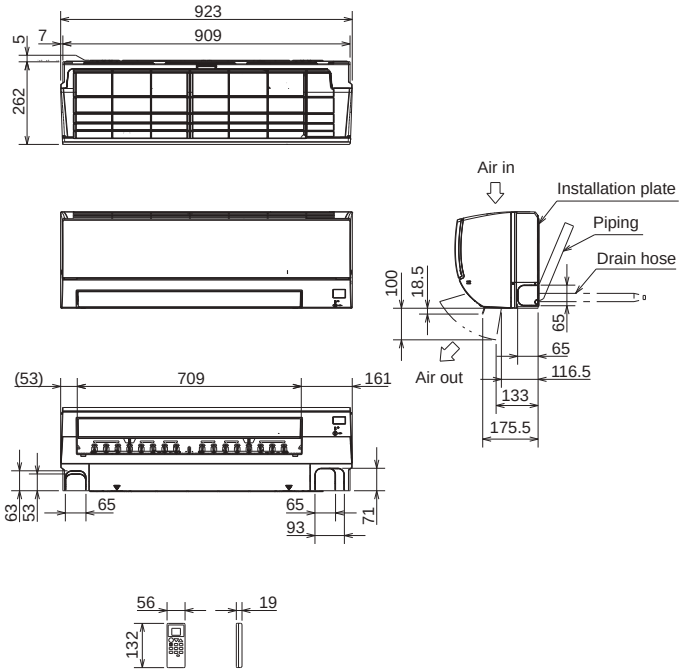

MUZ-HR25VF MUZ-HR35VF
MUZ-BT20VG MUZ-BT25VG MUZ-BT35VG

OUTDOOR UNIT

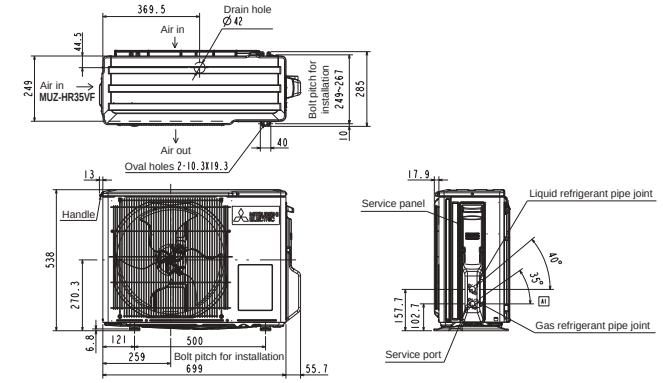

MUZ-HR42VF MUZ-HR50VF

OUTDOOR UNIT

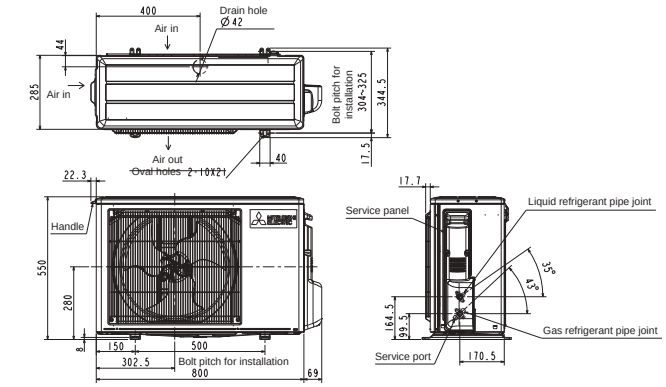

MSZ-FH25VE2 MSZ-FH35VE2 MSZ-FH50VE2

INDOOR UNIT

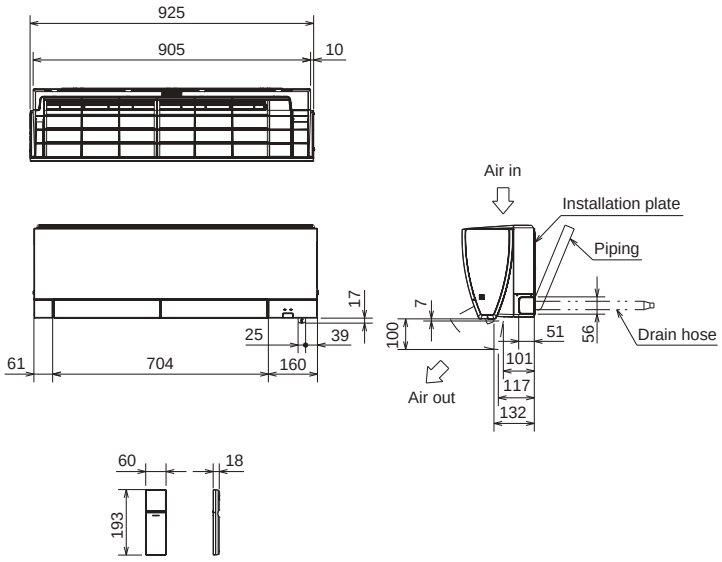

MSZ-SF15VA MSZ-SF20VA

INDOOR UNIT

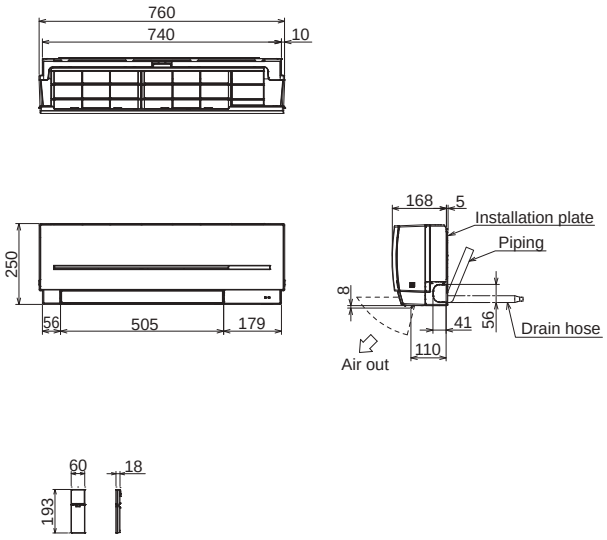

Unit : mm

MSZ-SF25VE3 MSZ-SF35VE3 MSZ-SF42VE3 MSZ-SF50VE3

INDOOR UNIT

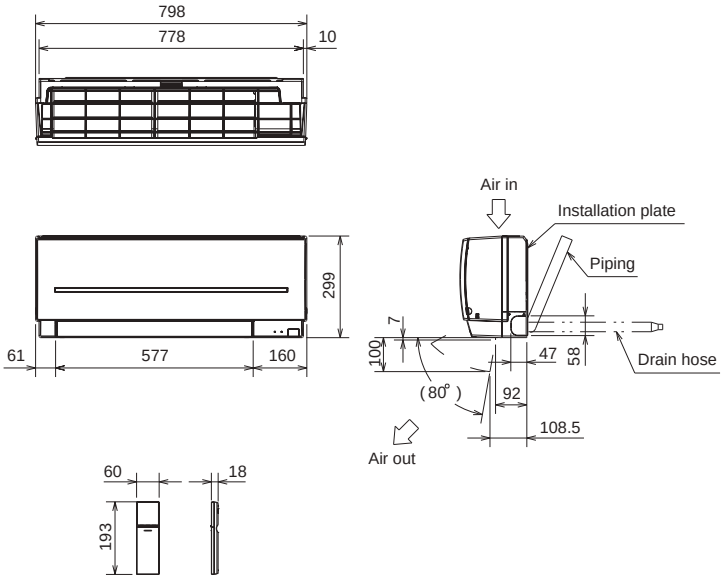

MSZ-GF60VE2 MSZ-GF71VE2

INDOOR UNIT

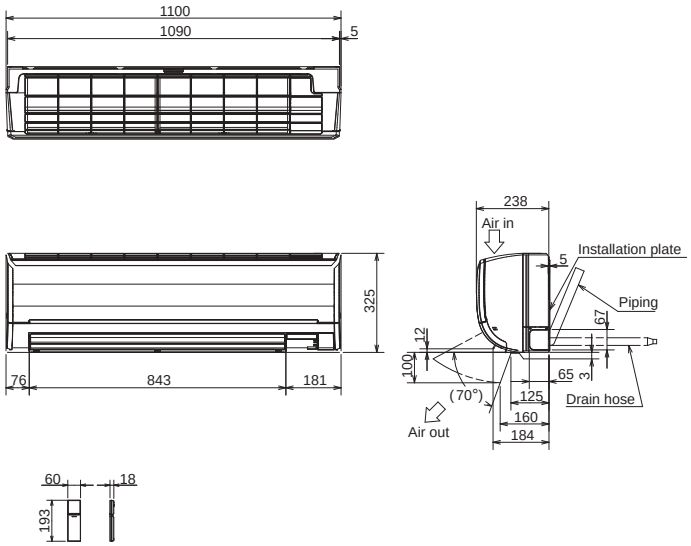

MSZ-WN25VA MSZ-WN35VA

INDOOR UNIT

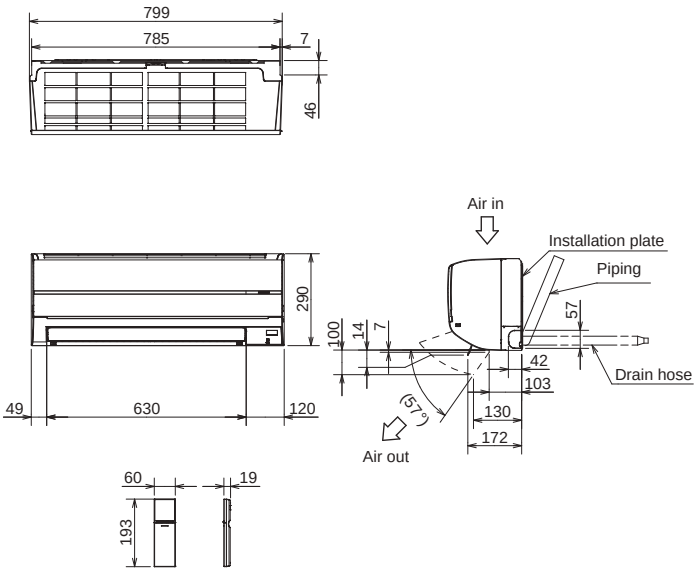

MSZ-DM25VA MSZ-DM35VA

INDOOR UNIT

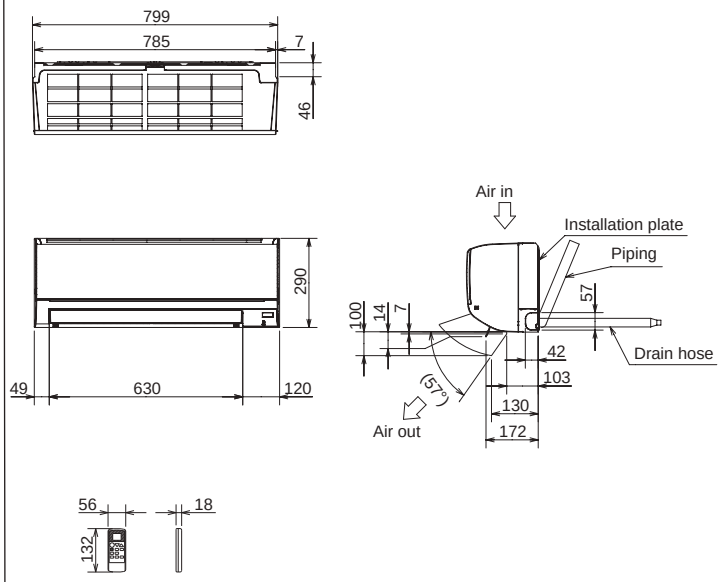

Unit : mm

MSZ-HJ25VA MSZ-HJ35VA MSZ-HJ50VA

INDOOR UNIT

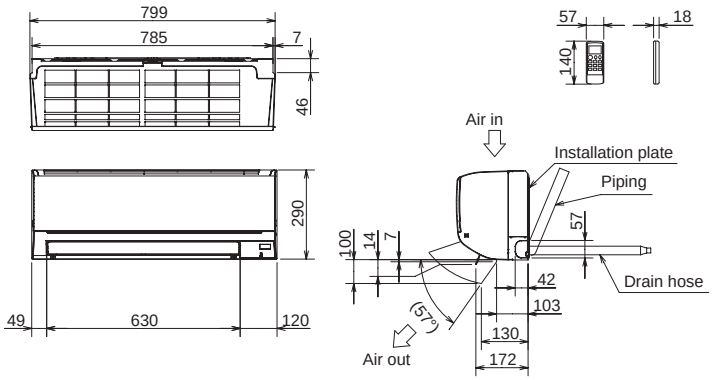

MSZ-HJ60VA MSZ-HJ71VA MSY-TP35VF MSY-TP50VF

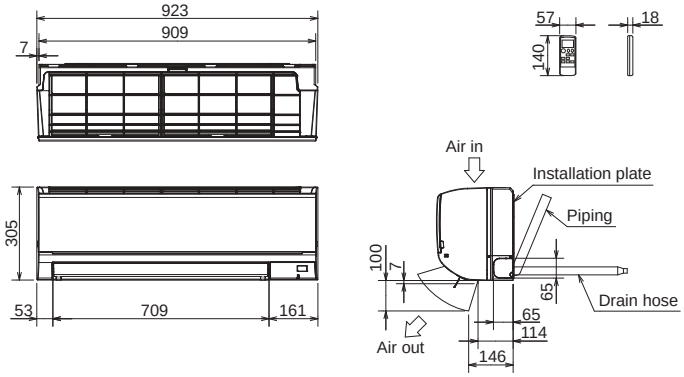

MFZ-KT25VG MFZ-KT35VG MFZ-KT50VG MFZ-KT60VG

INDOOR UNIT

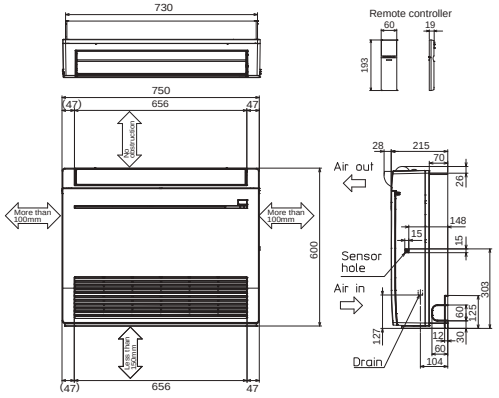

MFZ-KJ25VE2 MFZ-KJ35VE2 MFZ-KJ50VE2

INDOOR UNIT

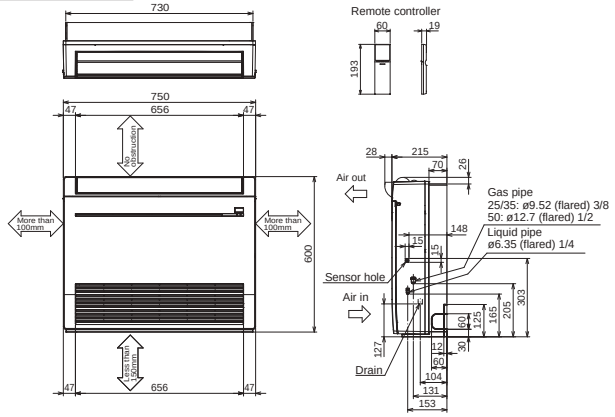

MLZ-KP25VF MLZ-KP35VF MLZ-KP50VF

INDOOR UNIT

INDOOR UNIT OUTLINE DRAWING

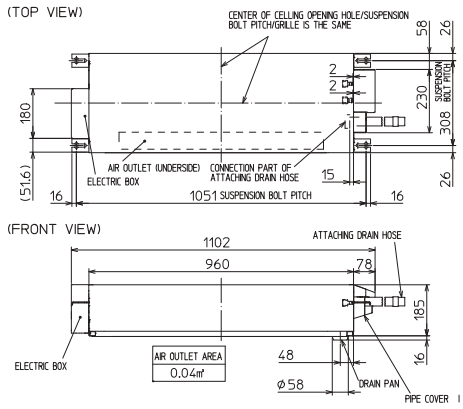

REMOTE CONTROLLER OUTLINE DRAWING

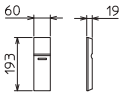

(RIGHT SIDE VIEW)

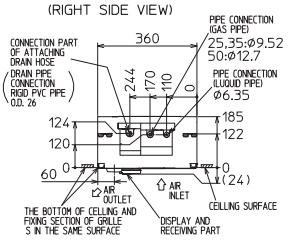

INDOOR UNIT DETAIL VIEW

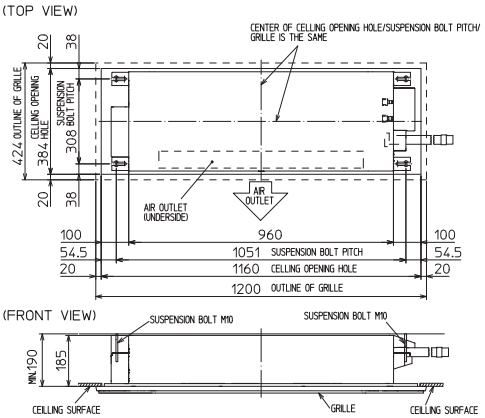

GRILLE OUTLINE DRAWING

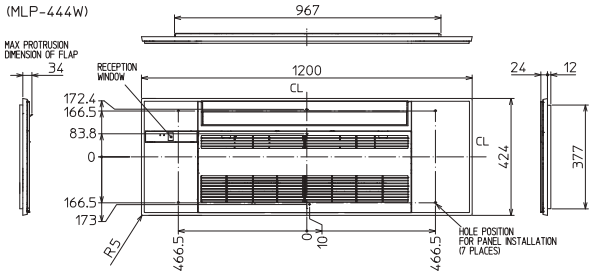

		KP25/35VF	KP50VF
EXTENSION PIPE	LIQUID PIPE O.D.	ø6.35	
	GAS PIPE O.D.	ø9.52	ø12.7
CONNECTIONG OF PIPE	LIQUID PIPE	FLARED CONNECTION ø6.35	
	GAS PIPE	FLARED CONNECTION ø9.52	FLARED CONNECTION ø12.7
DRAIN HOSE		HEAT INSULATER O.D. ø32 / CONNECTION I.D. ø25 / EFFECTIVE LENGTH 480	
DRAIN PIPE CONNECTION		RIGID PVC PIPE O.D. 26	

NOTE1. CUTTING ATTACHING DRAIN HOSE CAN BE USED.

THE METHOD FOR STANDING DRAIN FROM INDOOR UNIT
※ CUTTING ATTACHING DRAIN HOSE CAN BE USED

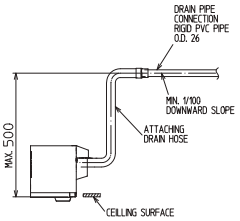

Unit : mm

MUZ-LN25VG **MUZ-LN25VGHZ**
MUZ-LN35VG **MUZ-LN35VGHZ**
MUZ-AP20VG
MUZ-AP25VG **MUZ-AP25VGH**
MUZ-AP35VG **MUZ-AP35VGH**
MUZ-AP42VG **MUZ-AP42VGH** **MUZ-HR42VF**
MUZ-FT25VGHZ **MUZ-HR50VF**
MUZ-FH25VE **MUZ-FH35VE**
MUZ-FH25VEHZ **MUZ-FH35VEHZ**
MUZ-EF25VG **MUZ-EF25VGH**
MUZ-EF35VG **MUZ-EF35VGH** **MUY-TP50VF**
MUZ-EF42VG **MUY-TP35VF** **MUZ-SF35VE**
MUZ-SF25VE **MUZ-SF25VEH** **MUZ-SF42VEH**
MUZ-SF35VEH **MUZ-SF42VE**
MUZ-HJ50VA
MUFZ-KJ25VE **MUFZ-KJ35VE**
MUFZ-KJ25VEHZ **MUFZ-KJ35VEHZ** **MUZ-BT50VG**

OUTDOOR UNIT

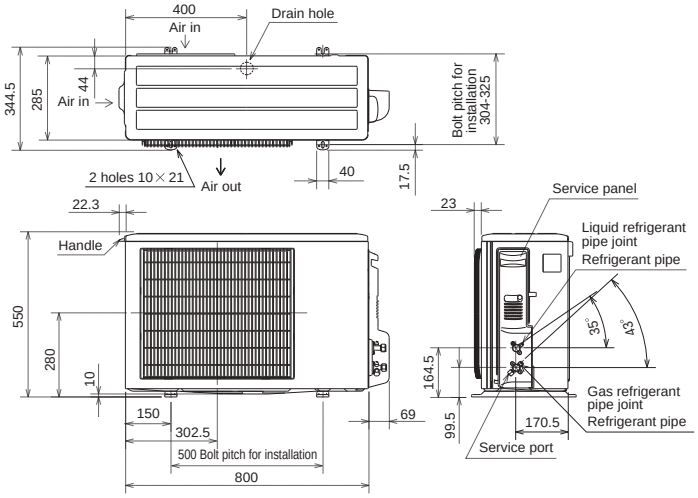

MUZ-LN50VGHZ **MUZ-LN60VG** **MUZ-AP71VG**
MUZ-FH50VE **MUZ-FH50VEHZ**
MUZ-SF50VE **MUZ-SF50VEH**
MUZ-GF60VE **MUZ-GF71VE**
MUZ-HJ60VA **MUZ-HJ71VA**
MUFZ-KJ50VE **MUFZ-KJ50VEHZ**

OUTDOOR UNIT

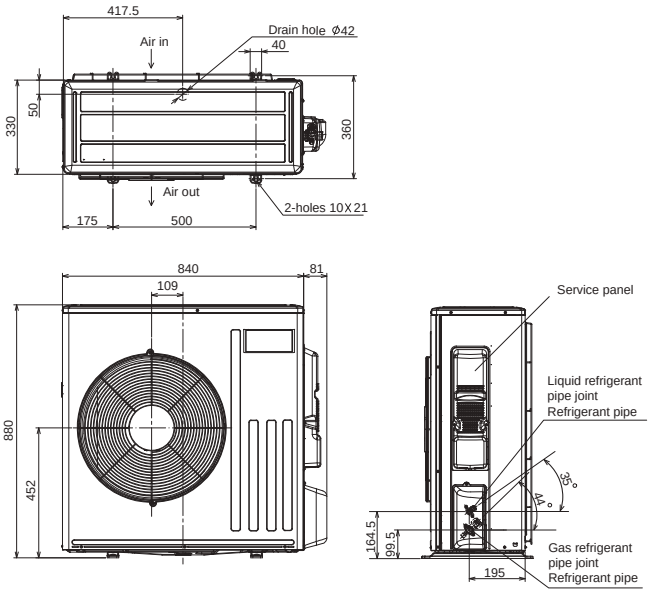

MUZ-WN25VA **MUZ-WN35VA** **MUZ-HR25VF** **MUZ-BT20VG**
MUZ-DM25VA **MUZ-DM35VA** **MUZ-HR35VF** **MUZ-BT25VG**
MUZ-HJ25VA **MUZ-HJ35VA** **MUZ-BT35VG**
MUZ-AP15VG

OUTDOOR UNIT

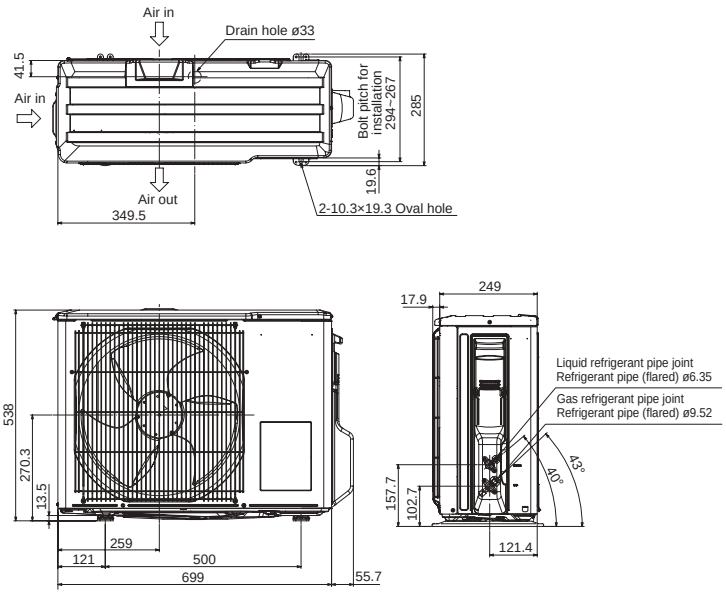

MUZ-LN50VG **MUZ-AP60VG**
MUZ-FT35/50VGHZ
MUZ-AP50VG **MUZ-AP50VGH**
MUZ-EF50VG
MUZ-HR60VF **MUZ-HR71VF**

OUTDOOR UNIT

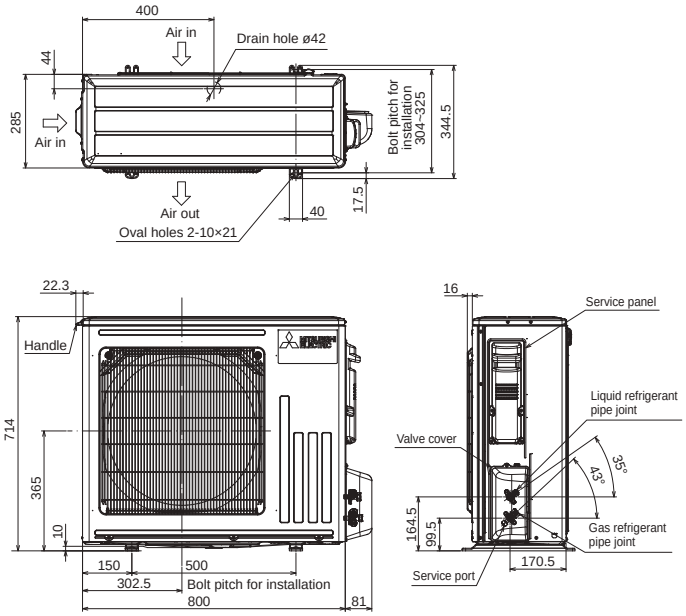

Unit : mm

SLZ-M15FA
SLZ-M25FA SLZ-M35FA
SLZ-M50FA SLZ-M60FA

INDOOR UNIT

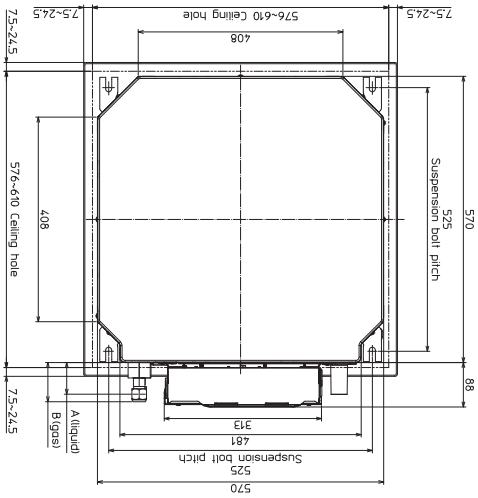

Models	① Refrigerent pipe (liquid)	② Refrigerent pipe (gas)	A	B
SLZ-M15FA SLZ-M25FA SLZ-M35FA	ϕ6.35mm flared connection 1/4F	ϕ9.52mm flared connection 3/8F	63mm	72mm
SLZ-M50FA	ϕ6.35mm flared connection 1/4F	ϕ12.7mm flared connection 1/2F	63mm	78mm
SLZ-M60FA	ϕ6.35mm flared connection 1/4F	ϕ15.88mm flared connection 5/8F	63mm	78mm

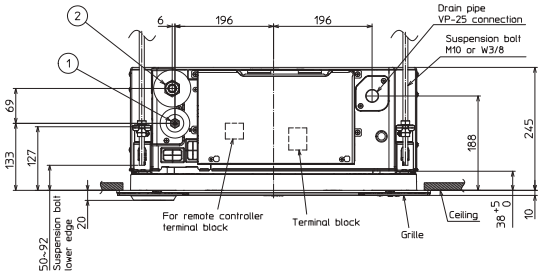

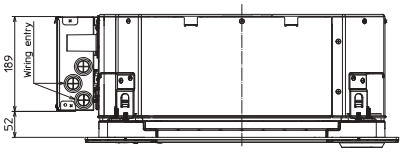

SEZ-M25DA(L) SEZ-M35DA(L) SEZ-M50DA(L)
SEZ-M60DA(L) SEZ-M71DA(L)

INDOOR UNIT

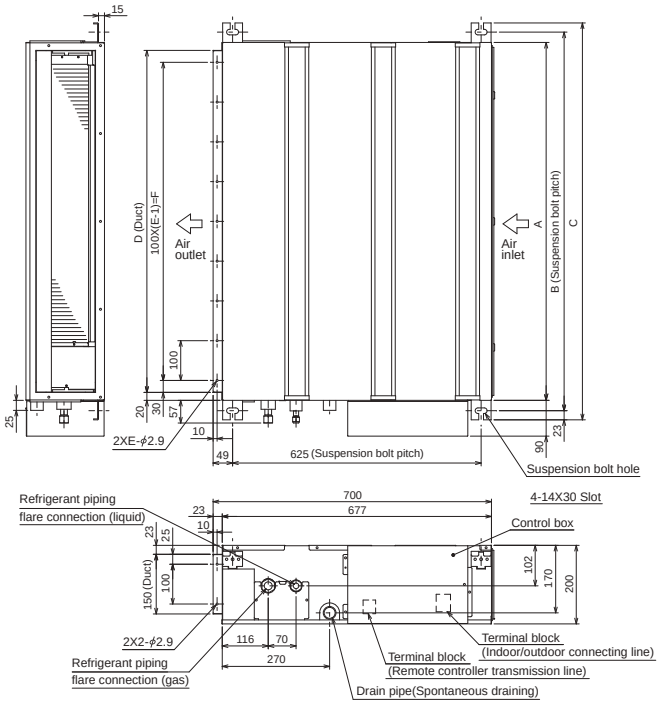

Model	A	B	C	D	E	F	G	H	J	K	L
SEZ-M25DAL/DA	700	752	798	660	7	600	800	660	5	500	16
SEZ-M35DAL/DA SEZ-M50DAL/DA	900	952	998	860	9	800	1000	860	7	700	20
SEZ-M60DAL/DA SEZ-M71DAL/DA	1100	1152	1198	1060	11	1000	1200	1060	9	900	24

Notes:
1. Use M10 bolts for suspension (purchase locally).
2. Keep service space for maintenance at the bottom.
3. This chart is based on the SEZ-M50DAL/DA, which has three fans.
   SEZ-M25, 35DAL/DA has two fans, and SEZ-M60, 71DAL/DA has four fans.
4. If an inlet duct is used, remove the air filter supplied with the unit, and install a locally purchased filter on the suction side.

SUZ-M25VA SUZ-M35VA

OUTDOOR UNIT

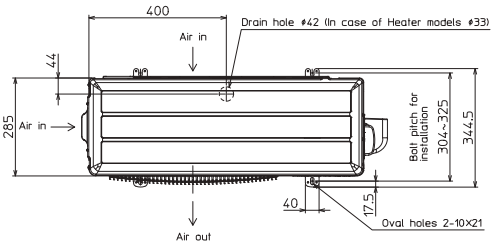

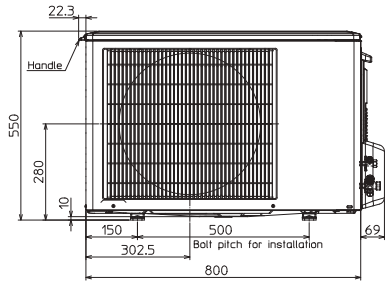

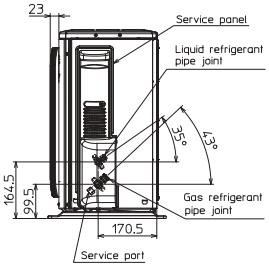

SUZ-M50VA

OUTDOOR UNIT

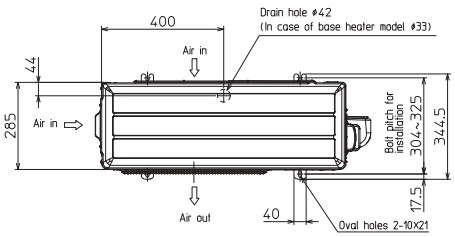

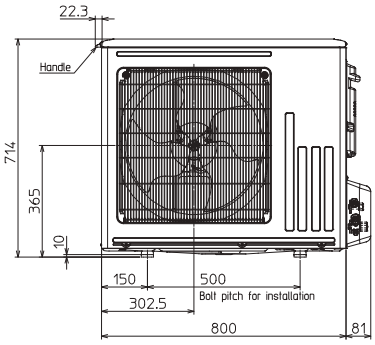

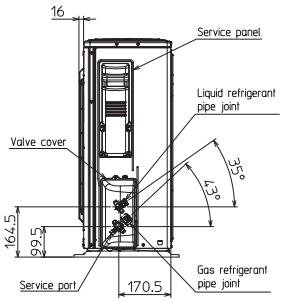

SUZ-M60VA SUZ-M71VA

INDOOR UNIT

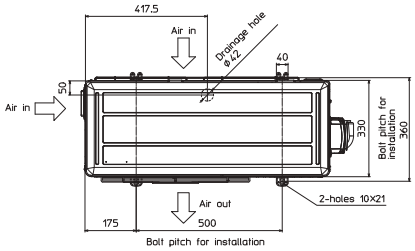

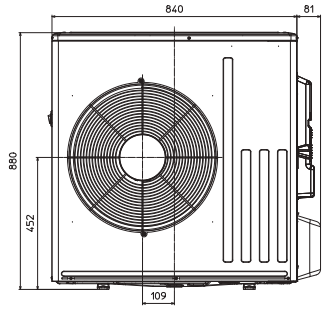

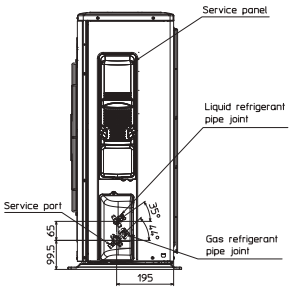

SUZ-KA25VA6 SUZ-KA35VA6

INDOOR UNIT

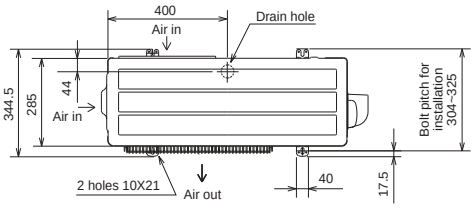

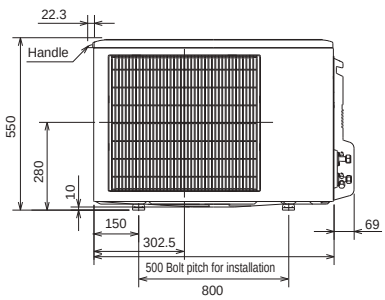

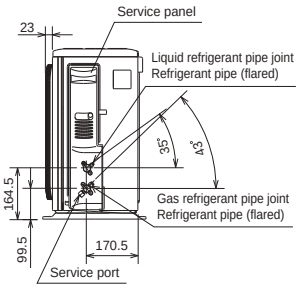

SUZ-KA50VA6 SUZ-KA60VA6 SUZ-KA71VA6

INDOOR UNIT

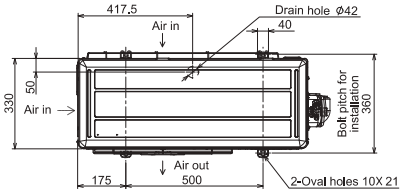

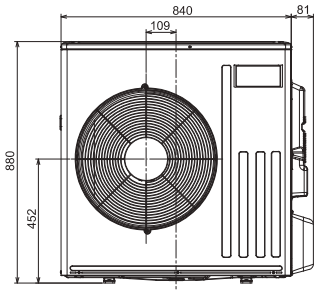

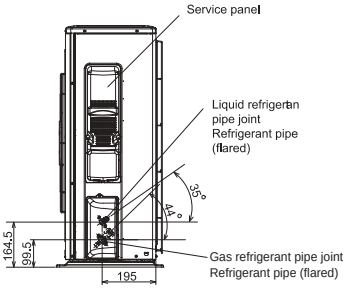

Unit : mm

PLA-ZM35EA PLA-ZM50EA PLA-ZM60EA PLA-ZM71EA PLA-ZM100EA PLA-ZM125EA PLA-ZM140EA PLA-M35EA PLA-M50EA PLA-M60EA PLA-M71EA PLA-M100EA PLA-M125EA PLA-M140EA

INDOOR UNIT

PLA-ZM35/50/60/71/100/125/140EA
PLA-RP35/50/60/71/100/125/140EA

ZM	①	②	A	B	C	D	E	F
35/50	REFRIGERANT PIPE ø6.35 FLARED CONNECTION 1/4F	REFRIGERANT PIPE ø12.7 FLARED CONNECTION 1/2F	241	258	76	76.5	265 OR MORE	3500 OR LESS
60	REFRIGERANT PIPE ø9.52 FLARED CONNECTION 3/8F	REFRIGERANT PIPE ø15.88 FLARED CONNECTION 5/8F			79.5	79.5		
71			281	298			305 OR MORE	4500 OR LESS
100-140								

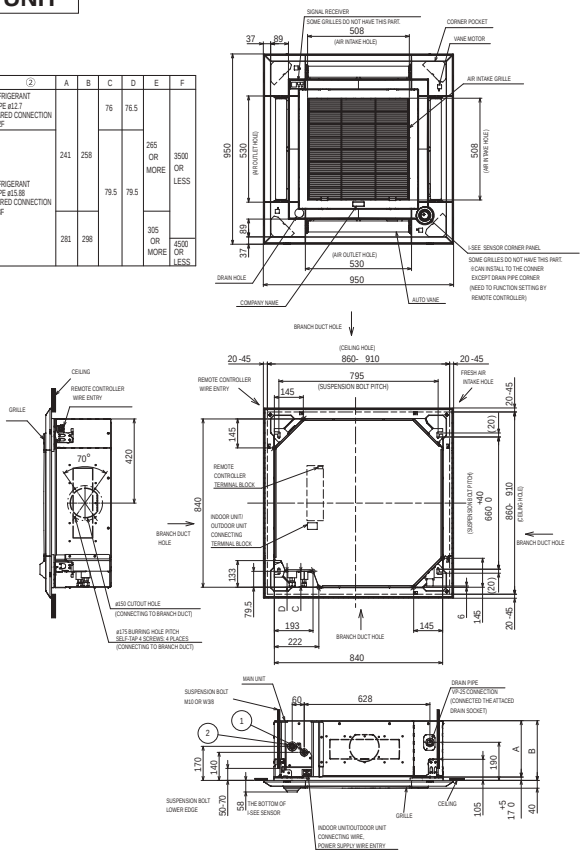

PKA-M35HA(L) PKA-M50HA(L)

INDOOR UNIT

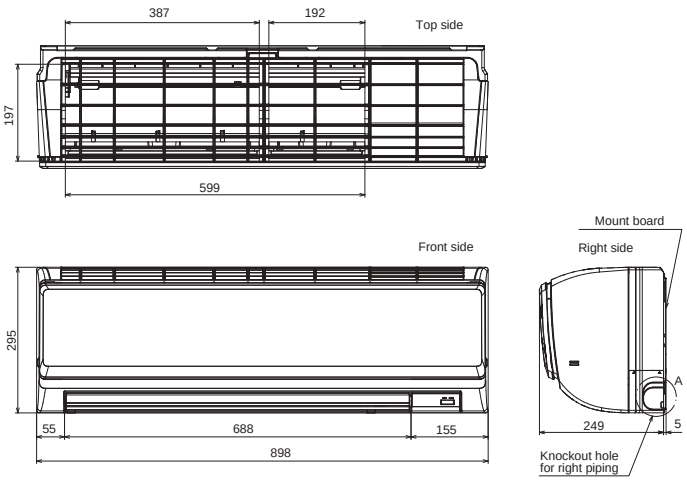

PKA-M60KA(L) PKA-M71KA(L) PKA-M100KA(L)

INDOOR UNIT

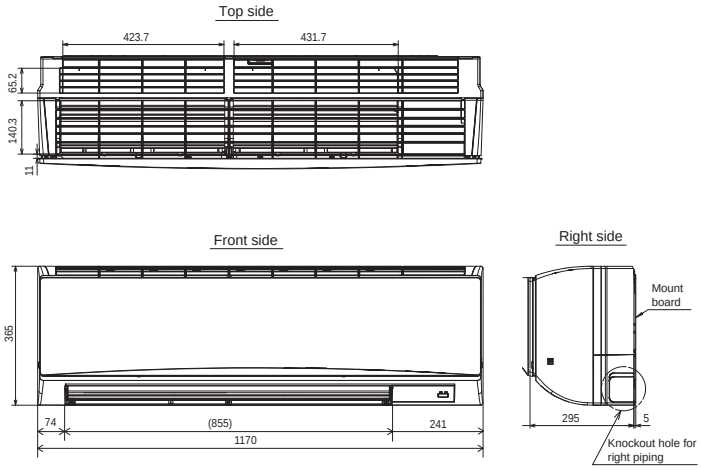

PCA-M35KA PCA-M50KA

INDOOR UNIT

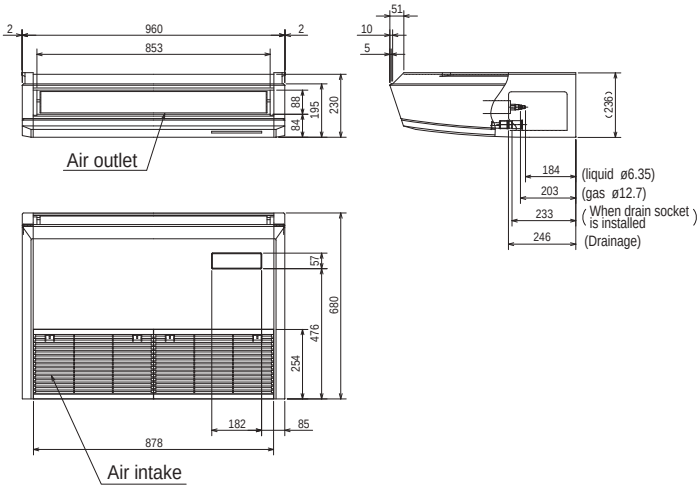

NOTES.
1.Use M10 or W3/8 screw for anchor bolt.
2.Please be sure when installing the drain pump (option parts), refrigerant pipe will be only upward.

Unit : mm

PCA-M60KA PCA-M71KA

INDOOR UNIT

	M60	M71
A	179	180
B	203	200

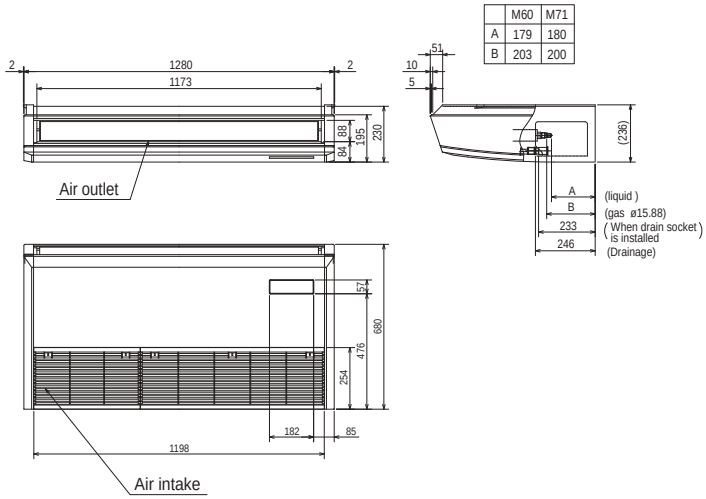

NOTES.
1.Use M10 or W3/8 screw for anchor bolt.
2.Please be sure when installing the drain pump (option parts), refrigerant pipe will be only upward.

Use the current nuts meeting the pipe size of the outdoor unit.
Available pipe size

PCA-M100KA PCA-M125KA PCA-M140KA

INDOOR UNIT

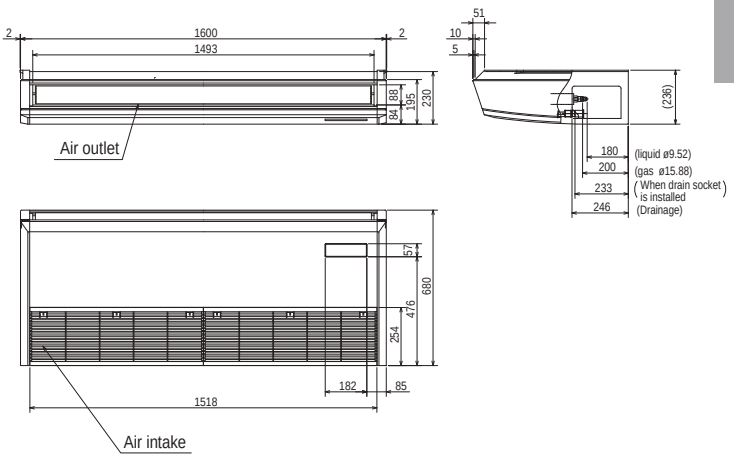

NOTES.
1.Use M10 or W3/8 screw for anchor bolt.
2.Please be sure when installing the drain pump (option parts), refrigerant pipe will be only upward.

PCA-M71HA

INDOOR UNIT

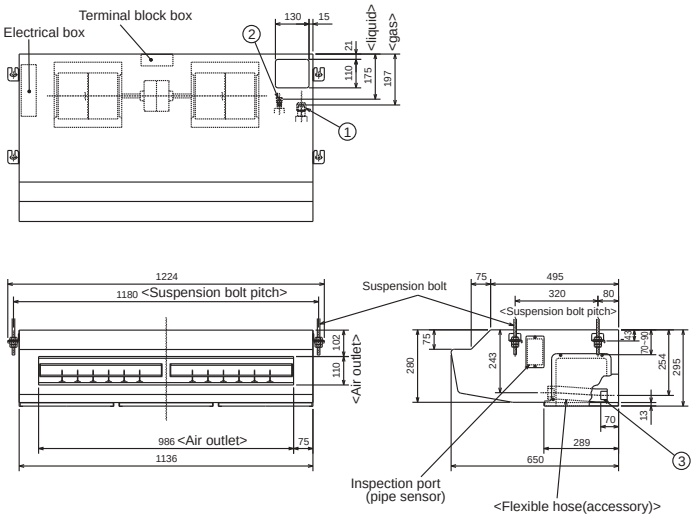

①Refrigerant pipe connection(gas pipe side/flared connection)
②Refrigerant pipe connection(liquid pipe side/flared connection)
③Flexible hose(accessory) →Drainage pipe connection

PSA-RP71KA PSA-RP100KA PSA-RP125KA PSA-RP140KA

INDOOR UNIT

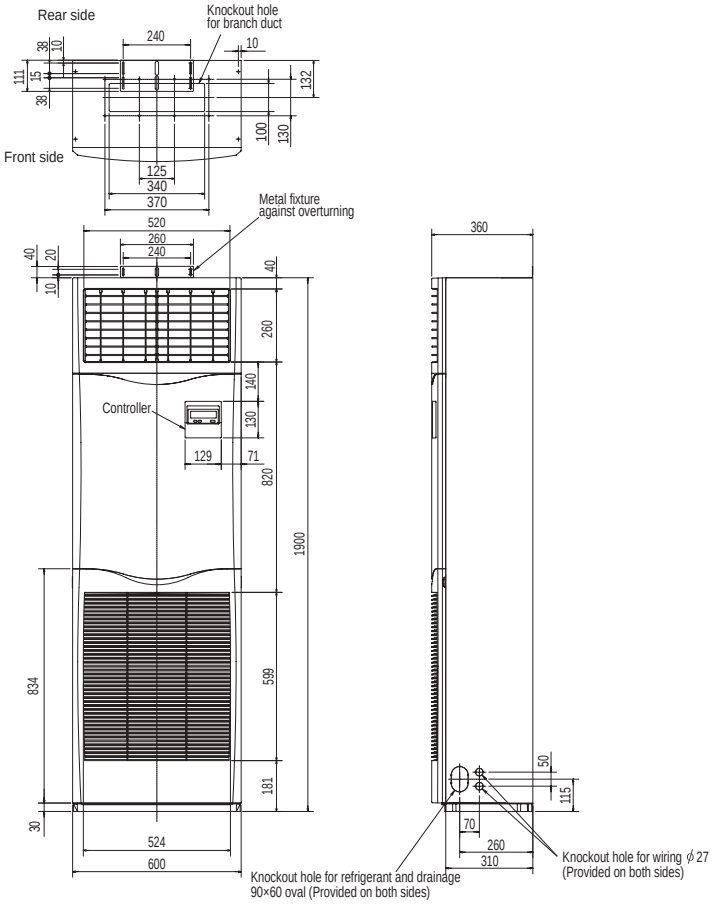

Unit : mm

PEAD-M35JA PEAD-M50JA PEAD-M60JA PEAD-M71JA PEAD-M100JA PEAD-M125JA PEAD-M140JA

INDOOR UNIT

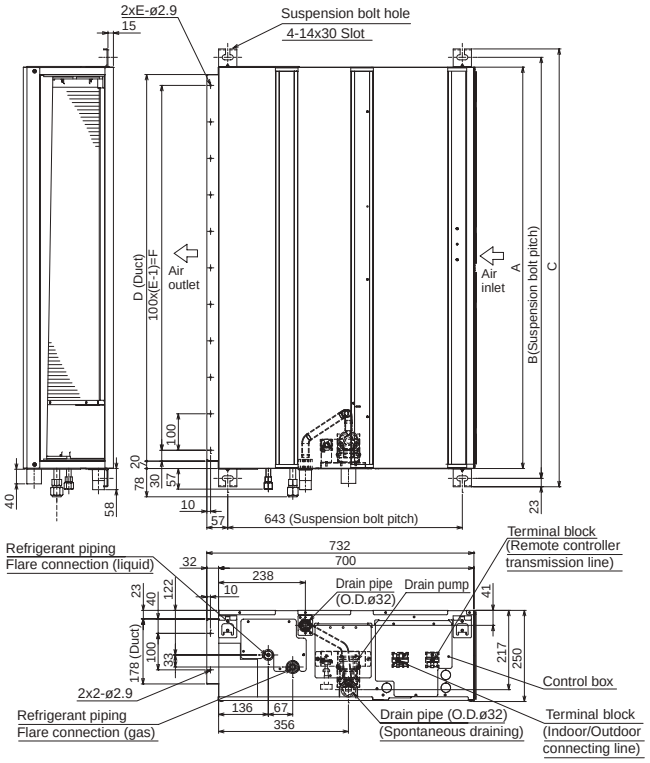

Model	A	B	C	D	E	F	G
PEAD-M35, 50JA	900	954	1000	860	9	800	858
PEAD-M60JA	1100	1154	1200	1060	11	1000	1058
PEAD-M71JA							
PEAD-M100, 125JA	1400	1454	1500	1360	14	1300	1358
PEAD-M140JA	1600	1654	1700	1560	16	1500	1558

PEAD-M35JAL PEAD-M50JAL PEAD-M60JAL PEAD-M71JAL PEAD-M100JAL PEAD-M125JAL PEAD-M140JAL

INDOOR UNIT

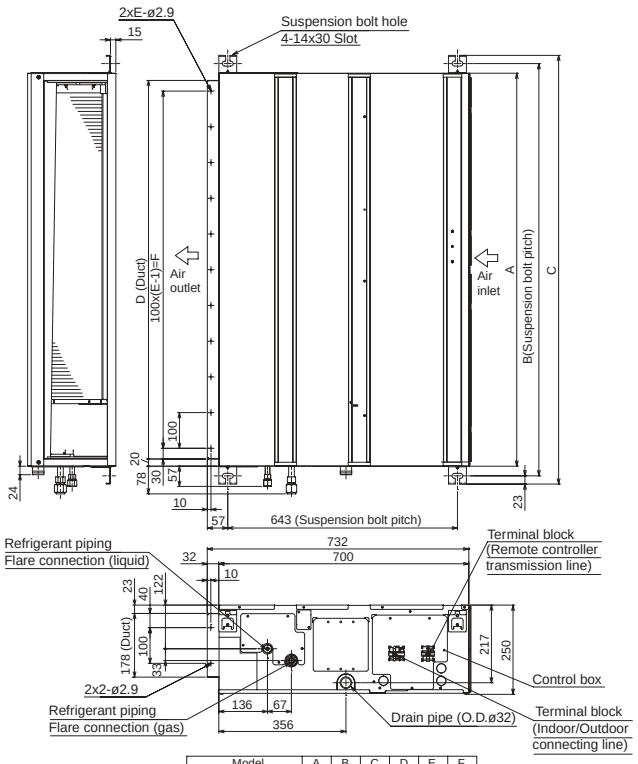

Model	A	B	C	D	E	F
PEAD-M35, 50JAL	900	954	1000	860	9	800
PEAD-M60JAL	1100	1154	1200	1060	11	1000
PEAD-M71JAL						
PEAD-M100, 125JAL	1400	1454	1500	1360	14	1300
PEAD-M140JAL	1600	1654	1700	1560	16	1500

PEA-RP200WKA PEA-RP250WKA

INDOOR UNIT

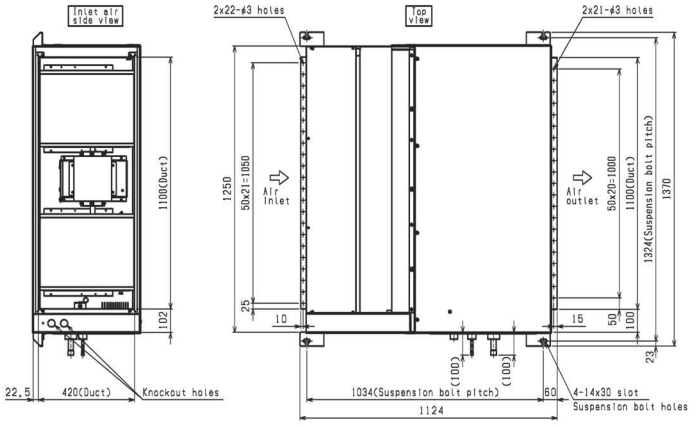

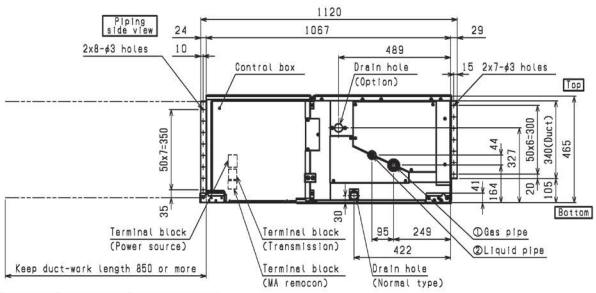

MODEL	①Gas pipe	②Liquid pipe	③Drain hose
PEA-RP200WKA	ø25.4	ø9.52	Drain hose 32mm <flexible joint> <accessory>
PEA-RP250WKA		ø12.7	

Unit : mm

PUHZ-SHW112VHA PUHZ-SHW112YHA PUHZ-SHW140YHA

OUTDOOR UNIT

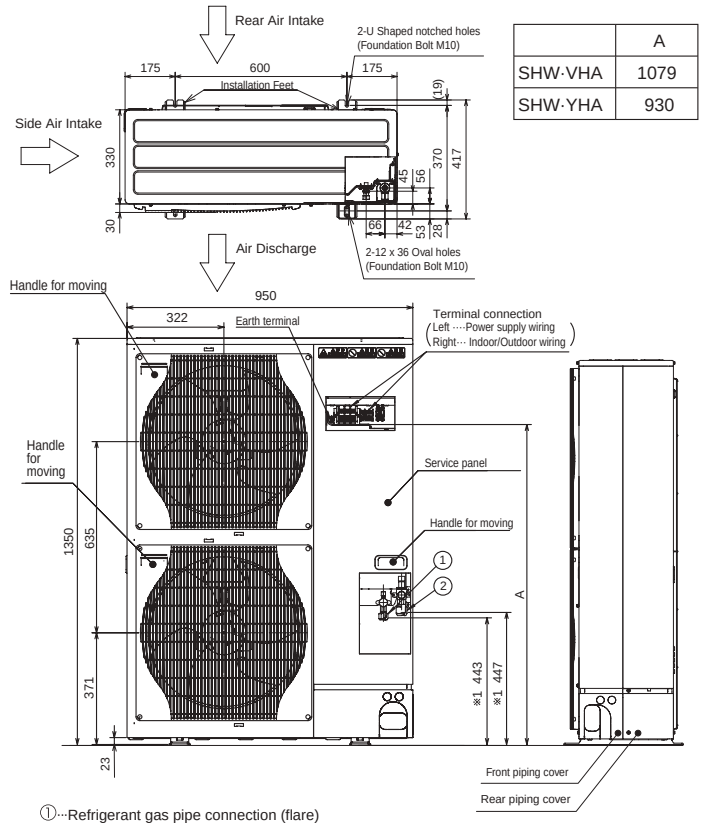

	A
SHW·VHA	1079
SHW·YHA	930

①···Refrigerant gas pipe connection (flare)
②···Refrigerant liquid pipe connection (flare)
※ ···Indicates stop valve connection location.

PUZ-ZM35VKA PUZ-ZM50VKA

OUTDOOR UNIT

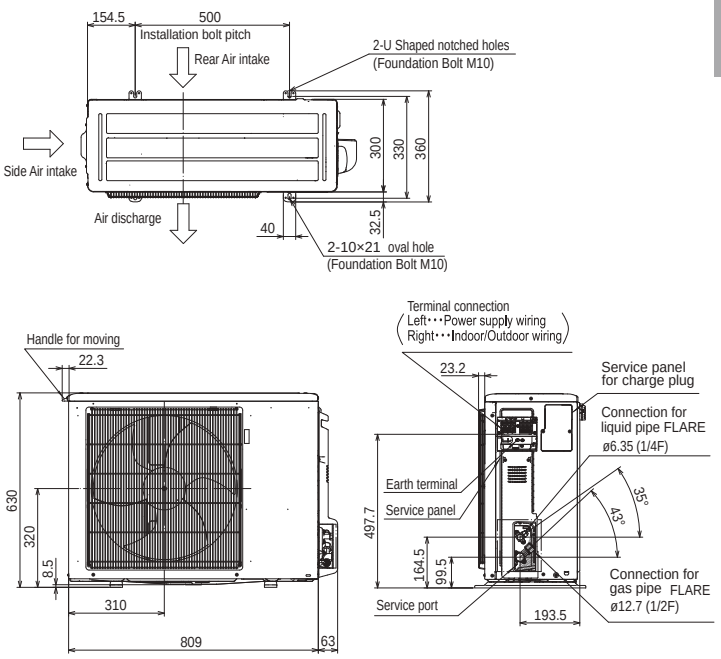

PUZ-ZM60VHA PUZ-ZM71VHA

OUTDOOR UNIT

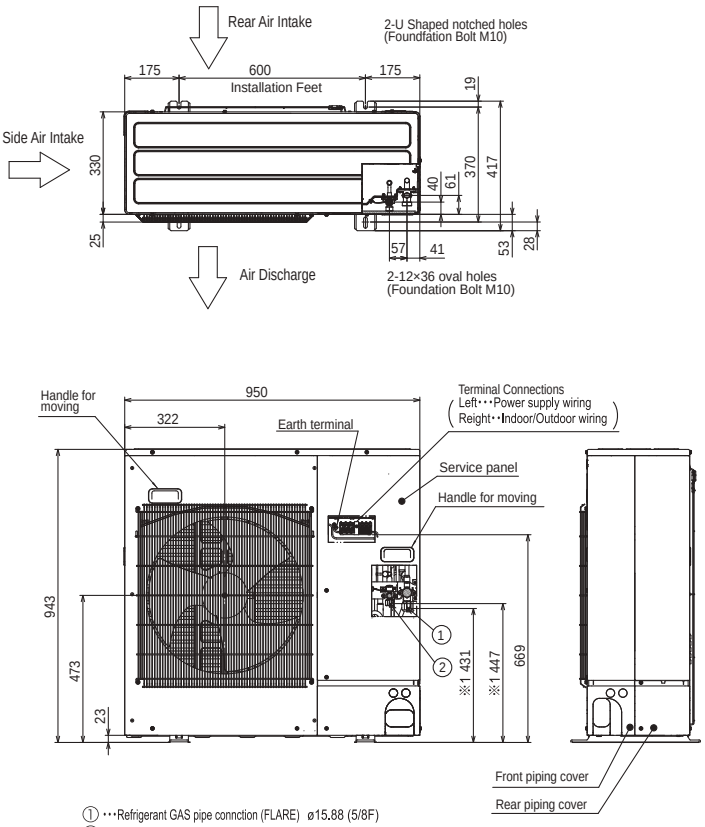

① ···Refrigerant GAS pipe connction (FLARE) ø15.88 (5/8F)
② ···Refrigerant LIQUID pipe connection (FLARE) ø9.52 (3/8F)
※ 1 ···Indication of STOP VALVE connection location.

PUZ-ZM100VKA PUZ-ZM125VKA PUZ-ZM140VKA PUZ-ZM100YKA PUZ-ZM125YKA PUZ-ZM140YKA

OUTDOOR UNIT

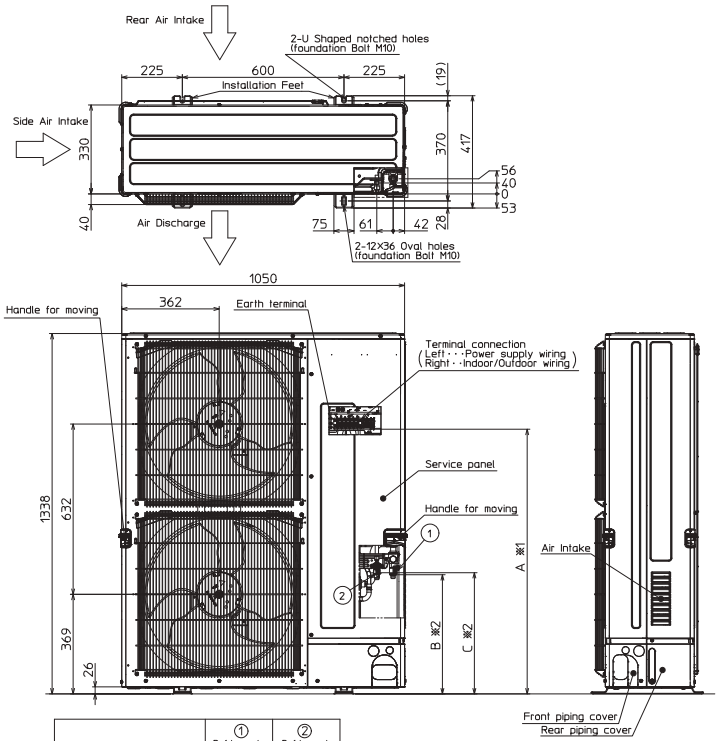

Model	① Refrigerant GAS pipe connection	② Refrigerant LIQUID pipe connection
PUZ-ZM100~140VKA.UK	ø15.88 (5/8F)	ø9.52 (3/8F)

Model	A	B	C
PUZ-ZM100~140VKA.UK	1067	442	450
PUZ-ZM100~140YKA.UK	919	442	450

※1···Indication of Terminal connection location.
※2···Indication of STOP VALVE connection location.

Unit : mm

PUZ-ZM200YKA PUHZ-ZM250YKA

OUTDOOR UNIT

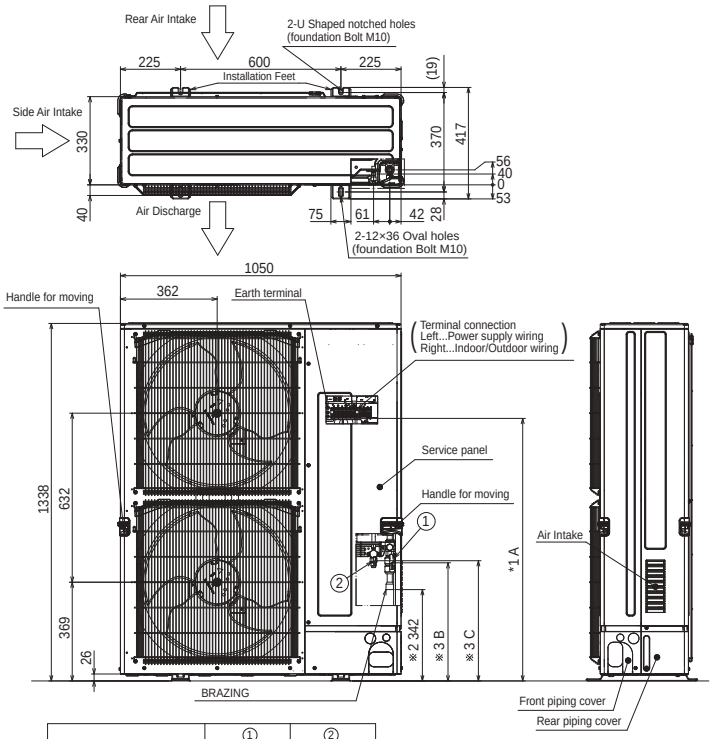

Model	① Refrigerant GAS pipe connection	② Refrigerant LIQUID pipe connection
PUZ-ZM/M200YKA.UK	ø19.05 (3/4F)	ø9.52 (3/8F)
PUZ-ZM/M250YKA.UK	ø19.05 (3/4F)	ø12.7 (1/2F)

Model	A	B	C
PUZ-ZM/M200,250YKA.UK	985	442	450

※1...Indication of Terminal connection location.
※2...Refrigerant GAS PIPE connection (BRAZING) O.Dø25.4.
※3...Indication of STOP VALVE connection location.

PUHZ-ZRP200YKA3 PUHZ-ZRP250YKA3

OUTDOOR UNIT

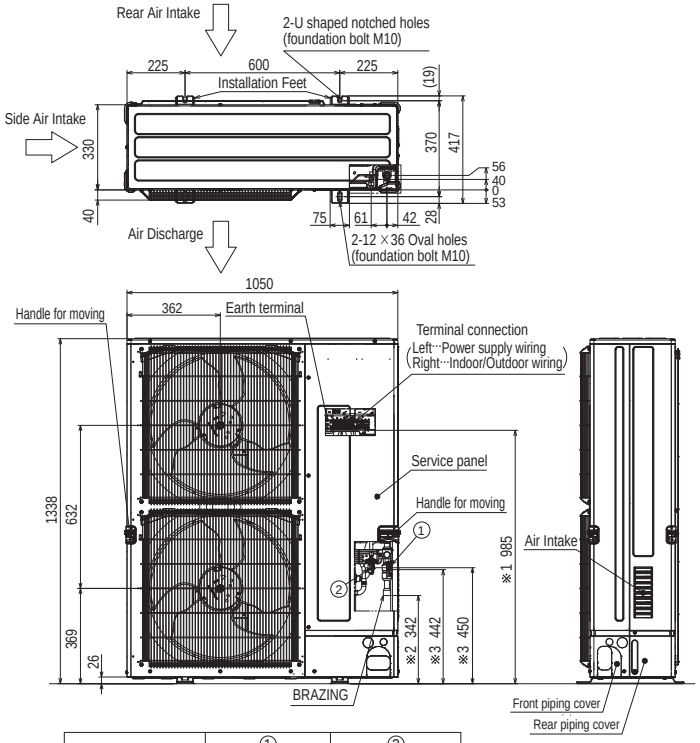

Model	① Refrigerant GAS pipe connection	② Refrigerant LIQUID pipe connection
PUHZ-ZRP200YKA3	ø19.05 (3/4F)	ø9.52 (3/8F)
PUHZ-ZRP250YKA3	ø19.05 (3/4F)	ø12.7 (1/2F)

※1···Indication of Terminal connection location.
※2···Refrigerant GAS pipe connection (BRAZING) O.Dø25.4.
※3···Indication of STOP VALVE connection location.

PUZ-M100VKA PUZ-M100YKA
PUZ-M125VKA PUZ-M125YKA
PUZ-M140VKA PUZ-M140YKA

OUTDOOR UNIT

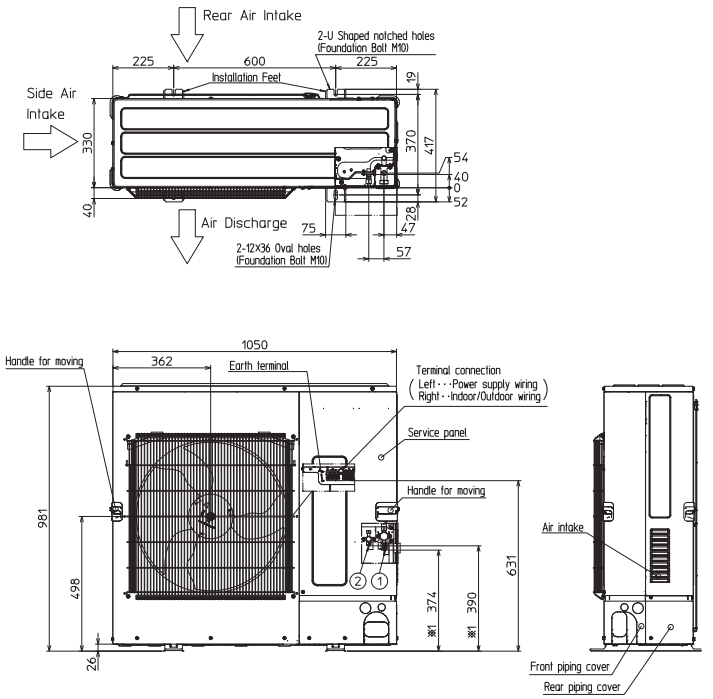

Example Of Notes

① ···Refrigerant GAS pipe connection (FLARE) ø15.88 (5/8F)
② ···Refrigerant LIQUID pipe connection (FLARE) ø9.52 (3/8F)
※1 ···Indication of STOP VALVE connection location.

PUHZ-P100VKA PUHZ-P100YKA
PUHZ-P125VKA PUHZ-P125YKA
PUHZ-P140VKA PUHZ-P140YKA

OUTDOOR UNIT

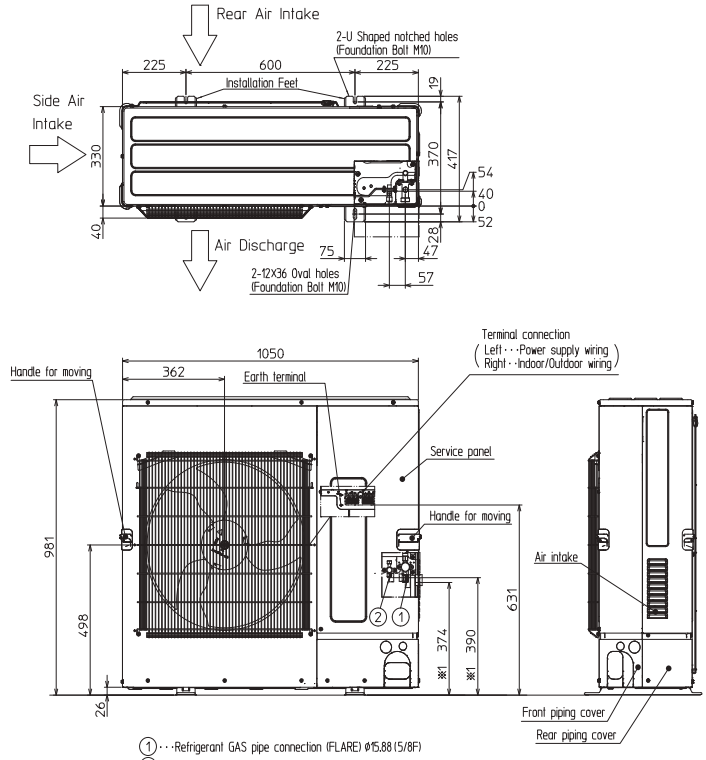

① ···Refrigerant GAS pipe connection (FLARE) ø15.88 (5/8F)
② ···Refrigerant LIQUID pipe connection (FLARE) ø9.52 (3/8F)
※1 ···Indication of STOP VALVE connection location.

Unit : mm

PUZ-M200YKA PUZ-M250YKA

OUTDOOR UNIT

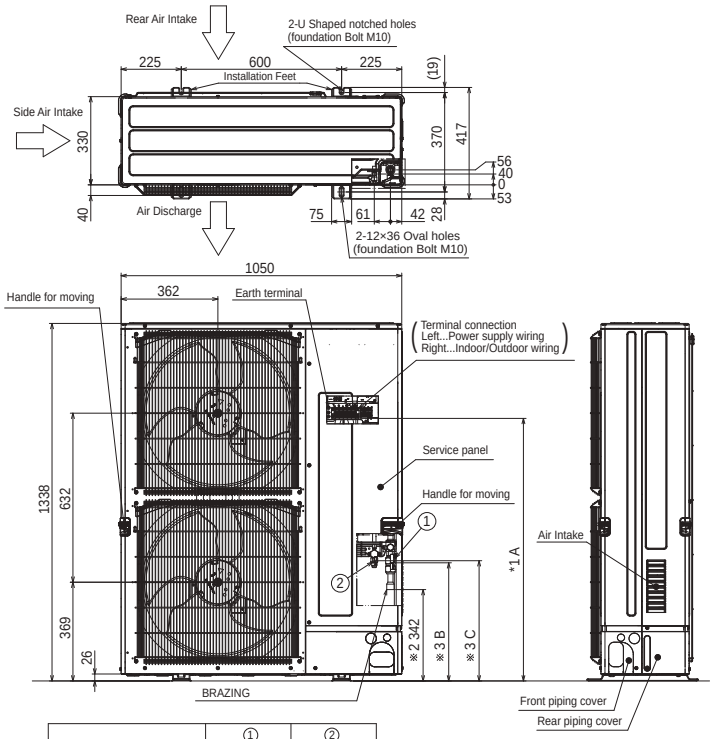

Model	① Refrigerant GAS pipe connection	② Refrigerant LIQUID pipe connection
PUZ-ZM/M200YKA.UK	ø19.05 (3/4F)	ø9.52 (3/8F)
PUZ-ZM/M250YKA.UK	ø19.05 (3/4F)	ø12.7 (1/2F)

Model	A	B	C
PUZ-ZM/M200,250YKA.UK	985	442	450

※1...Indication of Terminal connection location.
※2...Refrigerant GAS PIPE connection (BRAZING) O.Dø25.4.
※3...Indication of STOP VALVE connection location.

PUHZ-P200YKA3 PUHZ-P250YKA3

OUTDOOR UNIT

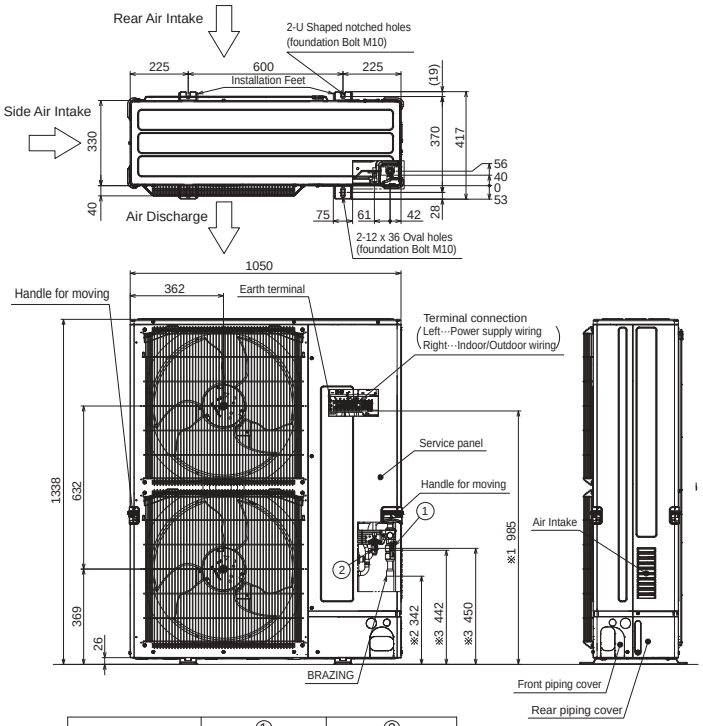

Model	① Refrigerant GAS pipe connection	② Refrigerant LIQUID pipe connection
PUHZ-P200YKA3	ø19.05 (3/4F)	ø9.52 (3/8F)
PUHZ-P250YKA3	ø19.05 (3/4F)	ø12.7 (1/2F)

※1···Indication of Terminal connection location.
※2···Refrigerant GAS pipe connection (BRAZING) O.Dø25.4.
※3···Indication of STOP VALVE connection location.

Unit : mm

MXZ-2D33VA MXZ-2D42VA2 MXZ-2D53VA2 MXZ-2D53VAH2 MXZ-2DM40VA MXZ-2HA40VF MXZ-2HA50VF MXZ-2F33VF3 MXZ-2F42VF3 MXZ-2F53VF3 MXZ-2F53VFH3

OUTDOOR UNIT

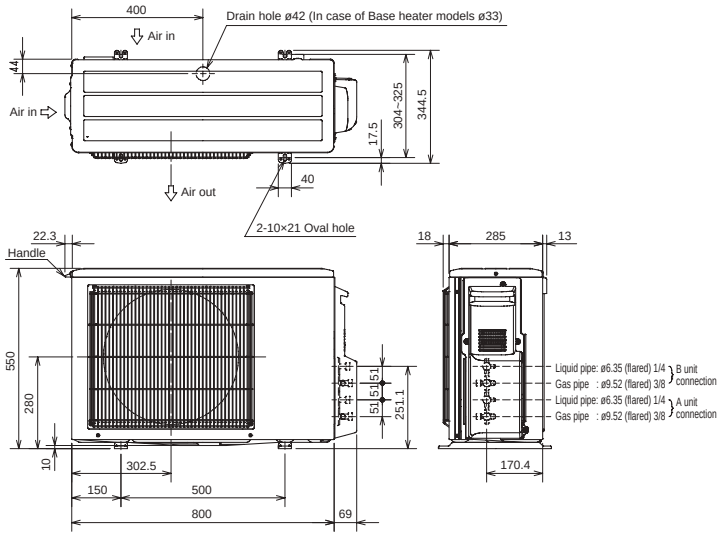

MXZ-2E53VAHZ MXZ-2F53VFHZ

OUTDOOR UNIT

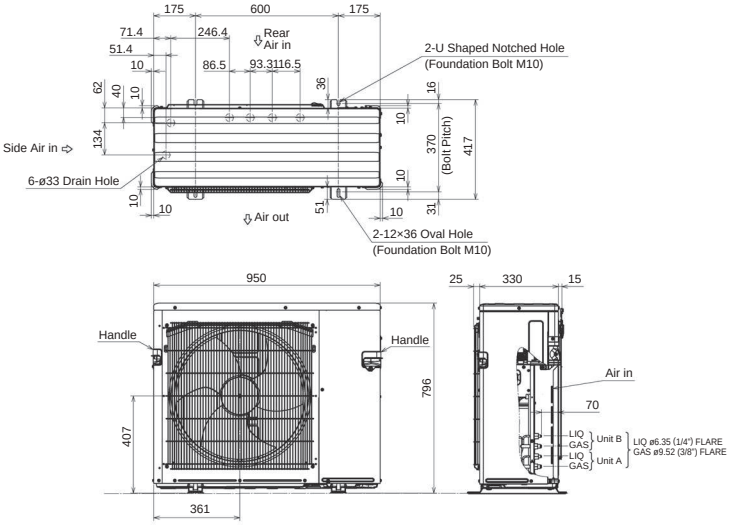

MXZ-3E54VA MXZ-3E68VA MXZ-3DM50VA MXZ-3HA50VF MXZ-3F54VF3 MXZ-3F68VF3

OUTDOOR UNIT

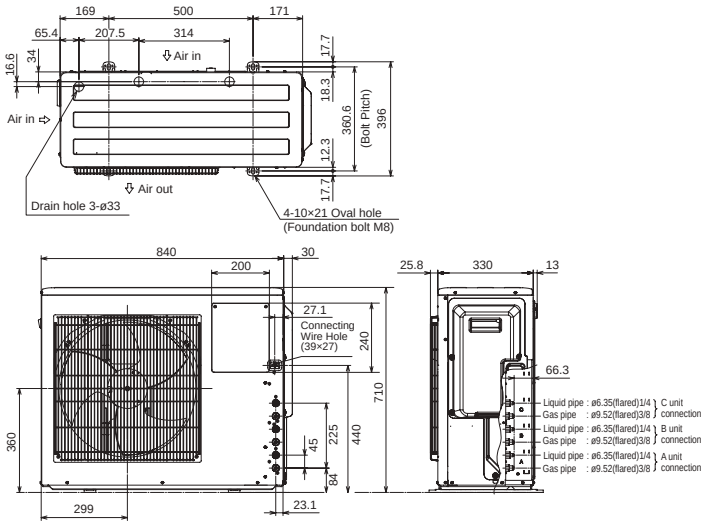

MXZ-4E72VA MXZ-4F72VF3 MXZ-4F80VF3

OUTDOOR UNIT

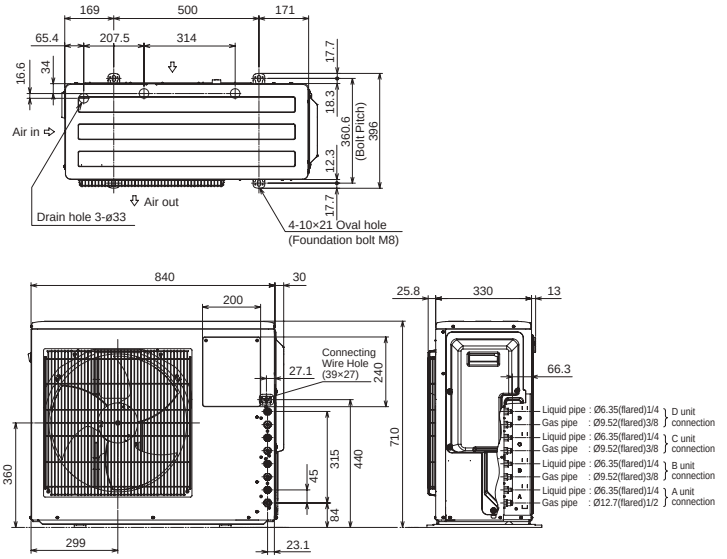

Unit : mm

MXZ-4E83VA MXZ-5E102VA MXZ-4F83VF MXZ-5F102VF

OUTDOOR UNIT

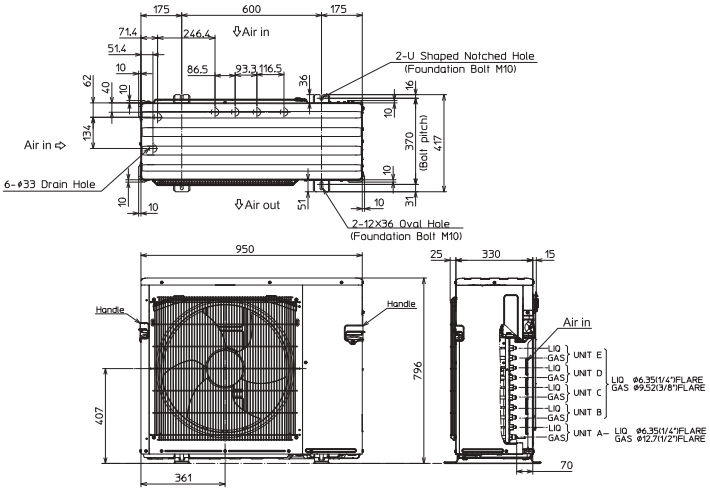

MXZ-4E83VAHZ MXZ-4F83VFHZ

OUTDOOR UNIT

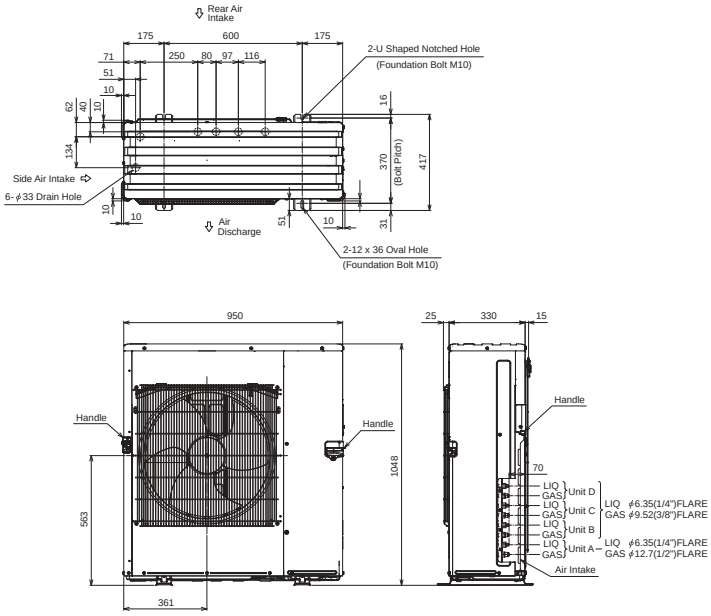

MXZ-6D122VA2 MXZ-6F122VF

OUTDOOR UNIT

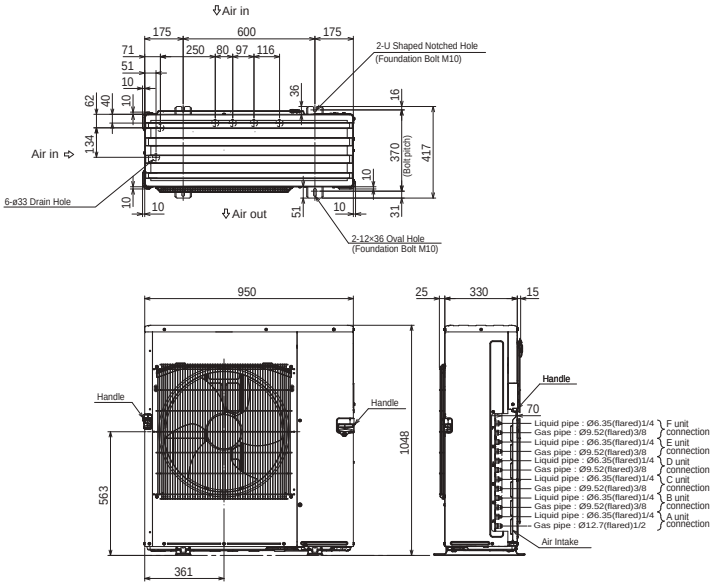

Unit : mm

PUMY-P112/125/140VKM5(-BS)

OUTDOOR UNIT

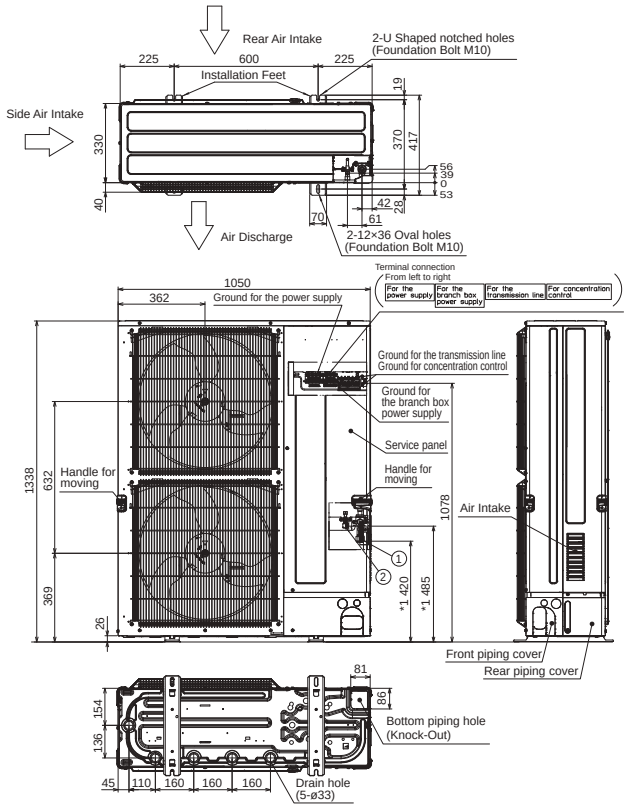

Example of Notes

① ···Refrigerant GAS pipe connection (FLARE) ø15.88 (5/8F)
② ···Refrigerant LIQUID pipe connection (FLARE) ø9.52 (3/8F)
*1 ···Indication of STOP VALVE connection location.

PUMY-P112/125/140YKM(E)4(-BS)

OUTDOOR UNIT

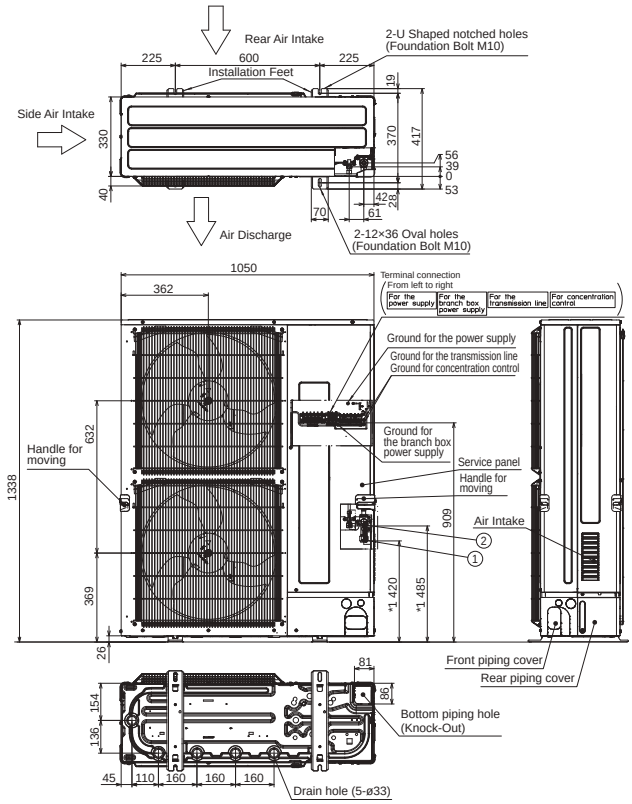

Example of Notes

① ···Refrigerant GAS pipe connection (FLARE) ø15.88 (5/8F)
② ···Refrigerant LIQUID pipe connection (FLARE) ø9.52 (3/8F)
*1 ···Indication of STOP VALVE connection location.

PUMY-P200YKM2(-BS)

OUTDOOR UNIT

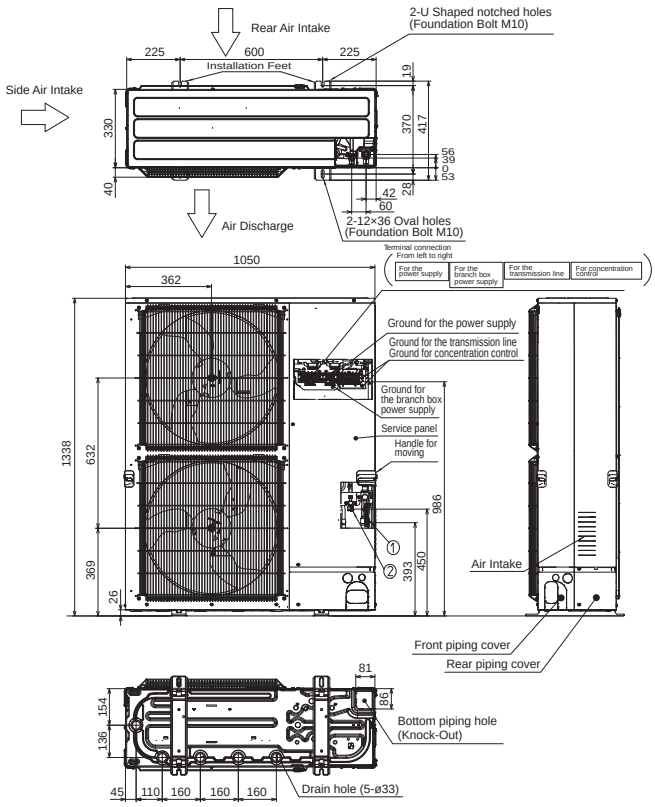

Example of Notes

① ···Refrigerant GAS pipe connection (FLARE) ø19.05 (3/4F)
② ···Refrigerant LIQUID pipe connection (FLARE) ø9.52 (3/8F)
*1 ···Indication of STOP VALVE connection location.

PUMY-SP112/125/140VKM(-BS)
PUMY-SP112/125/140YKM(-BS)

OUTDOOR UNIT

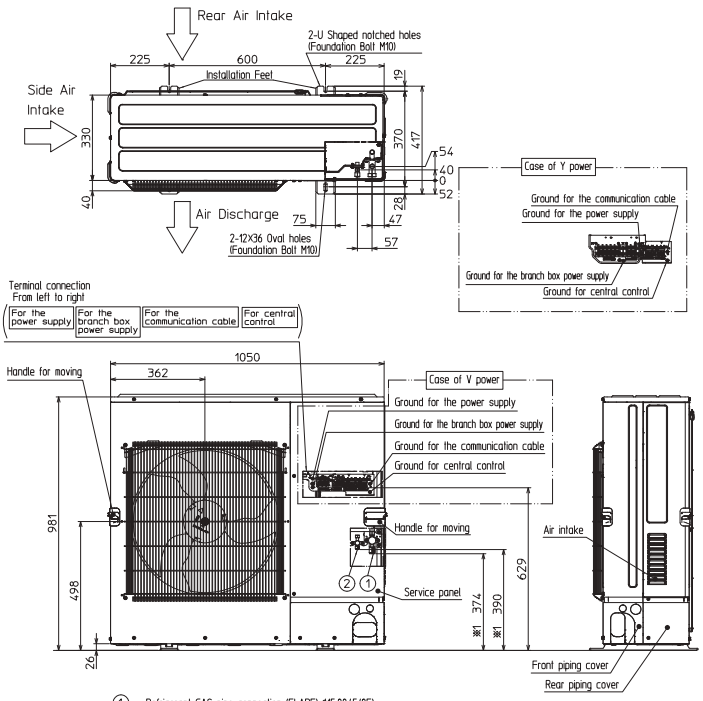

①···Refrigerant GAS pipe connection (FLARE) ø15.88 (5/8F)
②···Refrigerant LIQUID pipe connection (FLARE) ø9.52 (3/8F)
※1···Indication of STOP VALVE connection location.

Unit : mm

PAC-MK54BC

Suspension bolt: W3/W8 (M10)

Branch box

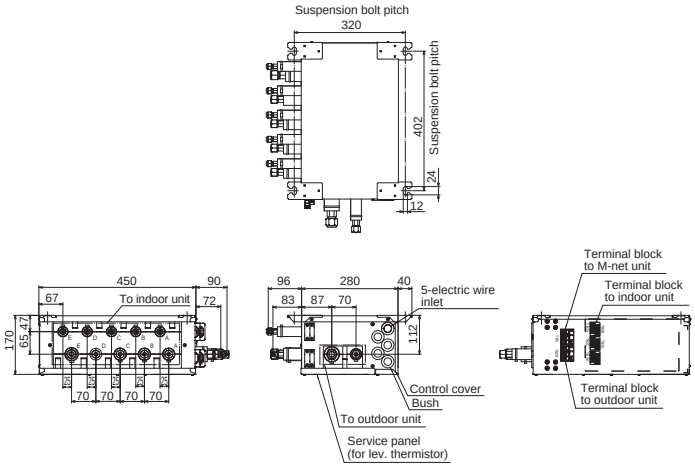

Suspension bolt : W3/8(M10)

Refrigerant pipe flared connection

	A	B	C	D	E	To outdoor unit
Liquid pipe	1/4F	1/4F	1/4F	1/4F	1/4F	3/8F
Gas pipe	3/8F	3/8F	3/8F	3/8F	1/2F	5/8F

PAC-MK34BC

Suspension bolt: W3/W8 (M10)

Branch box

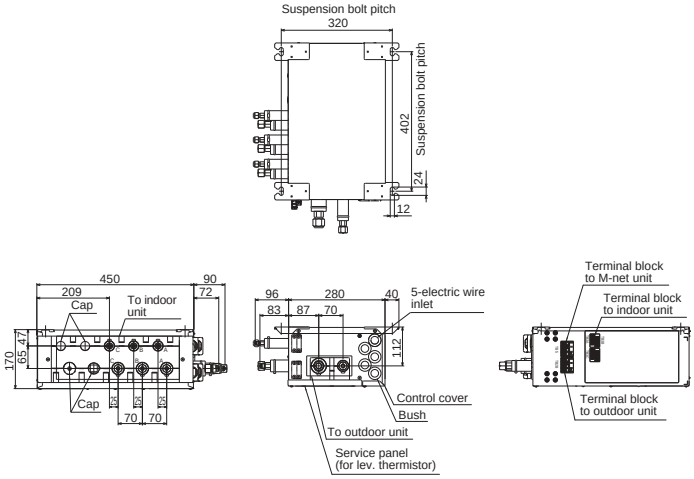

Suspension bolt : W3/8(M10)

Refrigerant pipe flared connection

	A	B	C			To outdoor unit
Liquid pipe	1/4F	1/4F	1/4F			3/8F
Gas pipe	3/8F	3/8F	3/8F			5/8F

Piping Installation

M SERIES

Single type

Series	Class <Outdoor unit>	Maximum Piping Length (m)	Maximum Height Difference (m)	Maximum Number of Bends
		Total length (A)	Outdoor unit - Indoor unit (H)	Total number
MSZ-L	25 / 35	20	12	10
	50	20	12	10
	60	30	15	10
MSZ-FT	25	20	12	10
	35 / 50	30	15	10
MSZ-A	15 / 25 / 35 / 42 / 50	20	12	10
	60 / 71	30	15	10
MSZ-EF	25 / 35 / 42	20	12	10
	50	30	15	10
MSZ-BT	20 / 25 / 35 / 50	20	12	10
MSZ-HR	25 / 35 / 42 / 50	20	12	10
	60 / 71	30	15	10
MSY-TP	35 / 50	20	12	10
MSZ-F MFZ	25 / 35	20	12	10
	50	30	15	10
MSZ-S	25 / 35 / 42	20	12	10
	50 / 60	30	15	10
MSZ-G	60 / 71	30	15	
MSZ-W MSZ-D	25 / 35	20	12	10
MSZ-HJ	25 / 35 / 50	20	12	10
	60 / 71	30	15	10

S SERIES & P SERIES

Single type

Series	Class <Outdoor unit>	Maximum Piping Length (m)	Maximum Height Difference (m)	Maximum Number of Bends
		Total length (A)	Outdoor unit - Indoor unit (H)	Total number
ZUBADAN (PUHZ-SHW)	80 / 112 / 140	75	30	15
Power Inverter (PUZ-ZM)	35 / 50	50	30	15
	60 / 71	55	30	15
	100 / 125 / 140	100	30	15
Power Inverter (PUHZ-ZRP)	35 / 50 / 60 / 71	50	30	15
	100 / 125 / 140	75	30	15
	200 / 250	100	30	15
Standard Inverter (PUZ-M & SUZ-M)	25 / 35	20	12	10
	50 / 60 / 71	30	30	10
	100	55	30	15
	125 / 140	65		
Standard Inverter (PUHZ-P & SUZ-KA)	25 / 35	20	12	10
	50 / 60 / 71	30	30	10
	100 / 125 / 140	50	30	15
	200 / 250	70	30	15

Twin type

Series	Class <Outdoor unit>	Maximum Piping Length (m)			Maximum Height Difference (m)		Maximum Number of Bends
		Total length A+B+C	Pipe length difference from distribution pipe |B-C|	Indoor unit - Distribution pipe B	Outdoor unit - Indoor unit H	Indoor unit - Indoor unit h	Total number
ZUBADAN (PUHZ-SHW)	80 / 112 / 140	75	8	20	30	1	15
Power Inverter (PUZ-ZM)	71	55	8	20	30	1	15
	100 / 125 / 140	100	8	20	30	1	15
	200 / 250						
Power Inverter (PUHZ-ZRP)	71	50	8	20	30	1	15
	100 / 125 / 140	75	8	20	30	1	15
	200 / 250	100	8	30	30	1	15
Standard Inverter (PUZ-M)	100	55	8	20	30	1	15
	125 / 140	65					
	200 / 250						
Standard Inverter (PUHZ-P)	100 / 125 / 140	50	8	20	30	1	15
	200 / 250	70	8	30	30	1	15

Triple type

Series	Class <Outdoor unit>	Maximum Piping Length (m)			Maximum Height Difference (m)		Maximum Number of Bends
		Total length A+B+C+D	Pipe length difference from distribution pipe |B-C|	Indoor unit - Distribution pipe B	Outdoor unit - Indoor unit H	Indoor unit - Indoor unit h	Total number
Power Inverter (PUZ-ZM)	140	100	8	20	30	1	15
	200 / 250						
Power Inverter (PUHZ-ZRP)	140	75	8	20	30	1	15
	200 / 250	100	8	30	30	1	15
Standard Inverter (PUZ-M)	140	65	8	20	30	1	15
	200 / 250						
Standard Inverter (PUHZ-P)	140	50	8	20	30	1	15
	200 / 250	70	8	28	30	1	15

Quadruple type

Series	Class <Outdoor unit>	Maximum Piping Length (m)			Maximum Height Difference (m)		Maximum Number of Bends
		Total length A+B+C+D+E	Pipe length difference from distribution pipe |B-C|	Indoor unit - Distribution pipe B	Outdoor unit - Indoor unit H	Indoor unit - Indoor unit h	Total number
Power Inverter (PUZ-ZM, PUHZ-ZRP)	200 / 250	100	8	30	30	1	15
Standard Inverter (PUZ-M, PUHZ-P)	200 / 250	70	8	22	30	1	15

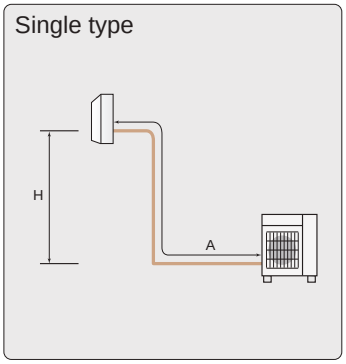

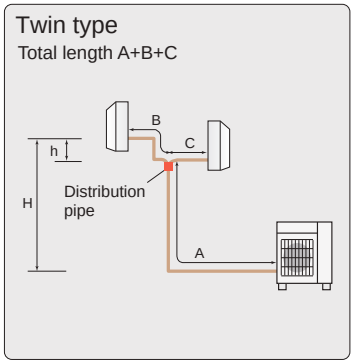

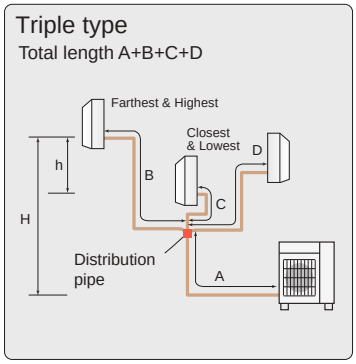

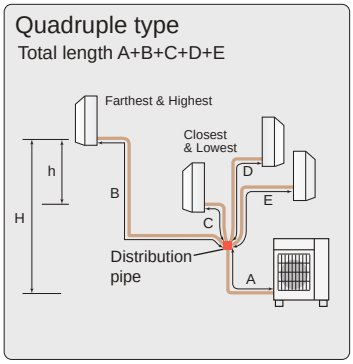

MXZ SERIES

MXZ-2D33VA, MXZ-2F33VF3

Maximum Piping Length	
Outdoor unit - Indoor unit (a,b)	15m
Total length (a+b)	20m

Maximum Number of Bends	
Outdoor unit - Indoor unit (a,b)	15
Total number (a+b)	20

* When connecting MFZ-KJ Series indoor unit, additional refrigerant is required. For details, please contact Mitsubishi Electric.

Regarding MXZ-2D33, the second unit should be a different type in the case of selecting one MFZ-KJ.

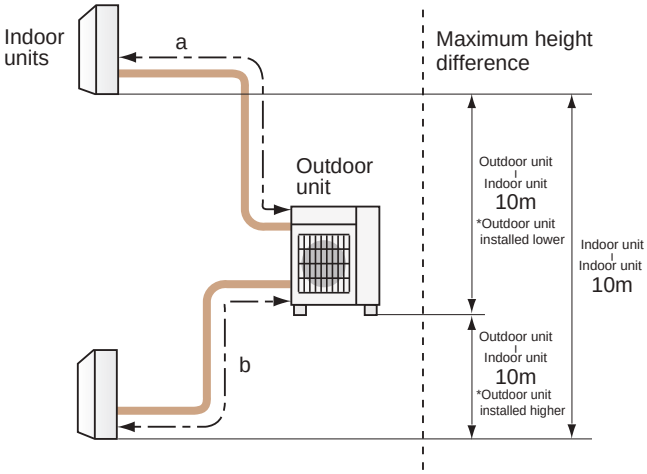

MXZ-2D42VA2, MXZ-2F42VF3

Maximum Piping Length	
Outdoor unit - Indoor unit (a,b)	20m
Total length (a+b)	30m

Maximum Number of Bends	
Outdoor unit - Indoor unit (a,b)	20
Total number (a+b)	30

MXZ-2D53VA(H)2, MXZ-2E53VAHZ, MXZ-2F53VF(H)3

Maximum Piping Length	
Outdoor unit - Indoor unit (a,b)	20m
Total length (a+b)	30m

Maximum Number of Bends	
Outdoor unit - Indoor unit (a,b)	20
Total number (a+b)	30

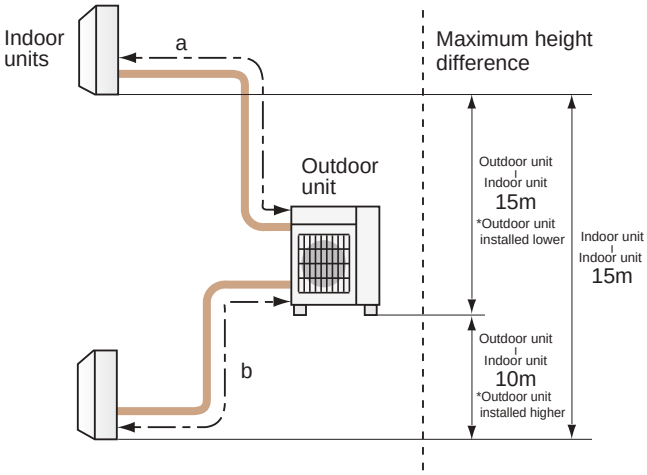

* When connecting MFZ-KJ Series indoor unit to MXZ-2D42VA2 or MXZ-2D53VA(H)2, additional refrigerant is required. For details, please contact Mitsubishi Electric.

MXZ SERIES

MXZ-2DM40VA, MXZ-2HA40VF, MXZ-2HA50VF

Maximum Piping Length	
Outdoor unit - Indoor unit (a,b)	20m
Total length (a+b)	30m

Maximum Number of Bends	
Outdoor unit - Indoor unit (a,b)	20
Total number (a+b)	30

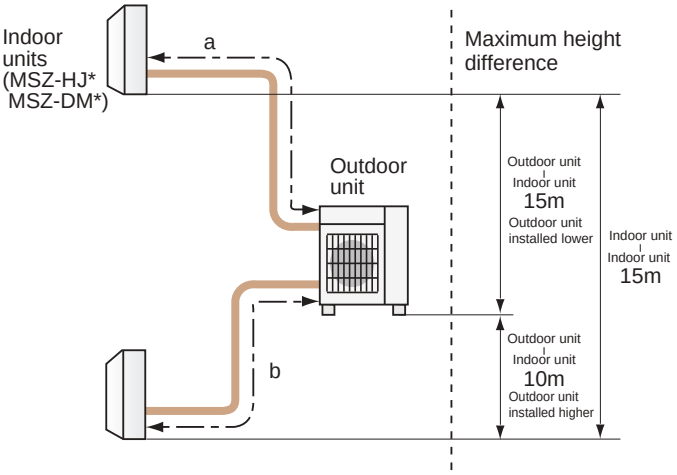

* Only MSZ-HJ and DM model is connectable.

MXZ-3DM50VA, MXZ-3HA50VF

Maximum Piping Length	
Outdoor unit - Indoor unit (a,b,c)	25m
Total length (a+b+c)	50m

Maximum Number of Bends	
Outdoor unit - Indoor unit (a,b,c)	25
Total number (a+b+c)	50

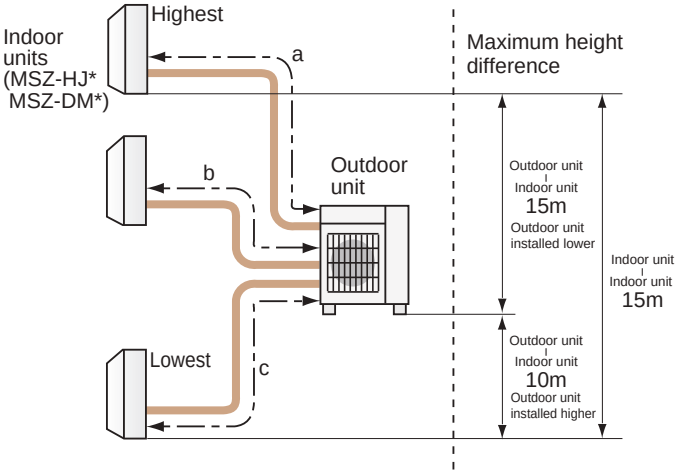

* Only MSZ-HJ and DM model is connectable.

MXZ-4E72VA, MXZ-4F72VF3

Maximum Piping Length	
Outdoor unit - Indoor unit (a,b,c,d)	25m
Total length (a+b+c+d)	60m

Maximum Number of Bends	
Outdoor unit - Indoor unit (a,b,c,d)	25
Total number (a+b+c+d)	60

* When connecting MFZ-KJ Series indoor unit, additional refrigerant is required. For details, please contact Mitsubishi Electric.

MXZ-4E83VA, MXZ-4E83VAHZ

Maximum Piping Length	
Outdoor unit - Indoor unit (a,b,c,d)	25m
Total length (a+b+c+d)	70m

Maximum Number of Bends	
Outdoor unit - Indoor unit (a,b,c,d)	25
Total number (a+b+c+d)	70

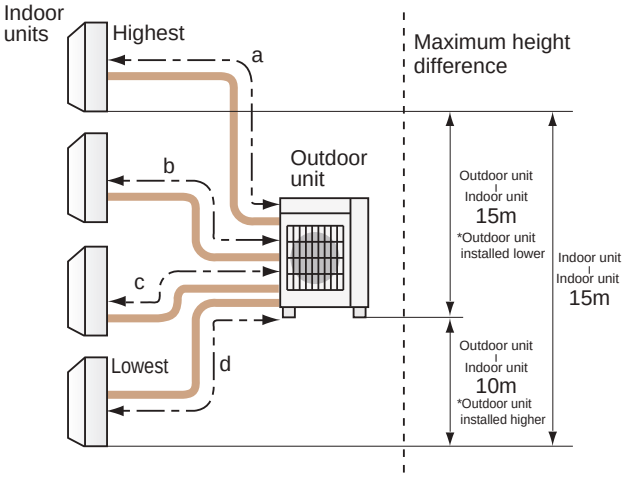

MXZ-5E102VA, MXZ-5F102VA

Maximum Piping Length	
Outdoor unit - Indoor unit (a,b,c,d,e)	25m
Total length (a+b+c+d+e)	80m

Maximum Number of Bends	
Outdoor unit - Indoor unit (a,b,c,d,e)	25
Total number (a+b+c+d+e)	80

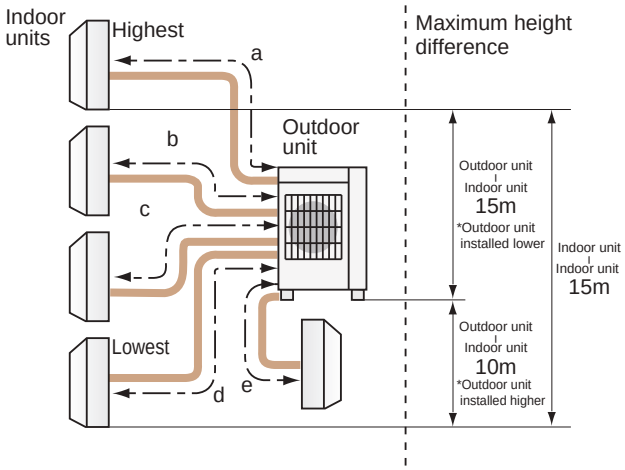

MXZ-6D122VA2, MXZ-6F122VF

Maximum Piping Length	
Outdoor unit - Indoor unit (a,b,c,d,e,f)	25m
Total length (a+b+c+d+e+f)	80m

Maximum Number of Bends	
Outdoor unit - Indoor unit (a,b,c,d,e,f)	25
Total number (a+b+c+d+e+f)	80

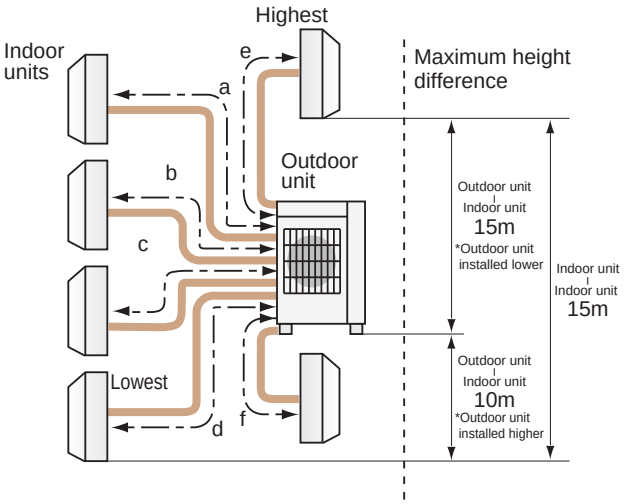

PUMY-SP112/125/140V(Y)KM

1-Branch box

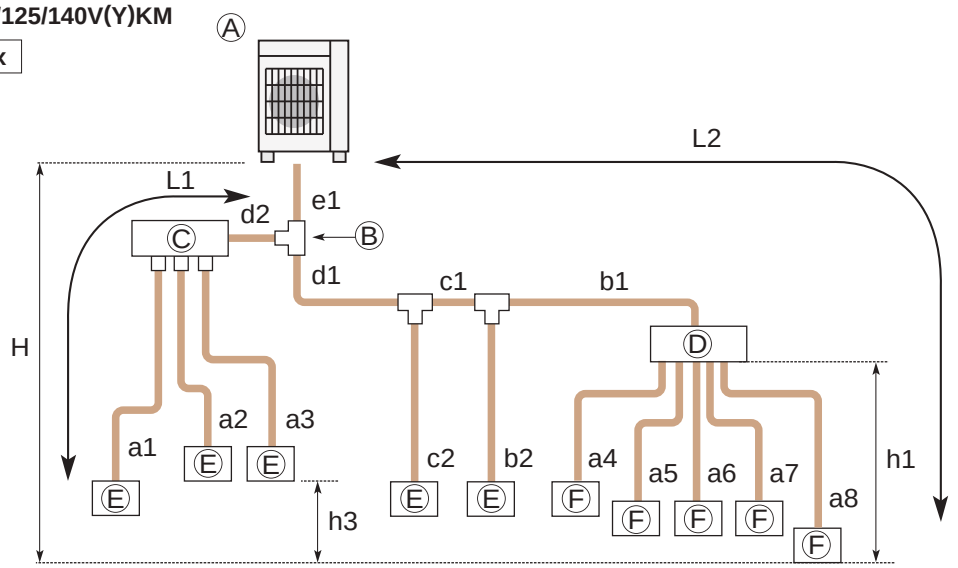

Ⓐ Outdoor Unit
Ⓑ First joint (CMY, MSDD)
Ⓒ Branch header (CMY)
Ⓓ Branch box (PAC-MK•BC(B))
Ⓔ CITY MULTI Indoor unit
Ⓕ M/S/P series Indoor unit

Permissible length (One-way)	Total piping length	e1 + d1 + d2 + c1 + c2 + b1 + b2 + a1 + a2 + a3 + a4 + a5 + a6 + a7 + a8 ≦ 120 m
	Farthest piping length (L1)	e1 + d2 + a1 or e1 + d1 + c1 + b2 ≦ 70 m
	Farthest piping length. Via Branch box (L2)	e1 + d1 + c1 + b1 + a8 ≦ 50 m
	Piping length between outdoor unit and branch box	e1 + d1 + c1 + b1 ≦ 55 m
	Farthest piping length from the first joint	d1 + c1 + b1 or d1 + c1 + b2 ≦ 50 m
	Farthest piping length after branch box	a8 ≦ 25 m
	Total piping length between branch boxes and indoor units	a4 + a5 + a6 + a7 + a8 ≦ 95 m
Permissible height difference (One-way)	In indoor/outdoor section (H)*1	H ≦ 50 m (In case of outdoor unit is set higher than indoor unit)
		H ≦ 30 m (In case of outdoor unit is set lower than indoor unit)
	In branch box/indoor unit section (h1)	h1 ≦ 15 m
	In each indoor unit (h3)	h3 ≦ 12 m
Number of bends		|e1 + d2 + a1|, |e1 + d2 + a2|, |e1 + d2 + a3|, |e1 + d1 + c2|, |e1 + d1 + c1 + b2|, |e1 + d1 + c1 + b1 + a4|, |e1 + d1 + c1 + b1 + a5|, |e1 + d1 + c1 + b1 + a6|, |e1 + d1 + c1 + b1 + a7|, |e1 + d1 + c1 + b1 + a8| ≦ 15

*1: Branch box should be placed within the level between the outdoor unit and indoor units.

2-Branch boxes

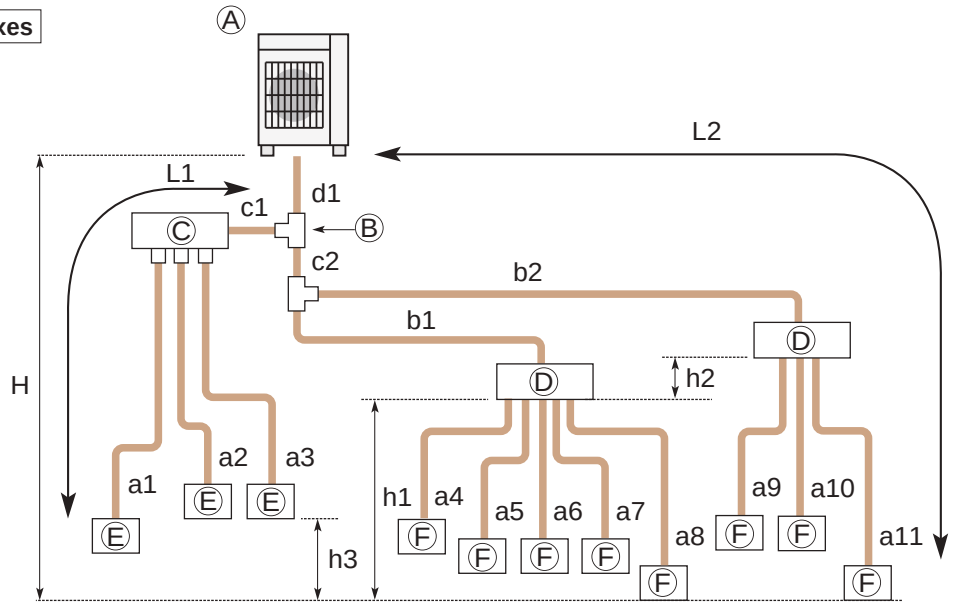

Ⓐ Outdoor Unit
Ⓑ First joint (CMY, MSDD)
Ⓒ Branch header (CMY)
Ⓓ Branch box (PAC-MK•BC(B))
Ⓔ CITY MULTI Indoor unit
Ⓕ M/S/P series Indoor unit

Permissible length (One-way)	Total piping length	d1 + c1 + c2 + b1 + b2 + a1 + a2 + a3 + a4 + a5 + a6 + a7 + a8 + a9 + a10 + a11 ≦ 120 m
	Farthest piping length (L1)	d1 + c1 + a1 ≦ 70 m
	Farthest piping length. Via Branch box (L2)	d1 + c2 + b2 + a11 ≦ 80 m
	Piping length between outdoor unit and branch boxes	d1 + c2 + b1 + b2 ≦ 55 m
	Farthest piping length from the first joint	c2 + b2 or c1 + a1 ≦ 50 m
	Farthest piping length after branch box	a11 ≦ 25 m
	Farthest branch box from outdoor unit	d1 + c2 + b2 ≦ 55 m
	Total piping length between branch boxes and indoor units	a4 + a5 + a6 + a7 + a8 + a9 + a10 + a11 ≦ 95 m
Permissible height difference (One-way)	In indoor/outdoor section (H)*1	H ≦ 50 m (In case of outdoor unit is set higher than indoor unit)
		H ≦ 30 m (In case of outdoor unit is set lower than indoor unit)
	In branch box/indoor unit section (h1)	h1 + h2 ≦ 15 m
	In each branch unit (h2)	h2 ≦ 15 m
	In each indoor unit (h3)	h3 ≦ 12 m
Number of bends		|d1 + c1 + a1|, |d1 + c1 + a2|, |d1 + c1 + a3|, |d1 + c2 + b1 + a4|, |d1 + c2 + b1 + a5|, |d1 + c2 + b1 + a6|, |d1 + c2 + b1 + a7|, |d1 + c2 + b1 + a8|, |d1 + c2 + b2 + a9|, |d1 + c2 + b2 + a10|, |d1 + c2 + b2 + a11| ≦ 15

*1: Branch box should be placed within the level between the outdoor unit and indoor units.

PUMY-P112/125/140VKM5
PUMY-P112/125/140YKM(E)4

1-Branch box

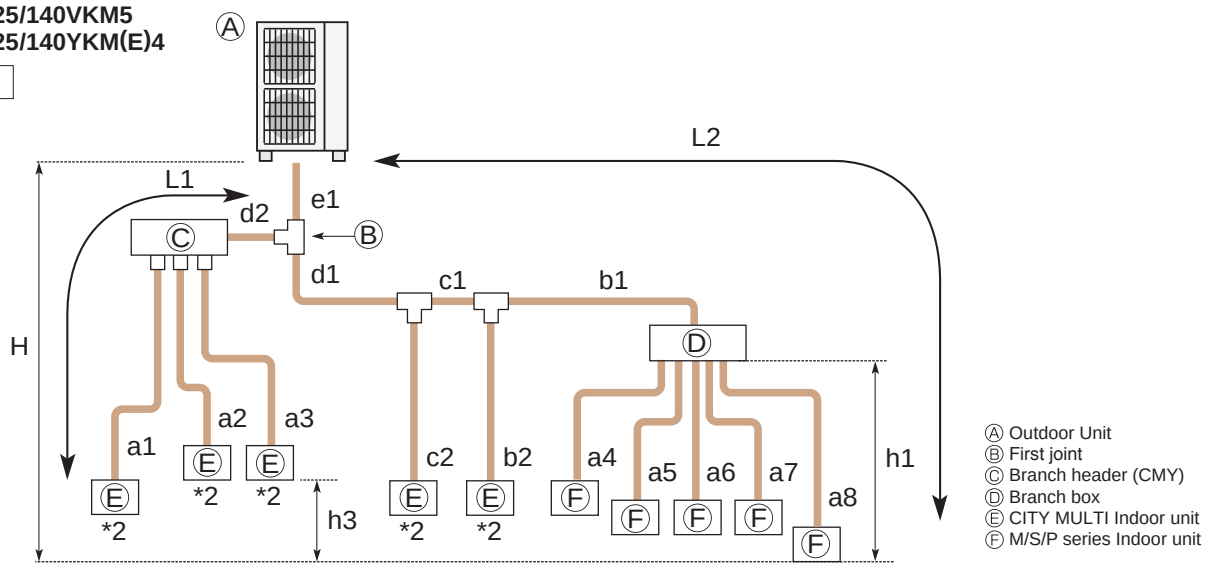

Permissible length (One-way)	Total piping length	e1 + d1 + d2 + c1 + c2 + b1 + b2 + a1 + a2 + a3 + a4 + a5 + a6 + a7 + a8 ≦ 300 m
	Farthest piping length (L1)	e1 + d2 + a1 or e1 + d1 + c1 + b2 ≦ 85 m
	Farthest piping length. Via Branch box (L2)	e1 + d1 + c1 + b1 + a8 ≦ 80 m
	Piping length between outdoor unit and branch box	e1 + d1 + c1 + b1 ≦ 55 m
	Farthest piping length from the first joint	d1 + c1 + b1 or d1 + c1 + b2 ≦ 30 m
	Farthest piping length after branch box	a8 ≦ 25 m
	Total piping length between branch boxes and indoor units	a4 + a5 + a6 + a7 + a8 ≦ 95 m
Permissible height difference (One-way)	In indoor/outdoor section (H)*1	H ≦ 50 m (In case of outdoor unit is set higher than indoor unit)
		H ≦ 40 m (In case of outdoor unit is set lower than indoor unit)
	In branch box/indoor unit section (h1)	h1 ≦ 15 m
	In each indoor unit (h3)	h3 ≦ 12 m
Number of bends		|e1 + d2 + a1|, |e1 + d2 + a2|, |e1 + d2 + a3|, |e1 + d1 + c2|, |e1 + d1 + c1 + b2|, |e1 + d1 + c1 + b1 + a4|, |e1 + d1 + c1 + b1 + a5|, |e1 + d1 + c1 + b1 + a6|, |e1 + d1 + c1 + b1 + a7|, |e1 + d1 + c1 + b1 + a8| ≦ 15

*1: Branch box should be placed within the level between the outdoor unit and indoor units.
*2: PKFY and PFFY Series cannot be connected.

2-Branch boxes

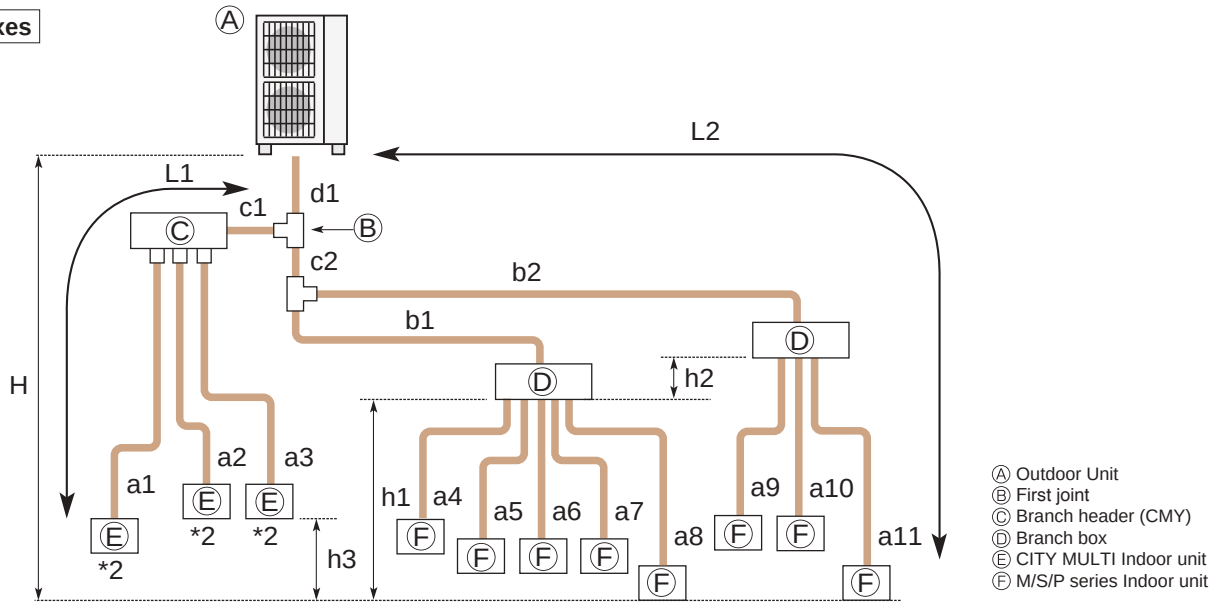

Permissible length (One-way)	Total piping length	d1 + c1 + c2 + b1 + b2 + a1 + a2 + a3 + a4 + a5 + a6 + a7 + a8 + a9 + a10 + a11 ≦ 240 m
	Farthest piping length (L1)	d1 + c1 + a1 ≦ 85 m
	Farthest piping length. Via Branch box (L2)	d1 + c2 + b2 + a11 ≦ 80 m
	Piping length between outdoor unit and branch boxes	d1 + c2 + b1 + b2 ≦ 55 m
	Farthest piping length from the first joint	c2 + b2 or c1 + a1 ≦ 30 m
	Farthest piping length after branch box	a11 ≦ 25 m
	Farthest branch box from outdoor unit	d1 + c2 + b2 ≦ 55 m
	Total piping length between branch boxes and indoor units	a4 + a5 + a6 + a7 + a8 + a9 + a10 + a11 ≦ 95 m
Permissible height difference (One-way)	In indoor/outdoor section (H)*1	H ≦ 50 m (In case of outdoor unit is set higher than indoor unit)
		H ≦ 40 m (In case of outdoor unit is set lower than indoor unit)
	In branch box/indoor unit section (h1)	h1 + h2 ≦ 15 m
	In each branch unit (h2)	h2 ≦ 15 m
	In each indoor unit (h3)	h3 ≦ 12 m
Number of bends		|d1 + c1 + a1|, |d1 + c1 + a2|, |d1 + c1 + a3|, |d1 + c2 + b1 + a4|, |d1 + c2 + b1 + a5|, |d1 + c2 + b1 + a6|, |d1 + c2 + b1 + a7|, |d1 + c2 + b1 + a8|, |d1 + c2 + b2 + a9|, |d1 + c2 + b2 + a10|, |d1 + c2 + b2 + a11| ≦ 15

*1: Branch box should be placed within the level between the outdoor unit and indoor units.
*2: PKFY and PFFY Series cannot be connected.

PUMY-P200YKM2(-BS)

1-Branch box

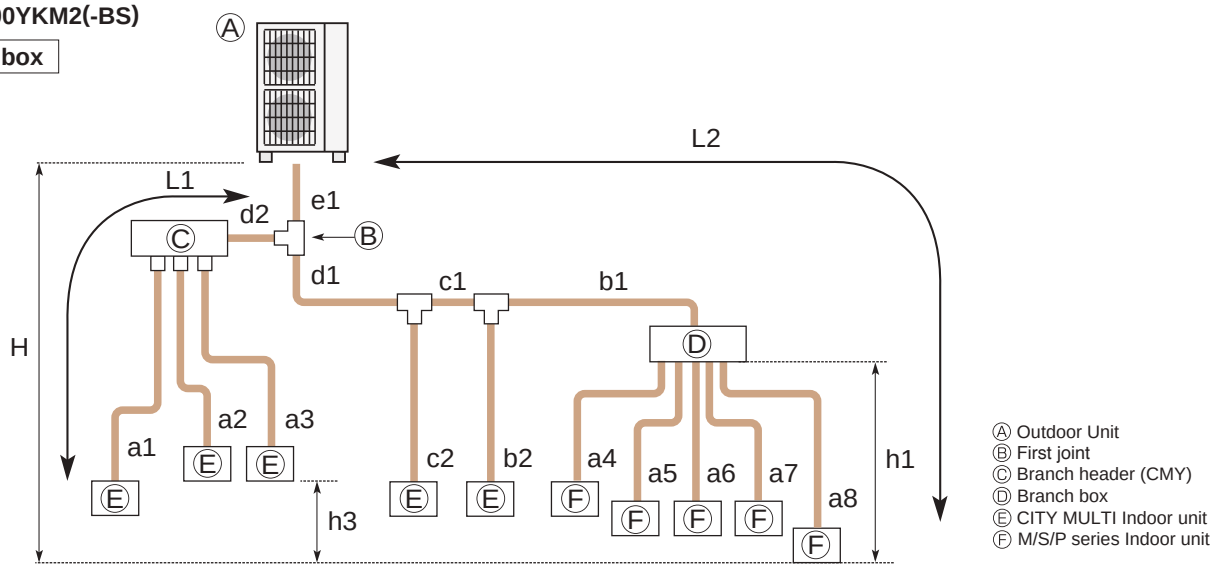

Permissible length (One-way)	Total piping length	e1 + d1 + d2 + c1 + c2 + b1 + b2 + a1 + a2 + a3 + a4 + a5 + a6 + a7 + a8 ≦ 150 m
	Farthest piping length (L1)	e1 + d2 + a1 or e1 + d1 + c1 + b2 ≦ 80 m
	Farthest piping length. Via Branch box (L2)	e1 + d1 + c1 + b1 + a8 ≦ 80 m
	Piping length between outdoor unit and branch box	e1 + d1 + c1 + b1 ≦ 55 m
	Farthest piping length from the first joint	d1 + c1 + b1 or d1 + c1 + b2 ≦ 30 m
	Farthest piping length after branch box	a8 ≦ 25 m
	Total piping length between branch boxes and indoor units	a4 + a5 + a6 + a7 + a8 ≦ 95 m
Permissible height difference (One-way)	In indoor/outdoor section (H)*1	H ≦ 50 m (In case of outdoor unit is set higher than indoor unit)
		H ≦ 40 m (In case of outdoor unit is set lower than indoor unit)
	In branch box/indoor unit section (h1)	h1 ≦ 15 m
	In each indoor unit (h3)	h3 ≦ 12 m
Number of bends		|e1 + d2 + a1|, |e1 + d2 + a2|, |e1 + d2 + a3|, |e1 + d1 + c2|, |e1 + d1 + c1 + b2|, |e1 + d1 + c1 + b1 + a4|, |e1 + d1 + c1 + b1 + a5|, |e1 + d1 + c1 + b1 + a6|, |e1 + d1 + c1 + b1 + a7|, |e1 + d1 + c1 + b1 + a8| ≦ 15

*1: Branch box should be placed within the level between the outdoor unit and indoor units.

2-Branch boxes

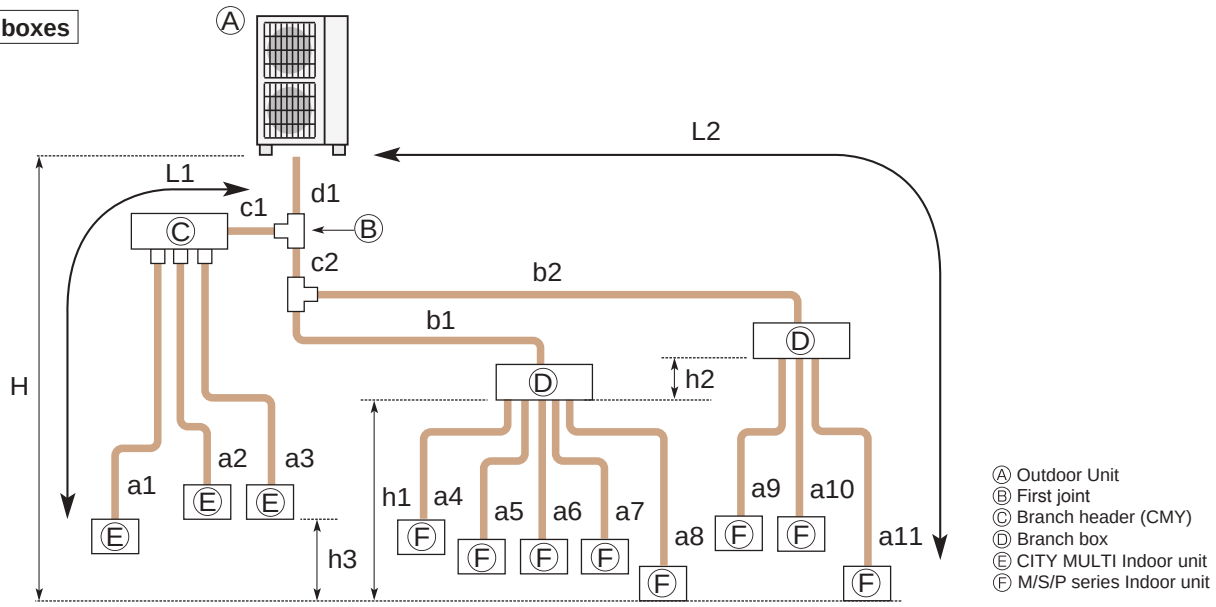

Permissible length (One-way)	Total piping length	d1 + c1 + c2 + b1 + b2 + a1 + a2 + a3 + a4 + a5 + a6 + a7 + a8 + a9 + a10 + a11 ≦ 150 m
	Farthest piping length (L1)	d1 + c1 + a1 ≦ 80 m
	Farthest piping length. Via Branch box (L2)	d1 + c2 + b2 + a11 ≦ 80 m
	Piping length between outdoor unit and branch boxes	d1 + c2 + b1 + b2 ≦ 55 m
	Farthest piping length from the first joint	c2 + b2 or c1 + a1 ≦ 30 m
	Farthest piping length after branch box	a11 ≦ 25 m
	Farthest branch box from outdoor unit	d1 + c2 + b2 ≦ 55 m
	Total piping length between branch boxes and indoor units	a4 + a5 + a6 + a7 + a8 + a9 + a10 + a11 ≦ 95 m
Permissible height difference (One-way)	In indoor/outdoor section (H)*1	H ≦ 50 m (In case of outdoor unit is set higher than indoor unit)
		H ≦ 40 m (In case of outdoor unit is set lower than indoor unit)
	In branch box/indoor unit section (h1)	h1 + h2 ≦ 15 m
	In each branch unit (h2)	h2 ≦ 15 m
	In each indoor unit (h3)	h3 ≦ 12 m
Number of bends		|d1 + c1 + a1|, |d1 + c1 + a2|, |d1 + c1 + a3|, |d1 + c2 + b1 + a4|, |d1 + c2 + b1 + a5|, |d1 + c2 + b1 + a6|, |d1 + c2 + b1 + a7|, |d1 + c2 + b1 + a8|, |d1 + c2 + b2 + a9|, |d1 + c2 + b2 + a10|, |d1 + c2 + b2 + a11| ≦ 15

*1: Branch box should be placed within the level between the outdoor unit and indoor units.

Explanation of Terminology

Maximum piping length:
This is the maximum allowable length of the refrigerant piping. The amount of refrigerant pipe used cannot be longer than the length specified.

Total length:
The maximum allowable combined length of all the refrigerant piping between the outdoor unit and indoor unit(s).

Outdoor Unit - Indoor Unit:
The maximum allowable length of the refrigerant piping between the outdoor unit and indoor units installed when multiple units are connected to a single outdoor unit. This distance limitation refers to the maximum length between the outdoor unit and the farthest indoor unit.

Pipe length difference from distribution pipe:
The maximum allowable difference in refrigerant piping length from the distribution pipe to the farthest indoor unit and from the distribution pipe to the closest indoor unit when multiple indoor units are connected to a single outdoor unit using a distribution pipe.

Indoor Unit - Distribution Pipe:
The maximum allowable length of the refrigerant piping between indoor units and the distribution pipe when multiple indoor units are connected to a single outdoor unit.

Maximum height difference:
This is the maximum allowable height difference. It is necessary to install the air conditioning system so that the height distance is no more than the difference specified. (Specified differences may vary if the outdoor unit is installed higher or lower than the indoor units).

Outdoor unit - Indoor unit:
The maximum allowable difference in height between the outdoor unit and indoor units when installed (when multiple indoor units are connected to a single outdoor unit, this distance limitation refers to the maximum height difference between the outdoor unit and an indoor unit).

Indoor unit - Indoor unit:
The maximum allowable difference between the heights of indoor units when multiple indoor units are connected to a single outdoor unit.

Maximum number of bends:
This is the maximum allowable number of bends in the refrigerant piping. The total number of bends in the refrigerant piping used cannot exceed the number specified.

Total number:
The maximum allowable number of bends for all refrigerant piping between the outdoor unit and indoor units.

Outdoor unit - Indoor unit:
The maximum allowable number of bends between the outdoor unit and each indoor unit when multiple indoor units are connected to a single outdoor unit.

Conditions for specifications

Temperature conditions are based on JIS B8616.

Cooling	Indoor	27˚C DB, 19˚C WB
	Outdoor	35˚C DB, 24˚C WB
Heating	Indoor	20˚C DB
	Outdoor	7˚C DB, 6˚C WB

Refrigerant piping length ; 5m
The figures for total input are based on the following voltages.

Series	Indoor unit	Outdoor unit
M Series S Series P Series (except for PEA) MXZ Series POWERFUL HEATING Series	–	VG,VE,VA,VHA,VKA:230V/Single phase/50Hz YA,YHA,YKA:400V/Three phase/50Hz
PEA Series	400V/Three phase/50Hz	400V/Three phase/50Hz

Sound pressure level
- The sound pressure measurement is conducted in an anechoic chamber.
- The actual sound level depends on the distance from the unit and the acoustic environment.

How to read a model name

1) M & S Series

M	M : M Series S : S Series
S	"S"= Wall-mounted , "F"= Compact floor-standing , "E"= Compact ceiling-concealed , "L"= 4- or 1-way cassette , "U"= Outdoor unit
Z	"Z"= Inverter heat pump , "H"= Fixed-speed heat pump , "blank"= Cooling only of Non-inverter , "Y"= Cooling only of inverter
–	
F	Series
H	Generation
25	Rated cooling capacity (kW base)
V	230V / Single phase / 50Hz
E	"A"= R410A with new A control , "B"= R410A with conventional control , "E"= R410A with new A control & ErP correspondance , "G"=R32 with new A control & ErP correspondance , "F"= R32 with new A control
HZ	"HZ"= Hyper Heating model , "H"= Anti-freeze heater equipped model , "S"= Silver indoor unit , "W"= White/Natural White indoor unit , "B"= Black/Onyx Black indoor unit , "V"= Pearl White indoor unit , "R"= Ruby Red indoor unit

2) P Series

P	P Series
U	"K"= Wall-mounted , "S"= Floor-standing , "L"= 4-way cassette , "E"= Ceiling-concealed , "C"= Ceiling-suspended , "U"= Outdoor unit
H	"H"= For heating and cooling
Z	"Z"= Inverter
–	
ZM/M/ZRP/RP/P	"ZM"= R32 Eco-conscious Power Inverter , "M"= R32 &R410A "ZRP"/"RP"= R410A & cleaning-free pipe reuse , "P"=R410A
SHW	"SH"= Powerful heating ZUBADAN , "W"= can be used as air to water application
71	Rated cooling capacity (kW base)
V	"V"= 230V / Single phase / 50Hz , "Y"= 400V / Three phase / 50Hz
H	Generation
A	"A"= A control

3) MXZ Series

M	M Series
X	Multi-system outdoor unit (heat pump)
Z	Inverter heat pump
–	
4	Maximum number of connectable indoor units
D/E/F/HJ/DM	Generation / Type
72	Rated cooling capacity (kW base)
V	"V"= 230V / Single phase / 50Hz
A	"A"= R410A with new A control
HZ	"HZ"= Hyper Heating model , "H"= Anti-freeze heater equipped model

Refrigerant Amount

M/S/P/Multi

	Model Name	Refrigerant		Pre-charged quantity		Max. added quantity	
			GWP	Weight [kg]	CO_2 equivalent [t]	Weight [kg]	CO_2 equivalent [t]
M-Series	MUZ-LN25VG	R32	675	1.00	0.68	0.26	0.18
	MUZ-LN25VG2	R32	675	0.8	0.54	0.20	0.135
	MUZ-LN35VG	R32	675	1.00	0.68	0.26	0.18
	MUZ-LN35VG2	R32	675	0.85	0.57	0.20	0.14
	MUZ-LN50VG	R32	675	1.25	0.85	0.26	0.18
	MUZ-LN50VG2	R32	675	1.25	0.85	0.10	0.07
	MUZ-LN60VG	R32	675	1.45	0.98	0.46	0.32
	MUZ-LN25VGHZ	R32	675	1.00	0.68	0.26	0.18
	MUZ-LN35VGHZ	R32	675	1.00	0.68	0.26	0.18
	MUZ-LN50VGHZ	R32	675	1.45	0.98	0.46	0.32
	MUZ-FT25VGHZ	R32	675	0.85	0.58	0.25	0.17
	MUZ-FT35VGHZ	R32	675	0.95	0.65	0.45	0.31
	MUZ-FT50VGHZ	R32	675	0.95	0.65	0.45	0.31
	MUZ-AP15VG	R32	675	0.49	0.34	0.26	0.18
	MUZ-AP20VG	R32	675	0.55	0.37	0.26	0.18
	MUZ-AP25VG	R32	675	0.55	0.37	0.26	0.18
	MUZ-AP35VG	R32	675	0.55	0.37	0.26	0.18
	MUZ-AP42VG	R32	675	0.70	0.47	0.26	0.18
	MUZ-AP50VG	R32	675	1.00	0.68	0.26	0.18
	MUZ-AP60VG	R32	675	1.05	0.71	0.30	0.20
	MUZ-AP71VG	R32	675	1.50	1.02	0.30	0.20
	MUZ-AP25VGH	R32	675	0.55	0.37	0.26	0.18
	MUZ-AP35VGH	R32	675	0.55	0.37	0.26	0.18
	MUZ-AP42VGH	R32	675	0.70	0.47	0.26	0.18
	MUZ-AP50VGH	R32	675	1.00	0.68	0.26	0.18
	MUZ-EF25VG(H)	R32	675	0.62	0.42	0.26	0.18
	MUZ-EF35VG(H)	R32	675	0.74	0.50	0.26	0.18
	MUZ-EF42VG	R32	675	0.74	0.50	0.26	0.18
	MUZ-EF50VG	R32	675	1.05	0.71	0.46	0.32
	MUZ-BT20VG	R32	675	0.45	0.30	0.26	0.18
	MUZ-BT25VG	R32	675	0.50	0.34	0.26	0.18
	MUZ-BT35VG	R32	675	0.50	0.34	0.26	0.18
	MUZ-BT50VG	R32	675	0.70	0.47	0.26	0.18
	MUZ-HR25VF	R32	675	0.40	0.27	0.26	0.18
	MUZ-HR35VF	R32	675	0.45	0.30	0.26	0.18
	MUZ-HR42VF	R32	675	0.70	0.47	0.26	0.18
	MUZ-HR50VF	R32	675	0.80	0.54	0.26	0.18
	MUZ-HR60VF	R32	675	1.05	0.71	0.46	0.32
	MUZ-HR71VF	R32	675	1.05	0.71	0.46	0.32
	MUY-TP35VF	R410A	2088	0.85	0.57	0.13	0.09
	MUY-TP50VF	R410A	2088	0.85	0.57	0.13	0.09
	MUZ-FH25VE	R410A	2088	1.15	2.41	0.39	0.82
	MUZ-FH35VE	R410A	2088	1.15	2.41	0.39	0.82
	MUZ-FH50VE	R410A	2088	1.55	3.24	0.46	0.97
	MUZ-FH25VEHZ	R410A	2088	1.15	2.41	0.39	0.82
	MUZ-FH35VEHZ	R410A	2088	1.15	2.41	0.39	0.82
	MUZ-FH50VEHZ	R410A	2088	1.55	3.24	0.46	0.97
	MUZ-SF25VE(H)	R410A	2088	0.70	1.47	0.39	0.82
	MUZ-SF35VE(H)	R410A	2088	0.80	1.68	0.39	0.82
	MUZ-SF42VE(H)	R410A	2088	1.15	2.41	0.39	0.82
	MUZ-SF50VE(H)	R410A	2088	1.55	3.24	0.46	0.97
	MUZ-GF60VE	R410A	2088	1.55	3.24	0.40	0.84
	MUZ-GF71VE	R410A	2088	1.90	3.97	1.10	2.30
	MUZ-WN25VA	R410A	2088	0.70	1.47	0.26	0.55
	MUZ-WN35VA	R410A	2088	0.70	1.47	0.26	0.55
	MUZ-DM25VA	R410A	2088	0.70	1.47	0.26	0.55
	MUZ-DM35VA	R410A	2088	0.72	1.51	0.26	0.55
	MUZ-HJ25VA	R410A	2088	0.70	1.47	0.26	0.55
	MUZ-HJ35VA	R410A	2088	0.72	1.51	0.26	0.55
	MUZ-HJ50VA	R410A	2088	1.15	2.41	0.26	0.55
	MUZ-HJ60VA	R410A	2088	1.80	3.76	0.46	0.97
	MUZ-HJ71VA	R410A	2088	1.80	3.76	0.46	0.97
	MUFZ-KJ25VE	R410A	2088	1,1	2.30	0.39	0.82
	MUFZ-KJ35VE	R410A	2088	1,1	2.30	0.39	0.82
	MUFZ-KJ50VE	R410A	2088	1.50	3.14	0.46	0.97
	MUFZ-KJ25VEHZ	R410A	2088	1,1	2.30	0.39	0.82
	MUFZ-KJ35VEHZ	R410A	2088	1,1	2.30	0.39	0.82
	MUFZ-KJ50VEHZ	R410A	2088	1.50	3.14	0.46	0.97
	MXZ-2D33VA	R410A	2088	1.15	2.72	0.0	0.00
	MXZ-2D42VA2	R410A	2088	1.3	2.72	0.2	0.42
	MXZ-2D53VA(H)2	R410A	2088	1.3	2.72	0.2	0.42
	MXZ-3E54VA	R410A	2088	2.7	5.64	0.2	0.42
	MXZ-3E68VA	R410A	2088	2.7	5.64	0.4	0.84
	MXZ-4E72VA	R410A	2088	2.7	5.64	0.4	0.84
	MXZ-4E83VA	R410A	2088	2.99	6.25	0.9	1.88
	MXZ-5E102VA	R410A	2088	2.99	6.25	1.6	3.35
	MXZ-6D122VA	R410A	2088	4.0	8.36	1.0	2.09
	MXZ-2F33VF3	R32	675	0.8	0.54	0.8	0.54
	MXZ-2F42VF3	R32	675	1.0	0.675	1.0	0.675
	MXZ-2F53VF(H)3	R32	675	1.0	0.675	1.0	0.675
	MXZ-3F54VF3	R32	675	2.4	1.62	2.4	1.62
	MXZ-3F68VF3	R32	675	2.4	1.62	2.4	1.62
	MXZ-4F72VF3	R32	675	2.4	1.62	2.4	1.62
	MXZ-4F80VF3	R32	675	2.4	1.62	2.4	1.62
	MXZ-4F83VF	R32	675	2.4	1.62	2.4	1.62
	MXZ-5F102VF	R32	675	2.4	1.62	2.4	1.62
	MXZ-6F122VF	R32	675	2.4	1.62	2.4	1.62
	MXZ-2F53VFHZ	R32	675	2.4	1.62	2.4	1.62
	MXZ-4F83VFHZ	R32	675	2.4	1.62	2.4	1.62
	MXZ-2E53VAHZ	R410A	2088	2.0	4.18	0.2	0.42
	MXZ-4E83VAHZ	R410A	2088	3.9	8.15	0.9	1.88
	MXZ-2DM40VA	R410A	2088	0.95	1.99	0.2	0.42
	MXZ-3DM50VA	R410A	2088	2.7	5.64	0.2	0.42
	MXZ-2HA40VF	R32	675	0.9	0.61	0.9	0.61
	MXZ-2HA50VF	R32	675	0.9	0.61	0.9	0.61
	MXZ-3HA50VF	R32	675	1.4	0.95	1.6	1.08

	Model Name	Refrigerant		Pre-charged quantity		Max. added quantity	
			GWP	Weight [kg]	CO_2 equivalent [t]	Weight [kg]	CO_2 equivalent [t]
S-Series	SUZ-M25VA	R32	675	0.65	0.44	0.91	0.61
	SUZ-M35VA	R33	675	0.90	0.61	1.16	0.78
	SUZ-M50VA	R34	675	1.20	0.81	1.66	1.12
	SUZ-M60VA	R35	675	1.25	0.84	1.71	1.15
	SUZ-M71VA	R36	675	1.45	0.98	2.37	1.60
	SUZ-KA25VA6	R410A	2088	0.80	1.68	0.39	0.82
	SUZ-KA35VA6	R410A	2088	1.15	2.41	0.39	0.82
	SUZ-KA50VA6	R410A	2088	1.60	3.35	0.46	0.97
	SUZ-KA60VA6	R410A	2088	1.60	3.35	0.46	0.97
	SUZ-KA71VA6	R410A	2088	1.80	3.76	1.265	2.65
P-Series	PUZ-ZM35VKA	R32	675	2.0	1.35	0.3	0.20
	PUZ-ZM50VKA	R32	675	2.0	1.35	0.3	0.20
	PUZ-ZM60VHA	R32	675	2.8	1.89	0.8	0.54
	PUZ-ZM71VHA	R32	675	2.8	1.89	0.8	0.54
	PUZ-ZM100VKA	R32	675	4.0	2.70	2.8	1.89
	PUZ-ZM100YKA	R32	675	4.0	2.70	2.8	1.89
	PUZ-ZM125VKA	R32	675	4.0	2.70	2.8	1.89
	PUZ-ZM125YKA	R32	675	4.0	2.70	2.8	1.89
	PUZ-ZM140VKA	R32	675	4.0	2.70	2.8	1.89
	PUZ-ZM140YKA	R32	675	4.0	2.70	2.8	1.89
	PUZ-ZM200YKA	R32	675	6.3	4.25	9.2	6.21
	PUZ-ZM250YKA	R32	675	6.8	4.59	9.2	6.21
	PUHZ-ZRP35VKA2	R410A	2088	2.2	4.60	0.4	0.84
	PUHZ-ZRP50VKA2	R410A	2088	2.4	5.02	0.4	0.84
	PUHZ-ZRP60VHA2	R410A	2088	3.5	7.31	1.2	2.51
	PUHZ-ZRP71VHA2	R410A	2088	3.5	7.31	1.2	2.51
	PUHZ-ZRP100VKA3	R410A	2088	5.0	10.44	2.4	5.02
	PUHZ-ZRP100YKA3	R410A	2088	5.0	10.44	2.4	5.02
	PUHZ-ZRP125VKA3	R410A	2088	5.0	10.44	2.4	5.02
	PUHZ-ZRP125YKA3	R410A	2088	5.0	10.44	2.4	5.02
	PUHZ-ZRP140VKA3	R410A	2088	5.0	10.44	2.4	5.02
	PUHZ-ZRP140YKA3	R410A	2088	5.0	10.44	2.4	5.02
	PUHZ-ZRP200YKA3	R410A	2088	7.1	14.83	3.6	7.52
	PUHZ-ZRP250YKA3	R410A	2088	7.7	16.08	4.8	10.03
	PUZ-M100VKA	R32	675	3.1	2.09	4.1	2.77
	PUZ-M100YKA	R32	675	3.1	2.09	4.1	2.77
	PUZ-M125VKA	R32	675	3.6	2.43	5.0	3.38
	PUZ-M125YKA	R32	675	3.6	2.43	5.0	3.38
	PUZ-M140VKA	R32	675	3.6	2.43	5.0	3.38
	PUZ-M140YKA	R32	675	3.6	2.43	5.0	3.38
	PUZ-M200YKA	R32	675	5.6	3.78	7.2	4.86
	PUZ-M250YKA	R32	675	6.8	4.59	9.2	6.21
	PUHZ-P100VKA	R410A	2088	3.3	6.89	1.2	2.51
	PUHZ-P100YKA	R410A	2088	3.3	6.89	1.2	2.51
	PUHZ-P125VKA	R410A	2088	3.8	7.93	1.2	2.51
	PUHZ-P125YKA	R410A	2088	3.8	7.93	1.2	2.51
	PUHZ-P140VKA	R410A	2088	3.8	7.93	1.2	2.51
	PUHZ-P140YKA	R410A	2088	3.8	7.93	1.2	2.51
	PUHZ-P200YKA3	R410A	2088	6.5	13.58	3.6	7.52
	PUHZ-P250YKA3	R410A	2088	7.7	16.08	4.8	10.03
	PUHZ-SHW112VHA	R410A	2088	5.5	11.49	2.4	5.02
	PUHZ-SHW112YHA	R410A	2088	5.5	11.49	2.4	5.02
	PUHZ-SHW140VHA	R410A	2088	5.5	11.49	2.4	5.02
	PUHZ-SHW140YHA	R410A	2088	5.5	11.49	2.4	5.02
	PUHZ-FRP71VHA	R410A	2088	3.8	7.94	1.8	3.76
PUMY	PUMY-SP112VKM(-BS)	R410A	2088	3.5	7.31	9.0	18.79
	PUMY-SP112YKM(-BS)	R410A	2088	3.5	7.31	9.0	18.79
	PUMY-SP125VKM(-BS)	R410A	2088	3.5	7.31	9.0	18.79
	PUMY-SP125YKM(-BS)	R410A	2088	3.5	7.31	9.0	18.79
	PUMY-SP140VKM(-BS)	R410A	2088	3.5	7.31	9.0	18.79
	PUMY-SP140YKM(-BS)	R410A	2088	3.5	7.31	9.0	18.79
	PUMY-P112VKM5(-BS)	R410A	2088	4.8	10.02	13.8	28.81
	PUMY-P125VKM5(-BS)	R410A	2088	4.8	10.02	13.8	28.81
	PUMY-P140VKM5(-BS)	R410A	2088	4.8	10.02	13.8	28.81
	PUMY-P112YKM(E)4(-BS)	R410A	2088	4.8	10.02	13.8	28.81
	PUMY-P125YKM(E)4(-BS)	R410A	2088	4.8	10.02	13.8	28.81
	PUMY-P140YKM(E)4(-BS)	R410A	2088	4.8	10.02	13.8	28.81
	PUMY-P200YKM2 (-BS)	R410A	2088	7.3	15.24	13.1	27.35

R32 REFRIGERANT

R32 REFRIGERANT PROPERTIES

Under the conditions shown below, there is a possibility that R32 could ignite.

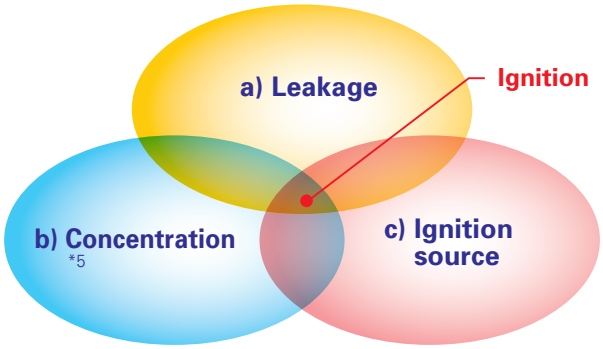

	R32	R410A	R22
Chemical formula	CH_2F_2	CH_2F_2/CHF_2CF_3	$CHClF_2$
Composition (blend ratio wt. %)	Single composition	R32/R125 (50/50 wt %)	Single composition
Ozone depletion potential (ODP)	0	0	0.055
Global warming potential (GWP) *1	675	2088	1810
LFL(vol.%) *2	13.3	–	–
UFL(vol.%) *3	29.3	–	–
Flammability *4	Lower flammability (2L)	No flame propagation (1)	No flame propagation (1)

*1 IPCC 4th assessment report.
*2 LFL : Lower flammable limit
*3 UFL : Upper flammable limit
*4 ISO 817:2014
*5 R32 consistency is higher than LFL*1 and lower than UFL*2.

Although R32 is classified as low flammability, the possibility of igniting can be eliminated by ensuring the following three points.

a) Do not leak refrigerant.

<Installation> ·Vacuum drying should be done. Air purging is prohibited.
·Follow "4. Installation Points of Refrigerant Piping Work".
<Repair/Relocation/Removal> ·Pump down or recovering refrigerant should be done.

b) Prevent concentration.

·Ventilate during installation and servicing, such as open the door or window and use a fan.
·Follow "2. Installation Restrictions".

c) Keep ignition source away from the unit.

·Do not braze pipe and unit which contain refrigerant. Before brazing, refrigerant should be recovered.
·Do not install unit while the electricity is turned on. Turn off electricity at the fuse box and check the wiring using a tester.
·Do not smoke when working or during transportation of the product.

Note **Both R32 / R410A emit a toxic gas when coming into contact with an open flame.**

INSTALLATION RESTRICTIONS

In order to prevent the refrigerant from igniting, use the following instructions during installation.

1) Indoor Units

Install in a room with a floor area of Amin* or more, corresponding to refrigerant quantity M.
(M = factory-charged refrigerant + locally added refrigerant)

Install the indoor unit so that the height from the floor to the bottom of the indoor unit is hO*.

* Refer to table and drawings below.

<M Series>

M[kg]	Amin[m²]
0.7	1.7
0.8	2.0
0.9	2.2
1.0	2.5
1.1	2.7
1.2	3.0
1.3	3.2
1.4	3.4
1.5	3.7
1.6	3.9
1.7	4.2
1.8	4.4
1.9	4.6
2.0	4.9

<P Series>

M[kg]	Amin[m²]
1.0	4
1.5	6
2.0	8
2.5	10
3.0	12
3.5	14
4.0	16
4.5	20
5.0	24
5.5	29
6.0	35
6.5	41
7.0	47
7.5	54

<MXZ Series>

M[kg]	Amin[m²]
1.0	3
1.5	4.5
2.0	6
2.5	7.5
3.0	9
3.5	12
4.0	15.5
4.5	20
5.0	24
5.5	29
6.0	35
6.5	41
7.0	47
7.5	54

<Only for MFZ-KT>

M[kg]	Amin[m²]
1.00	No requirements
1.50	
1.80	
1.84	3.63
1.90	3.75
2.00	3.95
2.10	4.15
2.20	4.34
2.30	4.54
2.40	4.74

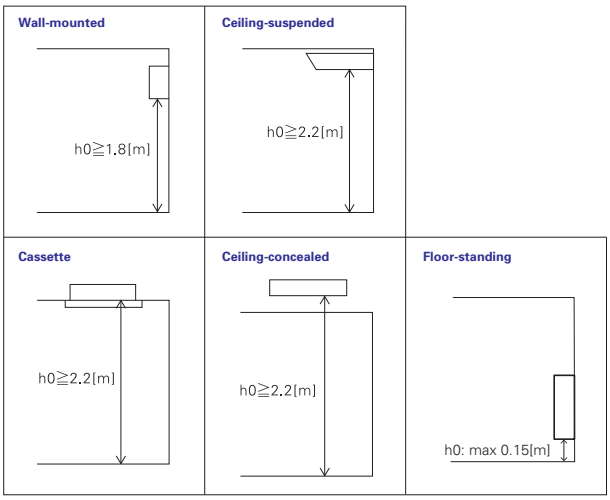

2) Outdoor Units

Install outdoor units in a place where at least one of the four sides is open or in a sufficiently large space without depressions.

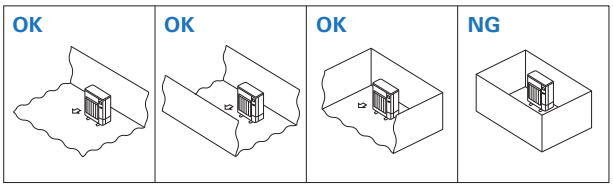

If you unavoidably install a unit in a space where all four sides are blocked or there are depressions, confirm that one of these situations (A, B or C) is satisfied.

A Secure sufficient installation space (minimum installation area Amin).

Install in a space with an installation area of Amin* or more, corresponding to refrigerant quantity M. (M = factory-charged refrigerant + locally added refrigerant)

* Refer to table and drawings below.

M[kg]	Amin[m²]
1.0	12
1.5	17
2.0	23
2.5	28
3.0	34
3.5	39
4.0	45
4.5	50
5.0	56
5.5	62
6.0	67
6.5	73
7.0	78
7.5	84

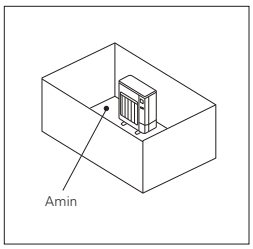

B Install in a space with a depression height of ≦0.125[m].

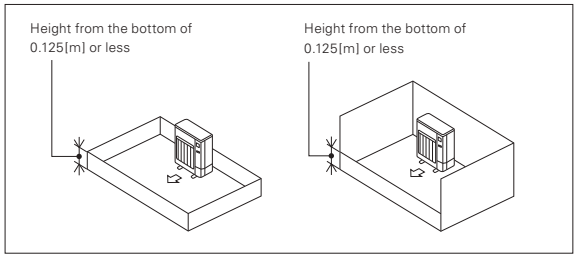

C Create an appropriate open ventilation area.

Make sure that the width of the open area is 0.9[m] or more and the height of the open area is 0.15[m] or more.
However, the height from the bottom of the installation space to the bottom edge of the open area should be 0.125[m] or less.
More than 75% of the ventilation area should be open to allow air circulation.

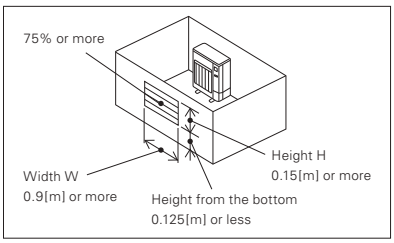

Note **These countermeasures (A, B or C) are for keeping safety not for specification guarantee.**

● Models with R32 Refrigerant: MSZ-L Series (single connection)

LOSSNAY SYSTEM

LOSSNAY LINEUP

Application		Model \ Airflow	50 CMH	100 CMH	150 CMH	250 CMH	350 CMH	500 CMH	650 CMH	800 CMH	1000 CMH	1500 CMH	2000 CMH	2500 CMH
Centralized Ventilation	Ceiling Concealed	LGH-RVX Series			●	●	●	●	●	●	●	●	●	
		LGH-RVXT Series										●	●	●
		GUF Series						●			●			
		GUG Series (Dx-coil unit for Lossnay LGH-RVX/RVXT Series)						●	●	●	●	●	●	●
		VL-220CZGV-E				●								
	Vertical Type	VL-CZPVU Series				●	●							
Decentralized Ventilation	Wall Mounted Type	VL-100(E)U5-E		●										
		VL-50(E)S2-E VL-50SR2-E	●											

LGH-RVX Series
A commercially oriented system that can be used to deliver high performance and functions virtually anywhere.

LGH-RVXT Series
Thin, large airflow models of the LGH series that deliver high performance and functions.

GUF Series
Heat recovery units with a heating and cooling system that uses the City Multi outdoor unit as a heat source.

Dx-coil unit (GUG Series)
Temperature control equipment that works with Lossnay units and Mr. Slim outdoor units.

VL-CZPVU Series
Vertical type for residential use centralized ventilation with sensible heat exchange.

VL-220CZGV-E
Centralized ventilation with sensible heat exchange, for residential use.

VL-100(E)U5-E, VL-50(E)S2-E, VL-50SR2-E
Wall-mounted models. Particularly suitable for houses and small offices.

REMOTE CONTROLLER

PZ-61DR-E

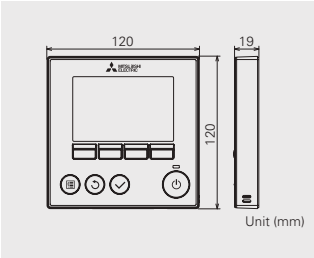

PZ-43SMF-E

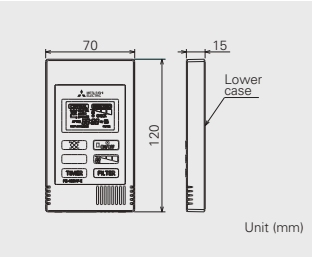

Function (Communicating mode)	PZ-61DR-E		PZ-43SMF-E	
	LGH-RVX/RVXT	VL-220CZGV-E	LGH-RVX/RVXT	VL-220CZGV-E
Fan speed selection	4 fan speeds	4 fan speeds	2 of 4 fan speeds	2 of 4 fan speeds
Ventilation mode selection	Energy recovery / Bypass / Auto	Heat recovery / Bypass / Auto (available with optional part P-133DUE-E)	Energy recovery / Bypass / Auto	Heat recovery / Bypass / Auto (available with optional part P-133DUE-E)
Night-purge setting (time and fan speed)	Yes	No	No	No
Function setting from RC	Yes	Yes	No	No
Bypass temp. free setting	Yes	Yes (available with optional part P-133DUE-E)	No	No
Heater-On temp. free setting	Yes	No	No	No
Fan power change after installation	Yes	Yes	No	No
ON/OFF timer	Yes	Yes	Yes	Yes
Auto-Off timer	Yes	Yes	No	No
Weekly timer	Yes	Yes	No	No
Operation restrictions (ON/OFF, ventilation mode, fan speed)	Yes	Yes (ventilation mode is available with optional part P-133DUE-E)	No	No
Operation restrictions (fan speed skip setting)	Yes	Yes	No	No
Screen contrast adjustment	Yes	Yes	No	No
Language selection	Yes (8 languages)	Yes (8 languages)	No (English only)	No (English only)
Initializing	Yes	Yes	No	No
Filter cleaning sign	Yes	Yes	Yes	Yes
Lossnay core cleaning sign	Yes	No	No	No
Error indication	Yes	Yes	Yes	Yes
Error history	Yes	Yes	No	No

LOSSNAY

Lossnay ventilation systems are renowned industry-wide for their efficiency. They offer environment-friendly energy recovery and humidity control, and enable air conditioning systems to simultaneously provide optimum room comfort and energy savings.

Indoor Air Quality Inside a Building is Optimized Through Temperature and Humidity Exchange by Lossnay

Lossnay is a total heat exchange ventilation system that uses paper characteristics to perform temperature (sensible heat) and humidity (latent heat) exchange.

● The concept of sensible heat and latent heat exchange using Lossnay core

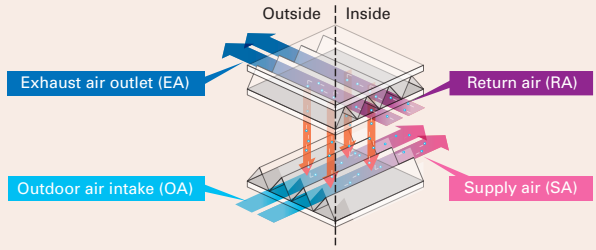

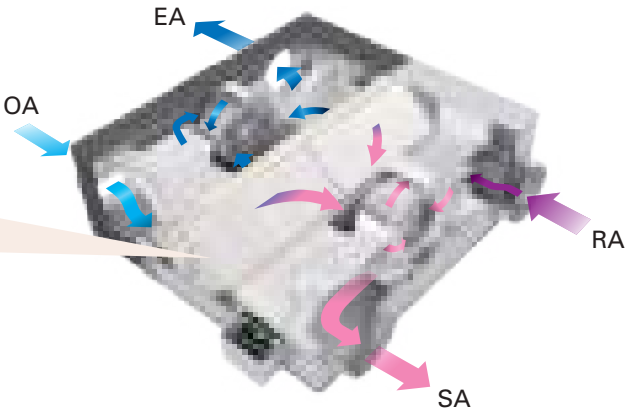

What Can Be Improved by Introducing Lossnay?

● Ventilation with maximized comfort

In summer

Air similar to the conditions of cooled (dehumidified) indoor air is supplied.

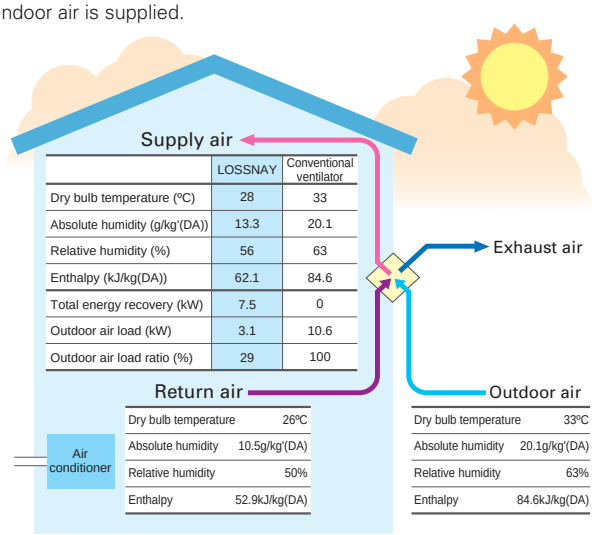

	LOSSNAY	Conventional ventilator
Dry bulb temperature (ºC)	28	33
Absolute humidity (g/kg'(DA))	13.3	20.1
Relative humidity (%)	56	63
Enthalpy (kJ/kg(DA))	62.1	84.6
Total energy recovery (kW)	7.5	0
Outdoor air load (kW)	3.1	10.6
Outdoor air load ratio (%)	29	100

Return air	
Dry bulb temperature	26ºC
Absolute humidity	10.5g/kg'(DA)
Relative humidity	50%
Enthalpy	52.9kJ/kg(DA)

Outdoor air	
Dry bulb temperature	33ºC
Absolute humidity	20.1g/kg'(DA)
Relative humidity	63%
Enthalpy	84.6kJ/kg(DA)

Heat recovery calculation

Indoor supply-air temperature (ºC) = Outdoor temperature (ºC) − (Outdoor temperature (ºC) − Indoor temperature (ºC)) × Temp recovery efficiency (%)

Calculation example: 28ºC = 33ºC – (33ºC – 26ºC) × 71.5%

*The above applies to the case of LGH-100RVX (fan speed 4).

In winter

Air similar to the conditions of heated (humidified) indoor air is supplied.

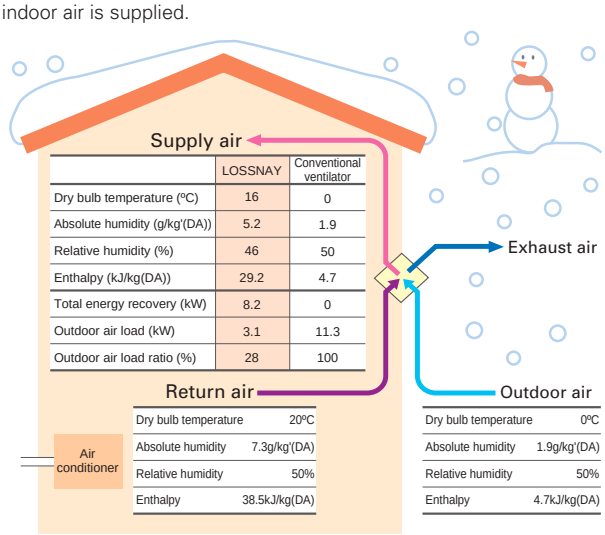

	LOSSNAY	Conventional ventilator
Dry bulb temperature (ºC)	16	0
Absolute humidity (g/kg'(DA))	5.2	1.9
Relative humidity (%)	46	50
Enthalpy (kJ/kg(DA))	29.2	4.7
Total energy recovery (kW)	8.2	0
Outdoor air load (kW)	3.1	11.3
Outdoor air load ratio (%)	28	100

Return air	
Dry bulb temperature	20ºC
Absolute humidity	7.3g/kg'(DA)
Relative humidity	50%
Enthalpy	38.5kJ/kg(DA)

Outdoor air	
Dry bulb temperature	0ºC
Absolute humidity	1.9g/kg'(DA)
Relative humidity	50%
Enthalpy	4.7kJ/kg(DA)

Heat recovery calculation

Indoor supply-air temperature (ºC) = (Indoor temperature (ºC) − Outdoor temperature (ºC)) × Temp recovery efficiency (%) + Outdoor temperature (ºC)

Calculation example: 16ºC = (20ºC – 0ºC) × 80% + 0ºC

*The above applies to the case of LGH-100RVX (fan speed 4).

Commercial Use Lossnay

LGH-RVX Series (Standard model)

Power consumption reduced further with the introduction of a DC motor

Low power consumption is realised with the introduction of a high efficiency brushless DC motor. Compared to models with an AC motor, power consumption is reduced.

Comparison between current and previous power consumption
(Current model: Fan speed 4 at 230V 50Hz, Previous model: Extra-High at 220V 50Hz)

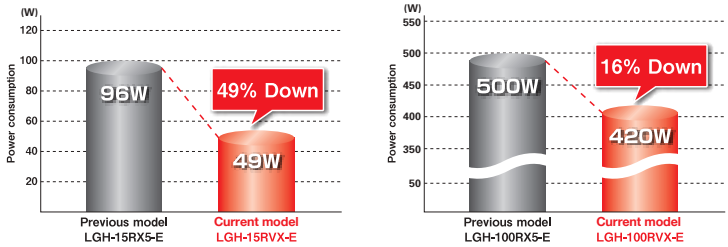

Improved airflow range

Wide airflow range

Each fan speed has a range setting of 25, 50, 75 and 100%, allowing much finer airflow control. When used in combination with the CO_2 sensor or timer function, airflow can be controlled according to conditions that realize better performance and reduce power consumption.

Fan speed adjustment function

The default fan speed value can be adjusted slightly. Use the PZ-61DR-E remote controller to reset the speed.
1) Considering the total hours of Lossnay operation (filter clogging), fan power can be adjusted automatically after a given period of time.
2) After the unit is installed, fine adjustments can be made if the airflow is slightly lower than the desired airflow.

■ Characteristic curves of the LGH-RVX/RVXT Series

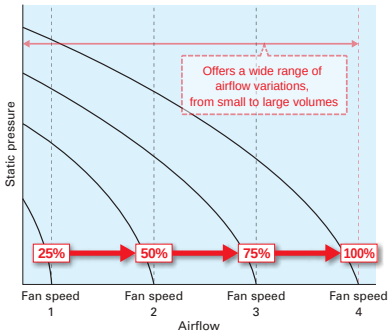

■ P-Q curve image

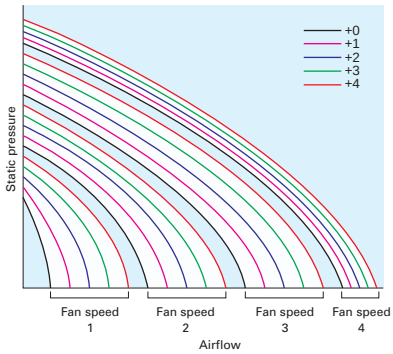

LGH-RVXT Series (Thin body type)

The LGH-RVXT series has a large airflow of 1500 - 2500 CMH but a thin body of approximately 500mm. Therefore, installing the unit in the ceiling is easy.

■ LGH-150/200RVX-E

Height: 808mm

■ LGH-150/200/250RVXT-E

Height: 500mm

38% Thinner body

■ LGH-RVXT installation image

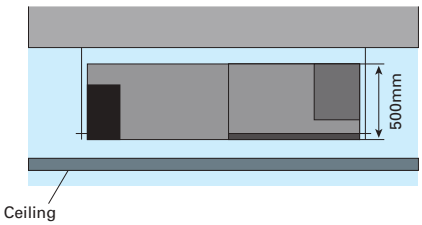

GUF Series (Lossnay with Dx-coil unit)

Along with Lossnay ventilation, the OA processing unit is really two units in one, functioning as the main air conditioner when the load is light and adding supplemental air conditioning when the load is heavy.

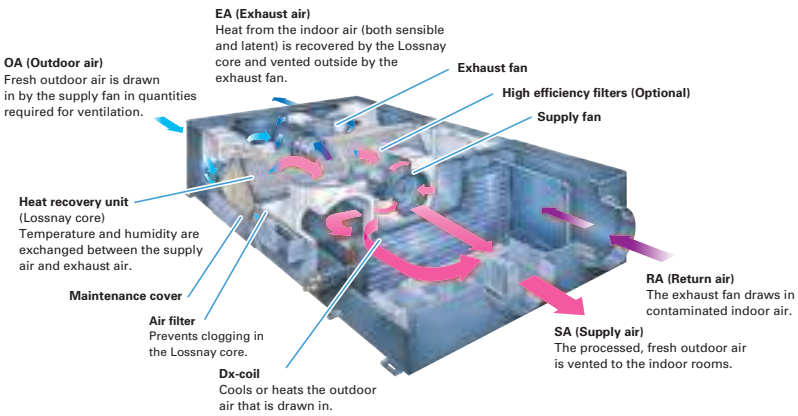

Commercial Use Lossnay Specifications

RVX Series

LGH-15RVX-E

Electrical power supply		220-240V/50Hz, 220V/60Hz							
Ventilation mode		Heat recovery mode				Bypass mode			
Fan speed		SP4	SP3	SP2	SP1	SP4	SP3	SP2	SP1
Running current (A)		0.40	0.24	0.15	0.10	0.41	0.25	0.15	0.10
Input power (W)		49	28	14	7	52	28	14	8
Airflow	(m^3/h)	150	113	75	38	150	113	75	38
	(L/s)	42	31	21	10	42	31	21	10
External static pressure (Pa)		95	54	24	6	95	54	24	6
Temperature exchange efficiency (%)		80	81	83	84	–	–	–	–
Enthalpy exchange efficiency (%)	Heating	73	75.5	78	79	–	–	–	–
	Cooling	71	74.5	78	79	–	–	–	–
Noise (dB) (Measured at 1.5m under the center of the unit in an anechoic chamber)		28	24	19	17	29	24	19	18
Weight (kg)		20							
Specific energy consumption class		A							

Characteristic Curves

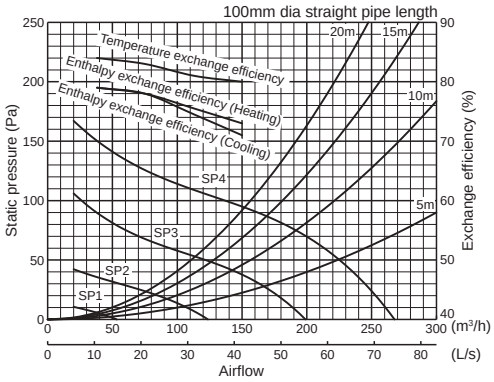

Dimensions

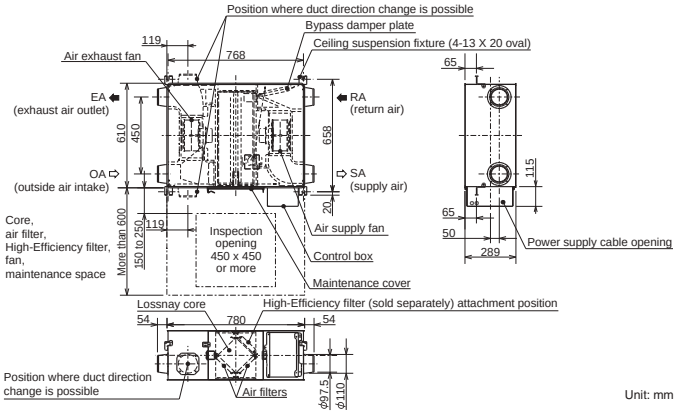

LGH-25RVX-E

Electrical power supply		220-240V/50Hz, 220V/60Hz							
Ventilation mode		Heat recovery mode				Bypass mode			
Fan speed		SP4	SP3	SP2	SP1	SP4	SP3	SP2	SP1
Running current (A)		0.48	0.28	0.16	0.10	0.48	0.29	0.16	0.11
Input power (W)		62	33	16	7.5	63	35	17	9
Airflow	(m^3/h)	250	188	125	63	250	188	125	63
	(L/s)	69	52	35	17	69	52	35	17
External static pressure (Pa)		85	48	21	5	85	48	21	5
Temperature exchange efficiency (%)		79	80	82	86	–	–	–	–
Enthalpy exchange efficiency (%)	Heating	69.5	72	76	83	–	–	–	–
	Cooling	68	70	74.5	83	–	–	–	–
Noise (dB) (Measured at 1.5m under the center of the unit in an anechoic chamber)		27	22	20	17	27.5	23	20	17
Weight (kg)		23							
Specific energy consumption class		A							

Characteristic Curves

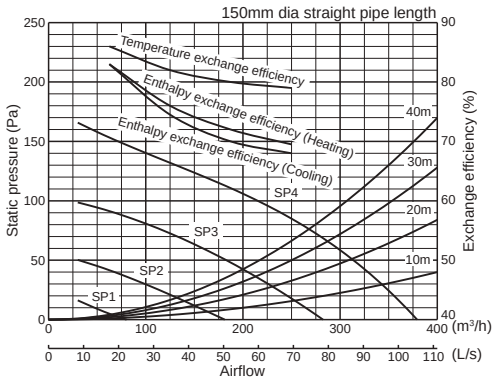

Dimensions

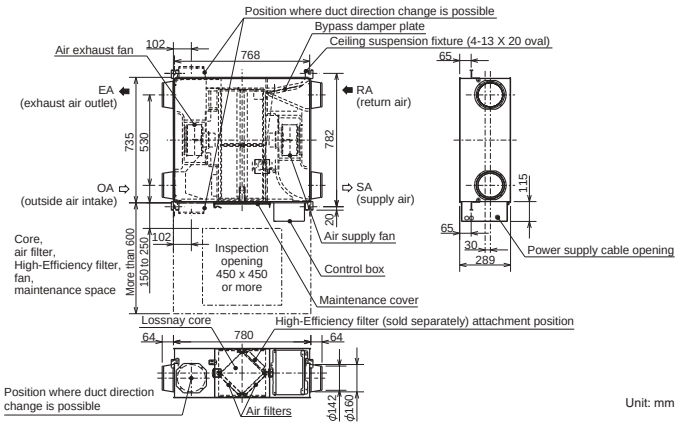

■For LGH-RVX and LGH-RVXT series
*The running current, the input power, the efficiency and the noise are based on the rated airflow, 230V/50Hz, and 220V/60Hz.
*Figures in the chart is measured according to Japan Industrial Standard (JIS B 8628). Characteristic Curves are measured by chamber method.
*For specifications at other frequencies, contact your dealer.

LGH-35RVX-E

Electrical power supply		220-240V/50Hz, 220V/60Hz							
Ventilation mode		Heat recovery mode				Bypass mode			
Fan speed		SP4	SP3	SP2	SP1	SP4	SP3	SP2	SP1
Running current (A)		0.98	0.54	0.26	0.12	0.98	0.56	0.28	0.13
Input power (W)		140	70	31	11	145	72	35	13
Airflow	(m^3/h)	350	263	175	88	350	263	175	88
	(L/s)	97	73	49	24	97	73	49	24
External static pressure (Pa)		160	90	40	10	160	90	40	10
Temperature exchange efficiency (%)		80	82.5	86	88.5	–	–	–	–
Enthalpy exchange efficiency (%)	Heating	71.5	74	78.5	83.5	–	–	–	–
	Cooling	71	73	78	82	–	–	–	–
Noise (dB) (Measured at 1.5m under the center of the unit in an anechoic chamber)		32	28	20	17	32.5	28	20	18
Weight (kg)		30							

Characteristic Curves

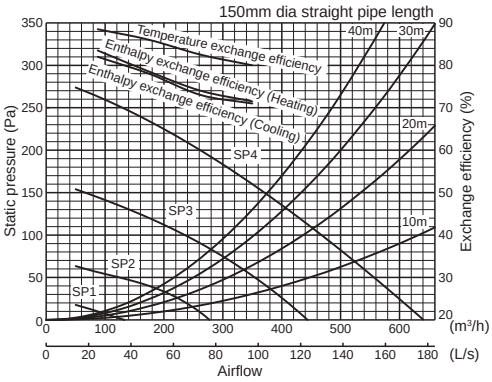

Dimensions

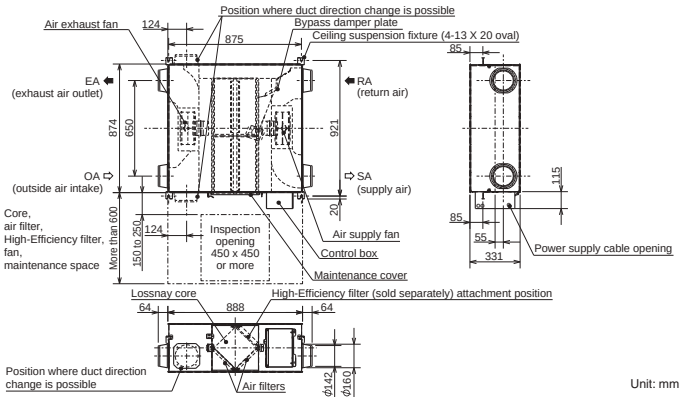

LGH-50RVX-E

Electrical power supply		220-240V/50Hz, 220V/60Hz							
Ventilation mode		Heat recovery mode				Bypass mode			
Fan speed		SP4	SP3	SP2	SP1	SP4	SP3	SP2	SP1
Running current (A)		1.15	0.59	0.26	0.13	1.15	0.59	0.27	0.13
Input power (W)		165	78	32	12	173	81	35	14
Airflow	(m^3/h)	500	375	250	125	500	375	250	125
	(L/s)	139	104	69	35	139	104	69	35
External static pressure (Pa)		120	68	30	8	120	68	30	8
Temperature exchange efficiency (%)		78	81	83.5	87	–	–	–	–
Enthalpy exchange efficiency (%)	Heating	69	71	75	82.5	–	–	–	–
	Cooling	66.5	68	72.5	82	–	–	–	–
Noise (dB) (Measured at 1.5m under the center of the unit in an anechoic chamber)		34	28	19	18	35	29	20	18
Weight (kg)		33							

Characteristic Curves

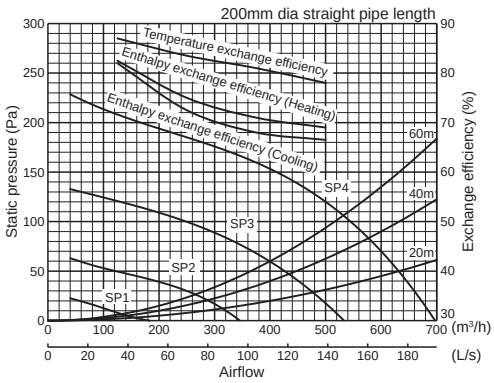

Dimensions

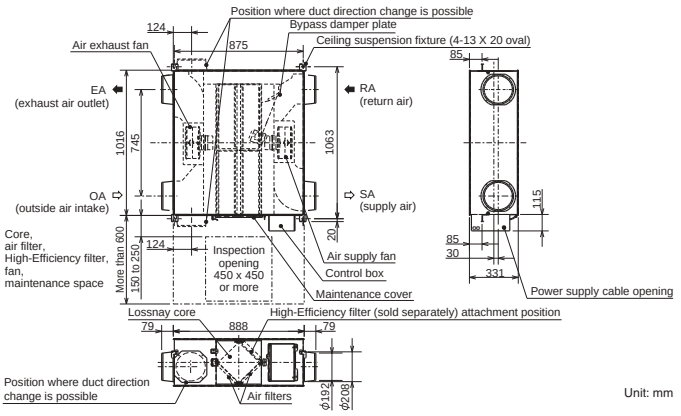

■For LGH-RVX and LGH-RVXT series
*The running current, the input power, the efficiency and the noise are based on the rated airflow, 230V/50Hz, and 220V/60Hz.
*Figures in the chart is measured according to Japan Industrial Standard (JIS B 8628). Characteristic Curves are measured by chamber method.
*For specifications at other frequencies, contact your dealer.

Commercial Use Lossnay Specifications

LGH-65RVX-E

Electrical power supply		220-240V/50Hz, 220V/60Hz							
Ventilation mode		Heat recovery mode				Bypass mode			
Fan speed		SP4	SP3	SP2	SP1	SP4	SP3	SP2	SP1
Running current (A)		1.65	0.90	0.39	0.15	1.72	0.86	0.38	0.16
Input power (W)		252	131	49	15	262	131	47	17
Airflow	(m^3/h)	650	488	325	163	650	488	325	163
	(L/s)	181	135	90	45	181	135	90	45
External static pressure (Pa)		120	68	30	8	120	68	30	8
Temperature exchange efficiency (%)		77	81	84	86	–	–	–	–
Enthalpy exchange efficiency (%)	Heating	68.5	71	76	82	–	–	–	–
	Cooling	66	69.5	74	81	–	–	–	–
Noise (dB) (Measured at 1.5m under the center of the unit in an anechoic chamber)		34.5	29	22	18	35.5	29	22	18
Weight (kg)		38							

Characteristic Curves

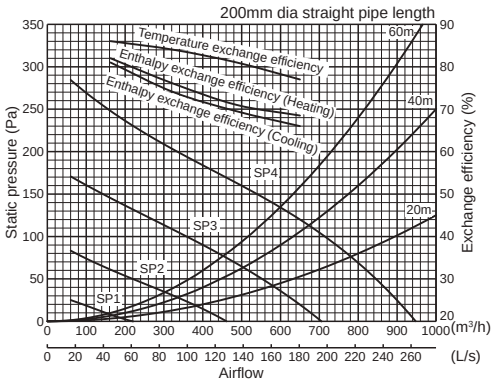

Dimensions

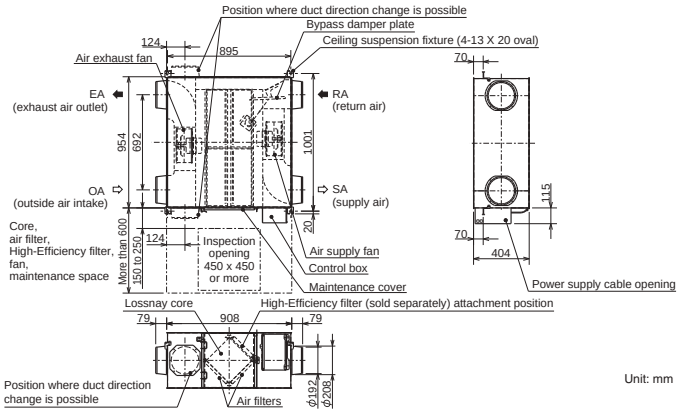

LGH-80RVX-E

Electrical power supply		220-240V/50Hz, 220V/60Hz							
Ventilation mode		Heat recovery mode				Bypass mode			
Fan speed		SP4	SP3	SP2	SP1	SP4	SP3	SP2	SP1
Running current (A)		1.82	0.83	0.36	0.15	1.97	0.86	0.40	0.15
Input power (W)		335	151	60	18	340	151	64	20
Airflow	(m^3/h)	800	600	400	200	800	600	400	200
	(L/s)	222	167	111	56	222	167	111	56
External static pressure (Pa)		150	85	38	10	150	85	38	10
Temperature exchange efficiency (%)		79	82.5	84	85	–	–	–	–
Enthalpy exchange efficiency (%)	Heating	71	73.5	78	81	–	–	–	–
	Cooling	70	72.5	78	81	–	–	–	–
Noise (dB) (Measured at 1.5m under the center of the unit in an anechoic chamber)		34.5	30	23	18	36	30	23	18
Weight (kg)		48							

Characteristic Curves

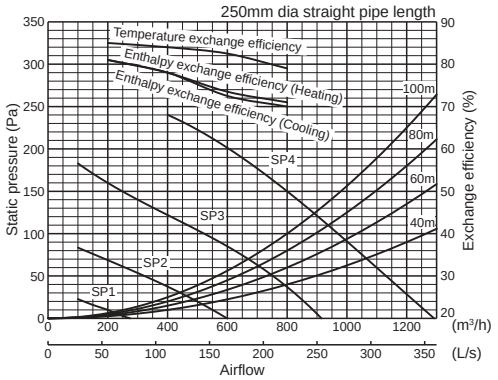

Dimensions

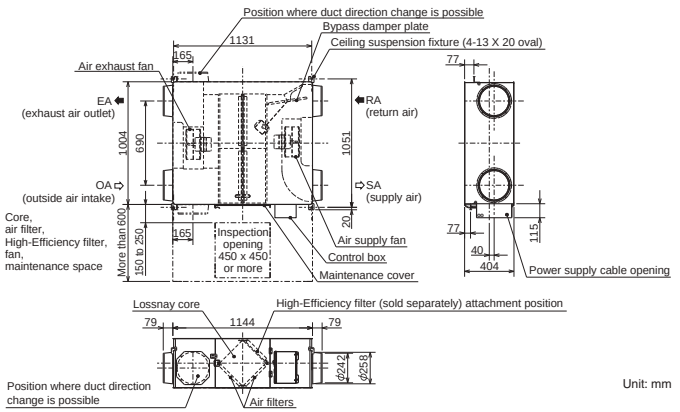

■For LGH-RVX and LGH-RVXT series
*The running current, the input power, the efficiency and the noise are based on the rated airflow, 230V/50Hz, and 220V/60Hz.
*Figures in the chart is measured according to Japan Industrial Standard (JIS B 8628). Characteristic Curves are measured by chamber method.
*For specifications at other frequencies, contact your dealer.

LGH-100RVX-E

Electrical power supply		220-240V/50Hz, 220V/60Hz							
Ventilation mode		Heat recovery mode				Bypass mode			
Fan speed		SP4	SP3	SP2	SP1	SP4	SP3	SP2	SP1
Running current (A)		2.50	1.20	0.50	0.17	2.50	1.20	0.51	0.19
Input power (W)		420	200	75	21	420	200	75	23
Airflow	(m^3/h)	1000	750	500	250	1000	750	500	250
	(L/s)	278	208	139	69	278	208	139	69
External static pressure (Pa)		170	96	43	11	170	96	43	11
Temperature exchange efficiency (%)		80	83	86.5	89.5	–	–	–	–
Enthalpy exchange efficiency (%)	Heating	72.5	74	78	87	–	–	–	–
	Cooling	71	73	77	85.5	–	–	–	–
Noise (dB) (Measured at 1.5m under the center of the unit in an anechoic chamber)		37	31	23	18	38	32	24	18
Weight (kg)		54							

Characteristic Curves

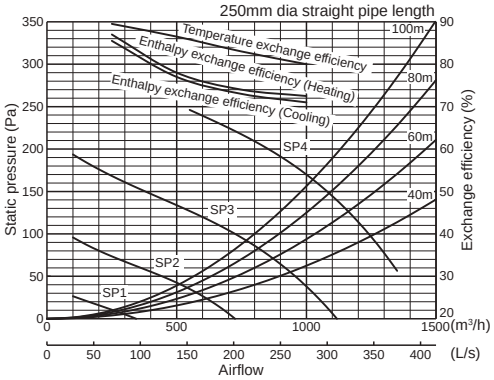

Dimensions

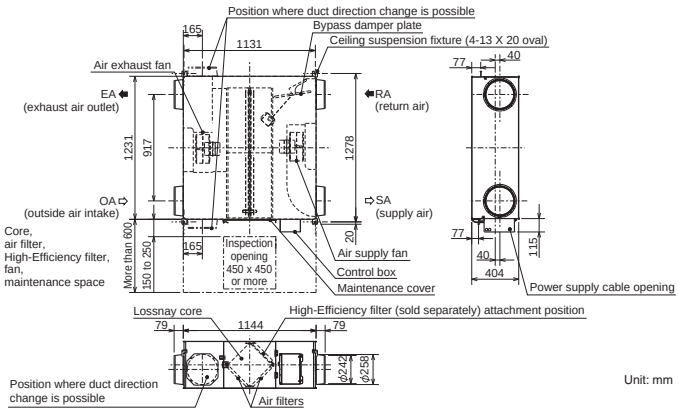

LGH-150RVX-E

Electrical power supply		220-240V/50Hz, 220V/60Hz							
Ventilation mode		Heat recovery mode				Bypass mode			
Fan speed		SP4	SP3	SP2	SP1	SP4	SP3	SP2	SP1
Running current (A)		3.71	1.75	0.70	0.29	3.85	1.78	0.78	0.30
Input power (W)		670	311	123	38	698	311	124	44
Airflow	(m^3/h)	1500	1125	750	375	1500	1125	750	375
	(L/s)	417	313	208	104	417	313	208	104
External static pressure (Pa)		175	98	44	11	175	98	44	11
Temperature exchange efficiency (%)		80	82.5	84	85	–	–	–	–
Enthalpy exchange efficiency (%)	Heating	72	73.5	78	81	–	–	–	–
	Cooling	70.5	72.5	78	81	–	–	–	–
Noise (dB) (Measured at 1.5m under the center of the unit in an anechoic chamber)		39	32	24	18	40.5	33	26	18
Weight (kg)		98							

Characteristic Curves

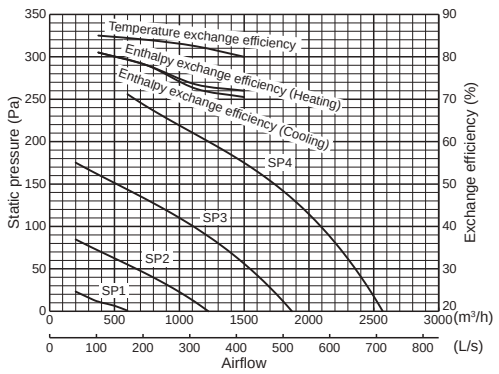

Dimensions

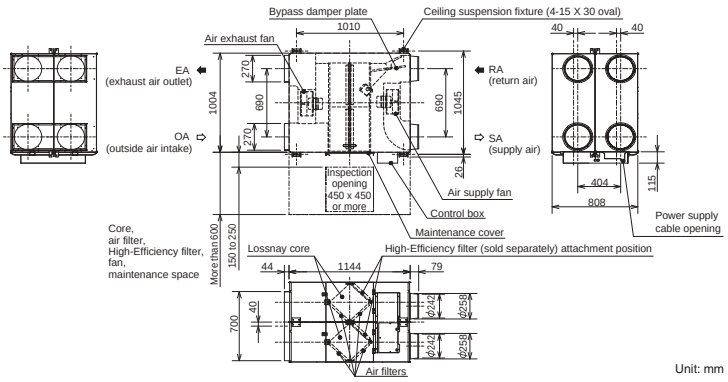

■For LGH-RVX and LGH-RVXT series
*The running current, the input power, the efficiency and the noise are based on the rated airflow, 230V/50Hz, and 220V/60Hz.
*Figures in the chart is measured according to Japan Industrial Standard (JIS B 8628). Characteristic Curves are measured by chamber method.
*For specifications at other frequencies, contact your dealer.

Commercial Use Lossnay Specifications

LGH-200RVX-E

Electrical power supply		220-240V/50Hz, 220V/60Hz							
Ventilation mode		Heat recovery mode				Bypass mode			
Fan speed		SP4	SP3	SP2	SP1	SP4	SP3	SP2	SP1
Running current (A)		4.88	2.20	0.88	0.33	4.54	2.06	0.87	0.35
Input power (W)		850	400	153	42	853	372	150	49
Airflow	(m^3/h)	2000	1500	1000	500	2000	1500	1000	500
	(L/s)	556	417	278	139	556	417	278	139
External static pressure (Pa)		150	84	38	10	150	84	38	10
Temperature exchange efficiency (%)		80	83	86.5	89.5	–	–	–	–
Enthalpy exchange efficiency (%)	Heating	72.5	74	78	87	–	–	–	–
	Cooling	71	73	77	85.5	–	–	–	–
Noise (dB) (Measured at 1.5m under the center of the unit in an anechoic chamber)		40	36	28	18	41	36	27	19
Weight (kg)		110							

Characteristic Curves

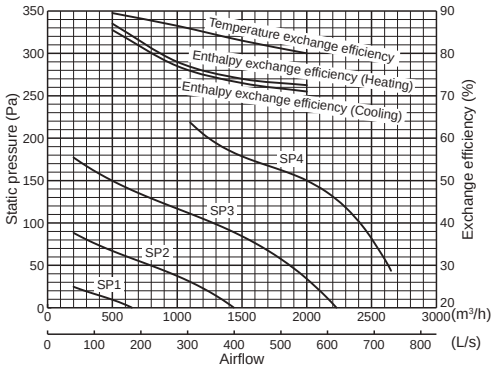

Dimensions

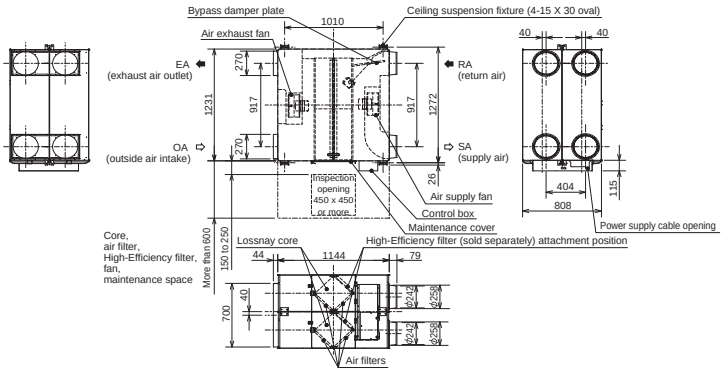

Unit: mm

RVXT Series

LGH-150RVXT-E

Electrical power supply		220-240V/50Hz, 220V/60Hz							
Ventilation mode		Heat recovery mode				Bypass mode			
Fan speed		SP4	SP3	SP2	SP1	SP4	SP3	SP2	SP1
Running current (A)		4.30	2.40	1.10	0.36	3.40	1.80	0.77	0.31
Input power (W)		792	421	176	48	625	334	134	37
Airflow	(m^3/h)	1500	1125	750	375	1500	1125	750	375
	(L/s)	417	313	208	104	417	313	208	104
External static pressure (Pa)	Supply	175	98	44	11	175	98	44	11
	Return	100	56	25	6	100	56	25	6
Temperature exchange efficiency (%)		80	80.5	81	81.5	–	–	–	–
Enthalpy exchange efficiency (%)	Heating	70	71	73	75	–	–	–	–
	Cooling	69	70	72	74	–	–	–	–
Noise (dB) (Measured at 1.5m under the center of the unit in an anechoic chamber)		39.5	35.5	29.5	22	39	33	26.5	20.5
Weight (kg)		156							

Characteristic Curves

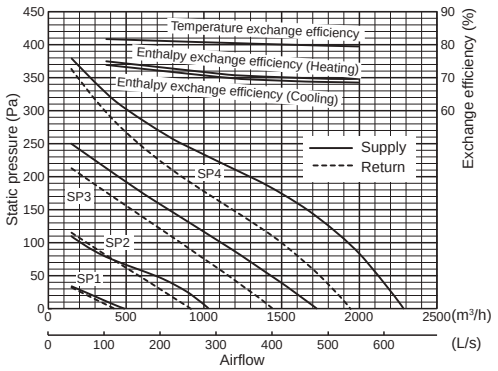

Dimensions

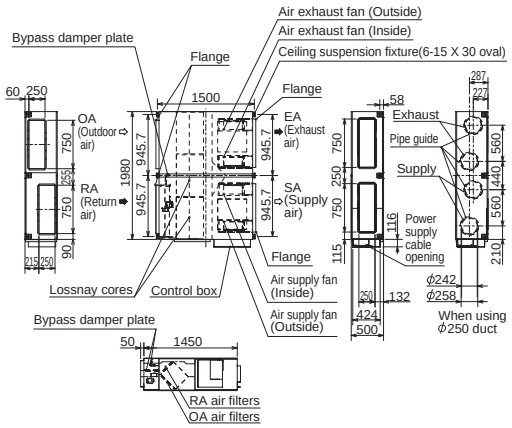

Unit: mm

■For LGH-RVX and LGH-RVXT series
*The running current, the input power, the efficiency and the noise are based on the rated airflow, 230V/50Hz, and 220V/60Hz.
*Figures in the chart is measured according to Japan Industrial Standard (JIS B 8628). Characteristic Curves are measured by chamber method.
*For specifications at other frequencies, contact your dealer.

LGH-200RVXT-E

Electrical power supply		220-240V/50Hz, 220V/60Hz							
Ventilation mode		Heat recovery mode				Bypass mode			
Fan speed		SP4	SP3	SP2	SP1	SP4	SP3	SP2	SP1
Running current (A)		5.40	2.70	1.10	0.39	5.00	2.20	0.85	0.34
Input power (W)		1000	494	197	56	916	407	150	45
Airflow	(m^3/h)	2000	1500	1000	500	2000	1500	1000	500
	(L/s)	556	417	278	139	556	417	278	139
External static pressure (Pa)	Supply	175	98	44	11	175	98	44	11
	Return	100	56	25	6	100	56	25	6
Temperature exchange efficiency (%)		80	81	82.5	84	–	–	–	–
Enthalpy exchange efficiency (%)	Heating	72.5	73.5	77	83	–	–	–	–
	Cooling	70	71	74.5	80.5	–	–	–	–
Noise (dB) (Measured at 1.5m under the center of the unit in an anechoic chamber)		39.5	35.5	28	22	40.5	34.5	27	20.5
Weight (kg)		159							

Characteristic Curves

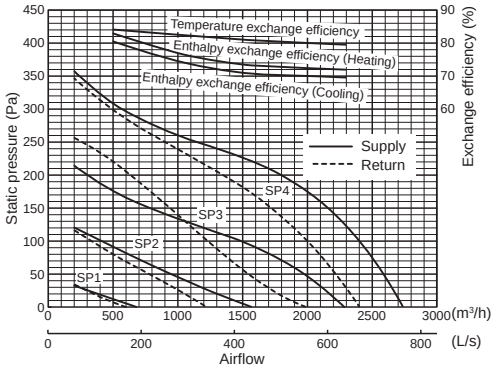

Dimensions

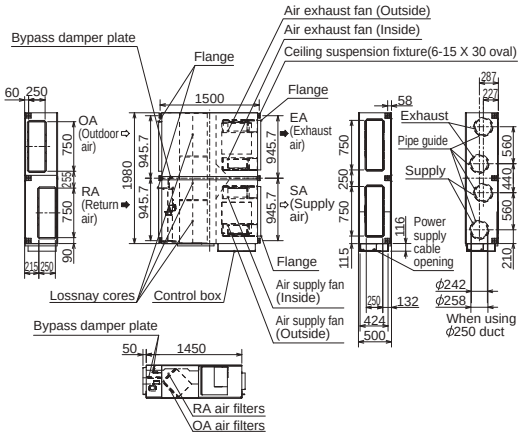

Unit: mm

LGH-250RVXT-E

Electrical power supply		220-240V/50Hz, 220V/60Hz							
Ventilation mode		Heat recovery mode				Bypass mode			
Fan speed		SP4	SP3	SP2	SP1	SP4	SP3	SP2	SP1
Running current (A)		7.60	3.60	1.40	0.57	6.90	3.10	1.30	0.49
Input power (W)		1446	687	244	82	1298	587	212	69
Airflow	(m^3/h)	2500	1875	1250	625	2500	1875	1250	625
	(L/s)	694	521	347	174	694	521	347	174
External static pressure (Pa)	Supply	175	98	44	11	175	98	44	11
	Return	100	56	25	6	100	56	25	6
Temperature exchange efficiency (%)		77	79	80.5	82.5	–	–	–	–
Enthalpy exchange efficiency (%)	Heating	68	71.5	74	79	–	–	–	–
	Cooling	65.5	69	71.5	76.5	–	–	–	–
Noise (dB) (Measured at 1.5m under the center of the unit in an anechoic chamber)		43	39	32	24	44	38.5	31	22.5
Weight (kg)		198							

Characteristic Curves

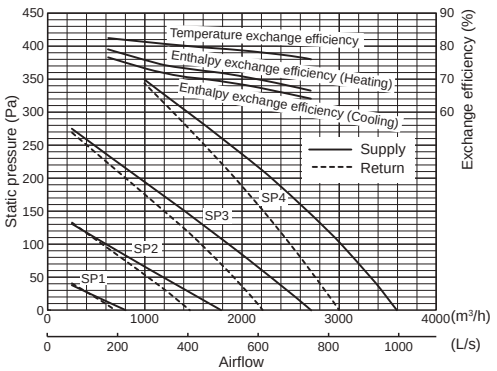

Dimensions

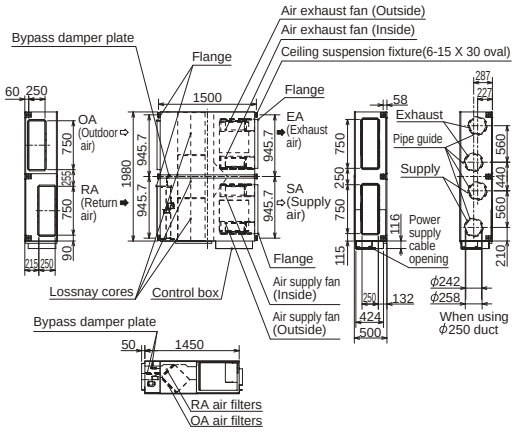

Unit: mm

■For LGH-RVX and LGH-RVXT series
*The running current, the input power, the efficiency and the noise are based on the rated airflow, 230V/50Hz, and 220V/60Hz.
*Figures in the chart is measured according to Japan Industrial Standard (JIS B 8628). Characteristic Curves are measured by chamber method.
*For specifications at other frequencies, contact your dealer.

Commercial Use Lossnay Specifications

GUF Series

GUF-50RD4

Electrical power supply		220-240V/50Hz			
Ventilation mode		Heat recovery mode		Bypass mode	
Fan speed		High	Low	High	Low
Running current (A)		1.15	0.70	1.15	0.70
Input power (W)		235-265	150-165	235-265	150-165
Airflow	(m^3/h)	500	400	500	400
	(L/s)	139	111	139	111
External static pressure (Pa)		140	90	140	90
Temperature exchange efficiency (%)		77.5	80	–	–
Enthalpy exchange efficiency (%)	Heating	68	71	–	–
	Cooling	65	67	–	–
Cooling capacity (kW)		5.57 (1.94)			
Heating capacity (kW)		6.21 (2.04)			
Capacity equivalent to the indoor unit		P32			
Humidifier	Humidifying	–			
	Humidifying capacity (kg/h)	–			
	Water supply pressure	–			
Noise (dB) (Measured at 1.5m under the center of the unit in an anechoic chamber)		33.5-34.5	29.5-30.5	35-36	29.5-30.5
Weight (kg)		48			

Characteristic Curves

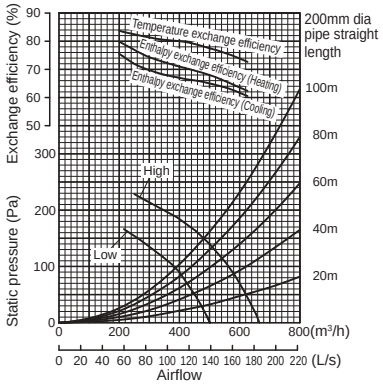

Dimensions

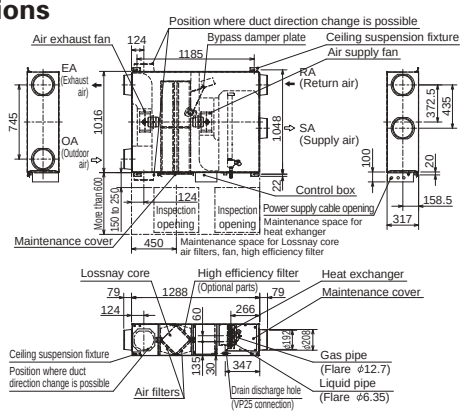

Unit: mm

GUF-100RD4

Electrical power supply		220-240V/50Hz			
Ventilation mode		Heat recovery mode		Bypass mode	
Fan speed		High	Low	High	Low
Running current (A)		2.20	1.73	2.25	1.77
Input power (W)		480-505	370-395	490-515	385-410
Airflow	(m^3/h)	1000	800	1000	800
	(L/s)	278	222	278	222
External static pressure (Pa)		140	90	140	90
Temperature exchange efficiency (%)		79.5	81.5	–	–
Enthalpy exchange efficiency (%)	Heating	71	74	–	–
	Cooling	69	71	–	–
Cooling capacity (kW)		11.44 (4.12)			
Heating capacity (kW)		12.56 (4.26)			
Capacity equivalent to the indoor unit		P63			
Humidifier	Humidifying	–			
	Humidifying capacity (kg/h)	–			
	Water supply pressure	–			
Noise (dB) (Measured at 1.5m under the center of the unit in an anechoic chamber)		38-39	34-35	38-39	35-36
Weight (kg)		82			

Characteristic Curves

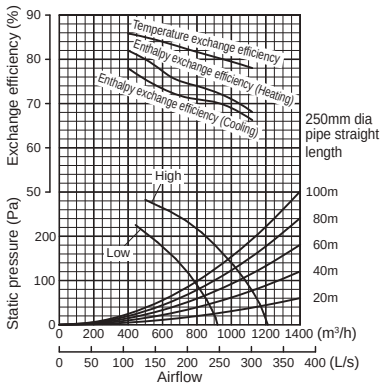

Dimensions

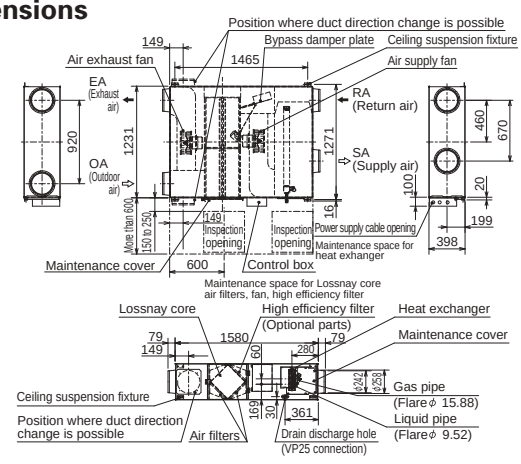

Unit: mm

■For GUF series
*Cooling/Heating capacity indicates the maximum value at operation under the following condition.
Cooling: Indoor: 27°C DB/19°C WB Outdoor: 35°C DB/24°C WB
Heating: Indoor: 20°C DB/13.8°C WB Outdoor: 7°C DB/6°C WB
*The figures in ( ) indicates heat recoverying capacity of heat exchange core.
*Figures in the chart are measured according to Japan Industrial Standard (JIS B 8628). Characteristic Curves are measured by chamber method.

GUF-50RDH4

Electrical power supply		220-240V/50Hz			
Ventilation mode		Heat recovery mode		Bypass mode	
Fan speed		High	Low	High	Low
Running current (A)		1.15	0.70	1.15	0.70
Input power (W)		235-265	150-165	235-265	150-165
Airflow	(m^3/h)	500	400	500	400
	(L/s)	139	111	139	111
External static pressure (Pa)		125	80	125	80
Temperature exchange efficiency (%)		77.5	80	–	–
Enthalpy exchange efficiency (%)	Heating	68	71	–	–
	Cooling	65	67	–	–
Cooling capacity (kW)		5.57 (1.94)			
Heating capacity (kW)		6.21 (2.04)			
Capacity equivalent to the indoor unit		P32			
Humidifier	Humidifying	Permeable film humidifier			
	Humidifying capacity (kg/h)	2.7 (heating)			
	Water supply pressure	Minimum pressure : 2.0 × 10^4Pa Maximum pressure : 49.0 × 10^4Pa			
Noise (dB) (Measured at 1.5m under the center of the unit in an anechoic chamber)		33.5-34.5	29.5-30.5	35-36	29.5-30.5
Weight (kg)		51 (filled with water 55)			

Characteristic Curves

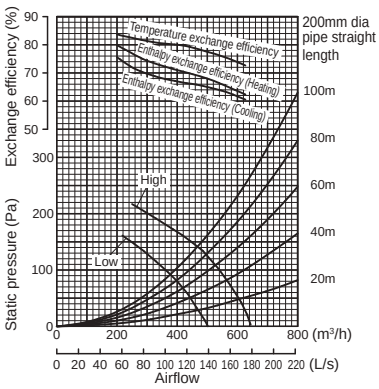

Dimensions

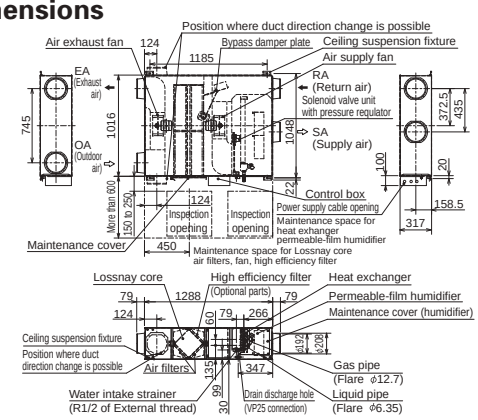

Unit: mm

GUF-100RDH4

Electrical power supply		220-240V/50Hz			
Ventilation mode		Heat recovery mode		Bypass mode	
Fan speed		High	Low	High	Low
Running current (A)		2.20	1.76	2.25	1.77
Input power (W)		480-505	385-400	490-515	385-410
Airflow	(m^3/h)	1000	800	1000	800
	(L/s)	278	222	278	222
External static pressure (Pa)		135	86	135	86
Temperature exchange efficiency (%)		79.5	81.5	–	–
Enthalpy exchange efficiency (%)	Heating	71	74	–	–
	Cooling	69	71	–	–
Cooling capacity (kW)		11.44 (4.12)			
Heating capacity (kW)		12.56 (4.26)			
Capacity equivalent to the indoor unit		P63			
Humidifier	Humidifying	Permeable film humidifier			
	Humidifying capacity (kg/h)	5.4 (heating)			
	Water supply pressure	Minimum pressure : 2.0 × 10^4Pa Maximum pressure : 49.0 × 10^4Pa			
Noise (dB) (Measured at 1.5m under the center of the unit in an anechoic chamber)		38-39	34-35	38-39	35-36
Weight (kg)		88 (filled with water 96)			

Characteristic Curves

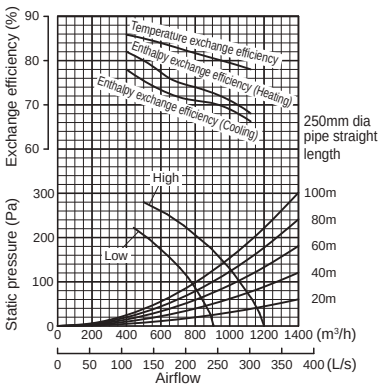

Dimensions

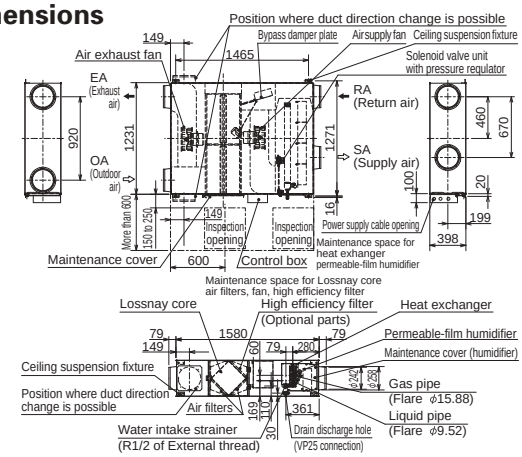

Unit: mm

■For GUF series
*Cooling/Heating capacity indicates the maximum value at operation under the following condition.
Cooling: Indoor: 27°C DB/19°C WB Outdoor: 35°C DB/24°C WB
Heating: Indoor: 20°C DB/13.8°C WB Outdoor: 7°C DB/6°C WB
*The figures in ( ) indicates heat recoverying capacity of heat exchange core.
*Figures in the chart are measured according to Japan Industrial Standard (JIS B 8628). Characteristic Curves are measured by chamber method.

Optimized System Integration

List of Remote Controller Settings and Functions

The remote controller provides a wide range of functions and features in addition to the main functions described below, such as sophisticated energy saving control and easy user interface.

Function (Communicating mode)	**PZ-61DR-E**	**PZ-43SMF-E**
Fan speed selection	4 fan speeds	2 of 4 fan speeds
Ventilation mode selection	Energy recovery / Bypass / Auto	Energy recovery / Bypass / Auto
Night-purge setting (time and fan speed)	Yes	No
Function setting from RC	Yes	No
Bypass temp. free setting	Yes	No
Heater-On temp. free setting	Yes	No
Fan power up after installation	Yes	No
0 - 10VDC external input	Yes	Yes
ON/OFF timer	Yes	Yes
Auto-Off timer	Yes	No
Weekly timer	Yes	No
Operation restrictions (ON/OFF, Ventilation mode, fan speed)	Yes	No
Operation restrictions (Fan speed skip setting)	Yes	No
Screen contrast adjustment	Yes	No
Language selection	Yes (8 languages)*	No (English only)
Initializing	Yes	No
Filter cleaning sign	Yes	Yes
Lossnay core cleaning sign	Yes	No
Error indication	Yes	Yes
Error history	Yes	No
OA/RA/SA temp. display	Yes	No

*The 8 languages are English, German, French, Spanish, Italian, Portuguese, Russian and Swedish.

Controllers

Lossnay Remote Controller (PZ-61DR-E)

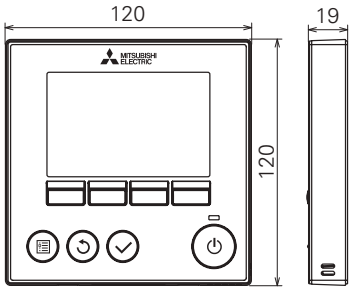

Unit: mm

Operation section

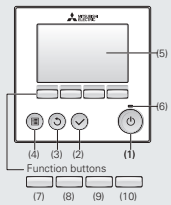

(1) Press to turn ON/OFF the Lossnay unit.
(2) Press to save the setting.
(3) Press to return to the previous screen.
(4) Press to bring up the Main menu.
(5) Operation settings will appear.
When the backlight is off, pressing any button turns the backlight on and it will stay lit for a certain period of time depending on the screen.
(6) This lamp lights up in green while the unit is in operation. It blinks while the remote controller is starting up or when there is an error.
(7) Main menu: Press to move the cursor down.
(8) Main display: Press to change the fan speed.
Main menu: Press to move the cursor up.
(9) Main display: Press to change the ventilation mode.
Main menu: Press to go to the previous page.
(10) Main menu: Press to go to the next page.

Display section

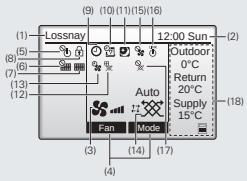

(1) Lossnay is always displayed.
(2) Current time appears here.
(3) Fan speed setting appears here.
(4) Functions of the corresponding buttons appear here.
(5) Appears when the ON/OFF operation is centrally controlled.
(6) Appears when the filter reset function is centrally controlled.
(7) Indicates when the filter and/or Lossnay core needs maintenance.
(8) Appears when the buttons are locked and/or a fan speed is skipped.
(9) Appears when the On/Off timer or Auto-off timer function is enabled.
(10) Appears when the Weekly timer is enabled.
(11) Appears when the night-purge function is available.
(12) Appears when performing operation to protect the equipment.
(13) Appears when performing the power supply/exhaust function or the delay operation at the start of operation.
(14) Indicates the ventilation mode setting.
(15) Appears when external fan speed operation.
(16) Appears when operation is interlocked with the external unit.
(17) Appears when external ventilation mode operation.
(18) Displays the outdoor temperature, return temperature, and supply temperature (calculated value).

Lossnay Remote Controller (PZ-43SMF-E)

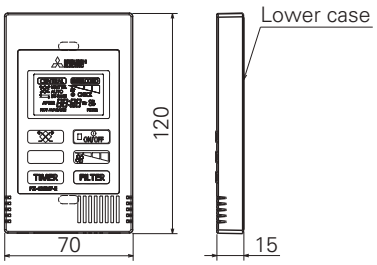

Unit: mm

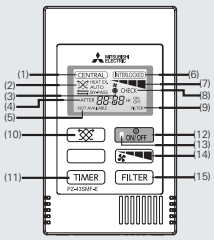

(1) Displayed during remote operation is prohibited by the centralized control unit, etc.
(2) Displays the ventilation mode status.

Heat exchange	HEAT EX.
By-pass	BY-PASS
Automatic (HEAT EX./BY-PASS)	HEAT EX. AUTO or AUTO BY-PASS

(3) Displayed while the Lossnay remote controller is powered on.
(4) Displays on-timer or off-timer duration.
(5) When a button is pressed for a function which the Lossnay unit cannot perform, this display flashes concurrently with the display of the function.
(6) Displayed when the Lossnay starts off by interlocked indoor unit or external signal.
(7) Displays the selected fan speed.
(8) Displayed together with the malfunctioning unit (3 digits) and an error code (4 digits).
(9) Displayed when the accumulated operating time reaches the time set for filter maintenance.
(10) Used to select the ventilation mode among heat exchange, by-pass or automatic.
(11) Increasing 0:30 by pressing it once. Keep pressing the button for fast-forwarding.
(12) Switch for start and stop.
(13) On during operation. Flashes when a malfunction occurs.
(14) Used to select the fan speed either "Low" or "High".

Low → High

(15) Press twice to reset the filter sign display.

Filters

Standard Filters

Replacements for the standard filter supplied with the Lossnay main unit.

Filter					Lossnay	
Filter Material	Classification		Model Name	Included piece/set	Applicable model	Required filter pieces
	ISO 16890	EN779 (2012)				
Non-woven Fabrics	Coarse 35%	G3*	PZ-15RF8-E	2	LGH-15RVX-E	2
			PZ-25RF8-E	4	LGH-25RVX-E	4
			PZ-35RF8-E	4	LGH-35RVX-E	4
			PZ-50RF8-E	4	LGH-50RVX-E, GUF-50RD4, GUF-50RDH4	4
			PZ-65RF8-E	4	LGH-65RVX-E	4
			PZ-80RF8-E	4	LGH-80RVX-E	4
					LGH-150RVX-E	8
			PZ-100RF8-E	4	LGH-100RVX-E, GUF-100RD4, GUF-100RDH4	4
					LGH-200RVX-E	8
	Coarse 50%	G3	PZ-150RTF-E	4	LGH-150RVXT-E	4
			PZ-250RTF-E	4	LGH-200RVXT-E, LGH-250RVXT-E	4

*The classification in EN779 (2002) is G3.

High-efficiency Filters Optional

These high-efficiency filters can be easily inserted in the Lossnay unit without the need to attach external parts.

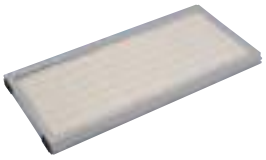

Filter					Lossnay	
Filter Material	Classification		Model Name	Included piece/set	Applicable model	Required filter pieces
	ISO 16890	EN779 (2012)				
Synthetic fiber	ePM10 75%	M6*	PZ-15RFM-E	1	LGH-15RVX-E	1
			PZ-25RFM-E	2	LGH-25RVX-E	2
			PZ-35RFM-E	2	LGH-35RVX-E	2
			PZ-50RFM-E	2	LGH-50RVX-E, GUF-50RD4, GUF-50RDH4	2
			PZ-65RFM-E	2	LGH-65RVX-E	2
			PZ-80RFM-E	2	LGH-80RVX-E	2
					LGH-150RVX-E	4
			PZ-100RFM-E	2	LGH-100RVX-E, GUF-100RD4, GUF-100RDH4	2
					LGH-200RVX-E	4

*The classification in EN779 (2002) is F7.

Advanced High-efficiency Filters (For LGH-RVX and GUF Series) Optional

These advanced high-efficiency filters are designed to remove approx. 99.7% of airborne particulates that are 0.5μm or larger.
*GB/T14295-2008 : YG class, 99.7% (Collecting efficiency for particles that are 0.5μm or larger)

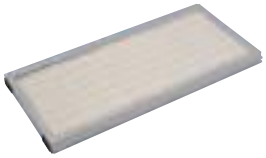

Filter					Lossnay	
Filter Material	Classification		Model Name	Included piece/set	Applicable model	Required filter pieces
	ISO 16890	ASHRAE 52.2 (2017)				
Synthetic fiber	ePM_1 75% $ePM_{2.5}$ 80% ePM_{10} 95%	MERV16	PZ-15RFP$_2$-E	1	LGH-15RVX-E	1
			PZ-25RFP$_2$-E	2	LGH-25RVX-E	2
			PZ-35RFP$_2$-E	2	LGH-35RVX-E	2
			PZ-50RFP$_2$-E	2	LGH-50RVX-E, GUF-50RD4, GUF-50RDH4	2
			PZ-65RFP$_2$-E	2	LGH-65RVX-E	2
			PZ-80RFP$_2$-E	2	LGH-80RVX-E	2
					LGH-150RVX-E	4
			PZ-100RFP$_2$-E	2	LGH-100RVX-E, GUF-100RD4, GUF-100RDH4	2
					LGH-200RVX-E	4

Advanced High-efficiency Filters (For LGH-RVXT Series) Optional

These advanced high-efficiency filters can be easily inserted in the Lossnay unit without the need to attach external parts.

Filter					Lossnay	
Filter Material	Classification		Model Name	Included piece/set	Applicable model	Required filter pieces
	ISO 16890	EN779 (2012)				
Non-woven Fabrics	ePM_{10} 75%	M6*	PZ-M6RTFM-E	3	LGH-150RVXT-E, LGH-200RVXT-E, LGH-250RVXT-E	3
	ePM_1 65% $ePM_{2.5}$ 75% ePM_{10} 90%	F8*	PZ-F8RTFM-E	3		

*There is no data for the classification in EN779 (2002).

Optional Dx-coil Unit for Lossnay

Supply Comfortable Control

Product Features

- Lossnay return air and supply air temperature control are possible by connecting the Dx-coil unit to Mr. Slim (power inverter series).
- Connecting the Dx-coil unit will expand Lossnay's temperature control range (500-2,500 CMH).
  Suitable for various applications such as offices, shops and schools etc.

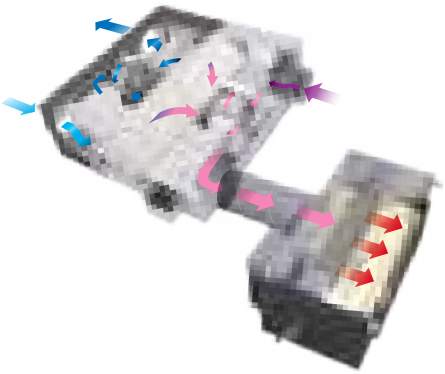

■ Target Applications

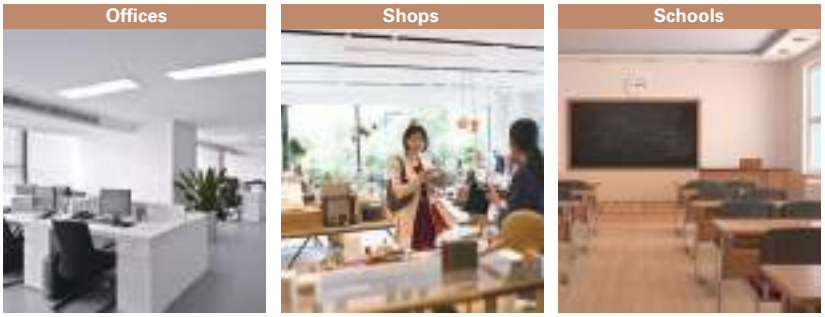

Application Examples

Supplemental Air-conditioning System (Return Air Temperature Control)

It may be possible to reduce one air-conditioning unit by adopting return air temperature control.

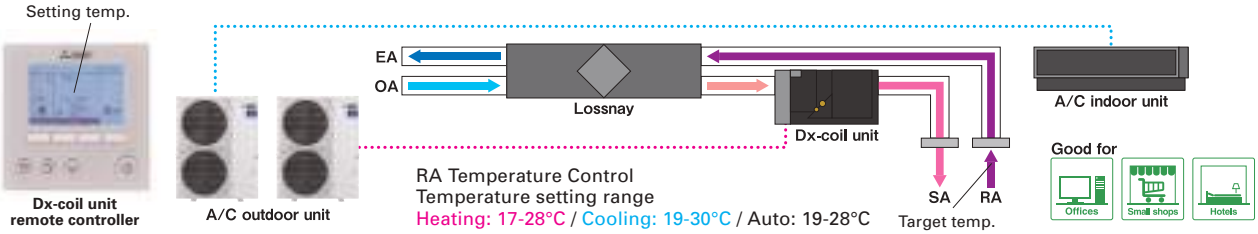

Main Air-conditioning System (Return Air Temperature Control)

Lossnay + Dx-coil unit may be used as the main air-conditioning system and a ventilation system for lower air-conditioning load applications.

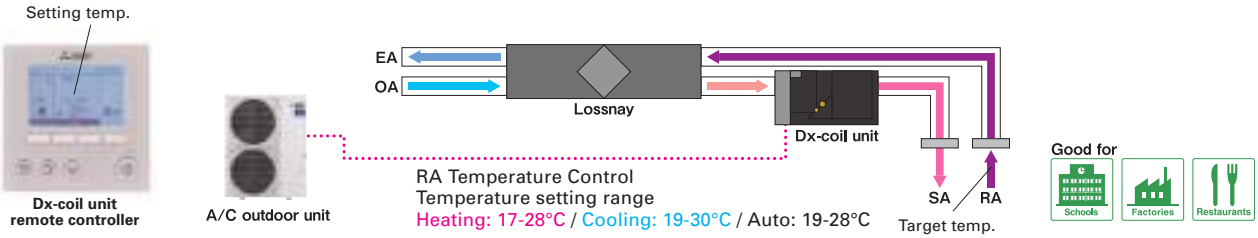

Outdoor Air Treatment System (Supply Air Temperature Control)

Controlling the temperature of outdoor air simplifies air-conditioning design and control.

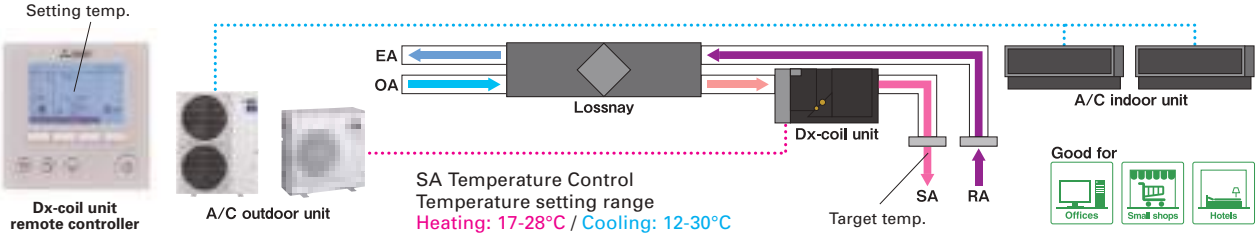

*The above images of using the LGH-RVXT Series are simply examples for reference.

Flexible Installation

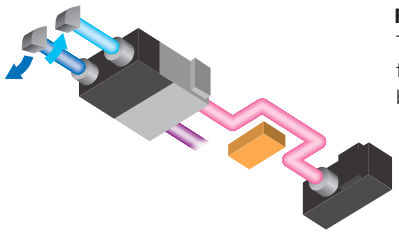

Flexible Connection to Lossnay

The length of the connection cable (accessory) between the Lossnay and Dx-coil unit is about 6m, so flexible installation is possible (two units can be installed close together or far apart with straight or bent ducting).

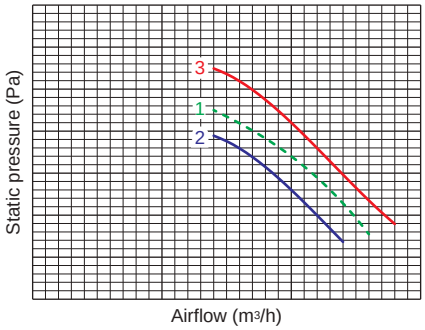

To Keep High Static Pressure

P-Q curve image

1. Lossnay unit
2. Lossnay unit + Dx-coil unit
3. Lossnay unit (fan power-up +4) + Dx-coil unit

Dx-coil unit static pressure loss is kept to a minimum, making it possible to maintain high static pressure using the fan power-up function of the Lossnay. The fan power-up function is only available when used with the PZ-61DR-E Lossnay remote controller.

Drain Pump Equipment

A built-in drain pump makes attaching the drain hose in the ceiling cavity easy, resulting in simple and fast installation.

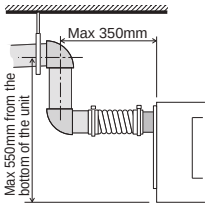

User-friendly System Control

Flexible Remote Controller Selection

(A) One remote controller

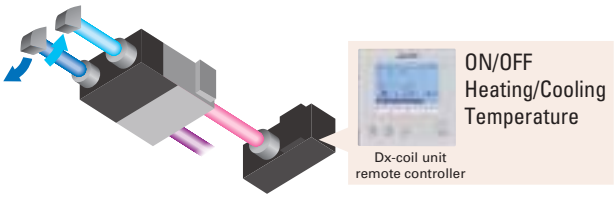

(B) Two remote controllers

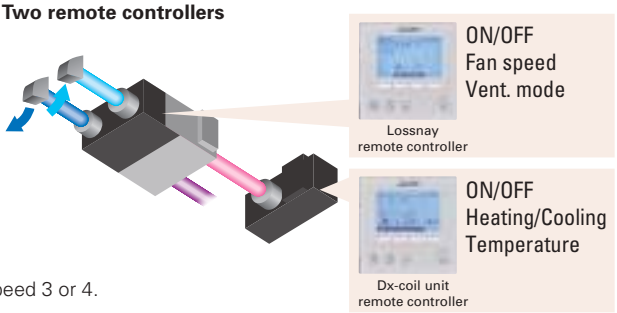

When using only one remote controller, Lossnay fan speed is fixed at fan speed 3 or 4.
When using two remote controllers, all Lossnay functions are available.
*1: Lossnay unit and Dx-coil unit both will synchronously switch on and off.
*2: When one of the two remote controllers is turned ON, the other remote controller turns ON synchronously.

Priority Mode Selection

Temperature priority mode (factory setting) or Fan speed priority mode are selectable when Lossnay unit fan speed is controlled by a CO_2-sensor or a BMS (analog input (0 - 10 VDC) or a volt-free input).

*During fan speed 1 or 2, the Dx-coil unit is always set to thermo-OFF

Operation mode	Fan speed order from external input	Actual fan speed	
		Temp. priority	Fan speed priority
Heating or Cooling	FS4	FS4	FS4
	FS3	FS3	FS3
	FS2	FS3	FS2
	FS1	FS3	FS1
Fan	FS4	FS4	FS4
	FS3	FS3	FS3
	FS2	FS2	FS2
	FS1	FS1	FS1

Specifications

GUG-01SL-E (Connection to LGH-50RVX-E or LGH-65RVX-E)

GUG-01SL-E

Refrigerant		R410A							
Electrical power supply		220-240V / 50Hz, 220V / 60Hz (Supplied from outdoor unit)							
Input power		Heating / Fan: 2.5W, Cooling: 12.4W							
Running current		Less than 0.1A							
Weight		21kg *Accessories: Approx. 1kg							
Function		Heating / Cooling / Auto / Fan *Auto is only available for RA temperature control							
		RA (Return Air) temperature control							
RA (Return Air) temperature control									
Connectable Lossnay unit		LGH-50RVX-E				LGH-65RVX-E			
Capacity [kW]	Heating	6.5 (2.4 + 4.1)				7.7 (3.2 + 4.5)			
	Cooling	5.6 (2.0 + 3.6)				6.6 (2.6 + 4.0)			
SHF		0.66				0.69			
Performance index	Heating	4.09				4.72			
	Cooling	4.69				5.03			
Airflow range at SP3 and SP4		350 - 695 m³/h				350 - 900 m³/h			
Connectable outdoor unit		PUHZ-ZRP35				PUHZ-ZRP35			
Ext. piping		Diameter Liquid / Gas: 6.35 / 12.7				Diameter Liquid / Gas: 6.35 / 12.7			
		Maximum length: 50m, Maximum height: 30m				Maximum length: 50m, Maximum height: 30m			
Ventilation specifications									
Fan speed		SP4	SP3	SP2	SP1	SP4	SP3	SP2	SP1
Airflow	[m³/h]	500	375	250	125	650	488	325	163
	[L/s]	139	104	69	35	181	135	90	45
External static pressure [Pa]		105	59	26	7	95	53	24	6

Characteristic Curves

LGH-50RVX-E

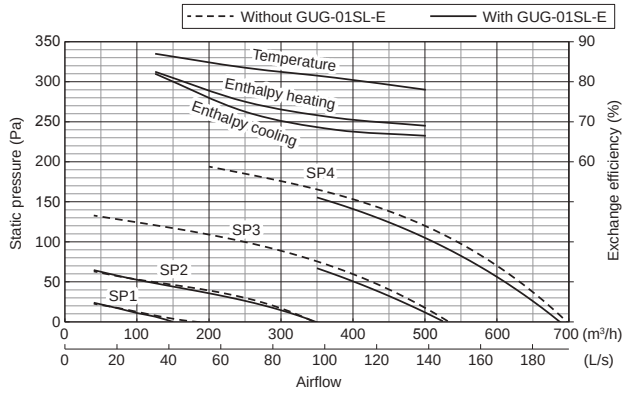

LGH-65RVX-E

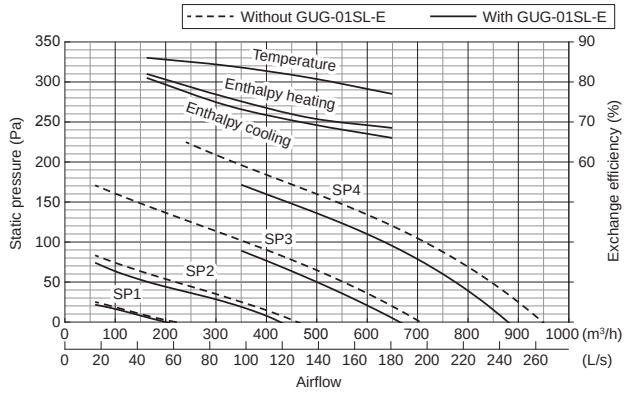

Dimensions

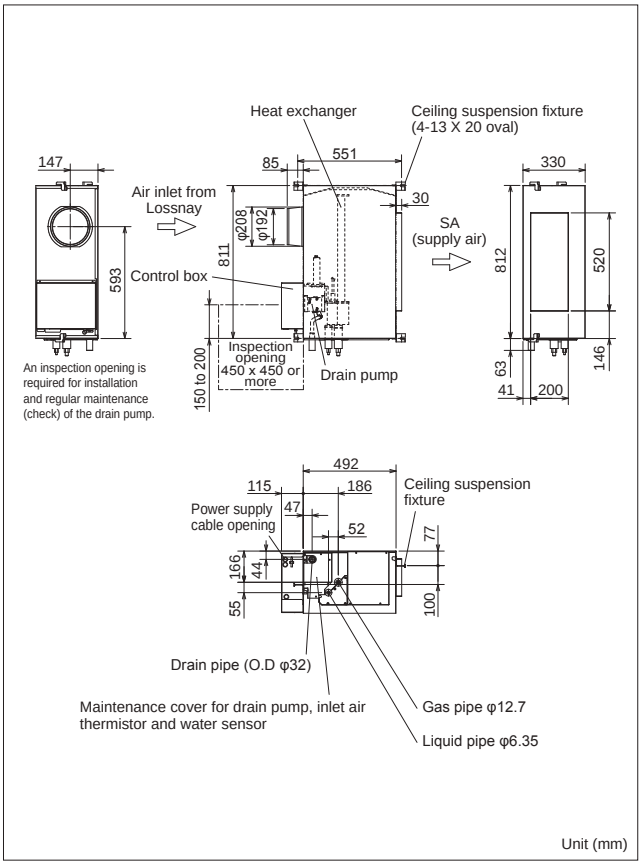

GUG-02SL-E (Connection to LGH-80RVX-E or LGH-100RVX-E)

GUG-02SL-E

Refrigerant		R410A							
Electrical power supply		220-240V / 50Hz, 220V / 60Hz (Supplied from outdoor unit)							
Input power		Heating / Fan: 2.5W, Cooling: 12.4W							
Running current		Less than 0.1A							
Weight		26kg *Accessories: Approx. 1kg							
Function		Heating / Cooling / Auto / Fan *Auto is only available for RA temperature control							
		RA (Return Air) temperature control / SA (Supply Air) temperature control [Must be set at initial setting and not possible to change from remote controller]							
RA (Return Air) temperature control									
Connectable Lossnay unit		LGH-80RVX-E				LGH-100RVX-E			
Capacity [kW]	Heating	10.0 (4.0 + 6.0)				13.2 (5.1 + 8.1)			
	Cooling	8.3 (3.3 + 5.0)				11.3 (4.2 + 7.1)			
SHF		0.69				0.66			
Performance index	Heating	4.62				4.42			
	Cooling	4.76				4.98			
Airflow range at SP3 and SP4		560 - 1200 m^3/h				700 - 1200 m^3/h			
Connectable outdoor unit		PUHZ-ZRP50				PUHZ-ZRP71			
Ext. piping		Diameter Liquid / Gas: 6.35 / 12.7				Diameter Liquid / Gas: 9.52 / 15.88			
		Maximum length: 50m, Maximum height: 30m				Maximum length: 50m, Maximum height: 30m			
Required optional parts		PAC-SH30RJ-E and PAC-SH50RJ-E				-			
SA (Supply Air) temperature control									
Connectable Lossnay unit		LGH-80RVX-E				LGH-100RVX-E			
Capacity [kW]	Heating	10.0 (4.0 + 6.0)				11.4 (5.1 + 6.3)			
	Cooling	8.3 (3.3 + 5.0)				9.5 (4.2 + 5.3)			
SHF		0.69				0.73			
Performance index	Heating	4.62				5.09			
	Cooling	4.76				5.43			
Airflow range at SP3 and SP4		560 - 1200 m^3/h				700 - 1200 m^3/h			
Connectable outdoor unit		PUHZ-ZRP50				PUHZ-ZRP50			
Ext. piping		Diameter Liquid / Gas: 6.35 / 12.7				Diameter Liquid / Gas: 6.35 / 12.7			
		Maximum length: 50m, Maximum height: 30m				Maximum length: 50m, Maximum height: 30m			
Required optional parts		PAC-SH30RJ-E and PAC-SH50RJ-E				PAC-SH30RJ-E and PAC-SH50RJ-E			
Ventilation specifications									
Connectable Lossnay unit		LGH-80RVX-E				LGH-100RVX-E			
Fan speed		SP4	SP3	SP2	SP1	SP4	SP3	SP2	SP1
Airflow	[m^3/h]	800	600	400	200	1,000	750	500	250
	[L/s]	222	167	111	56	278	208	139	69
External static pressure [Pa]		130	73	33	8	130	73	33	8

Characteristic Curves

LGH-80RVX-E

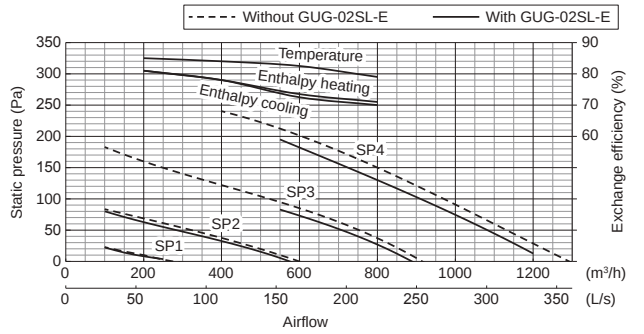

LGH-100RVX-E

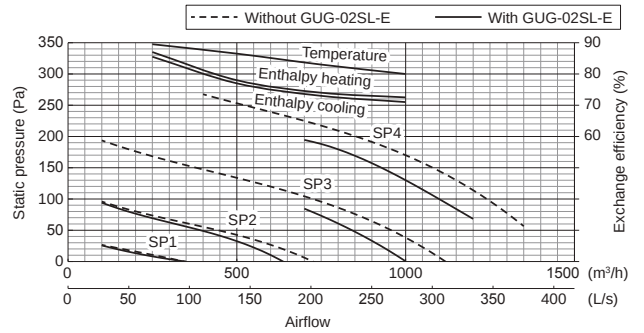

Dimensions

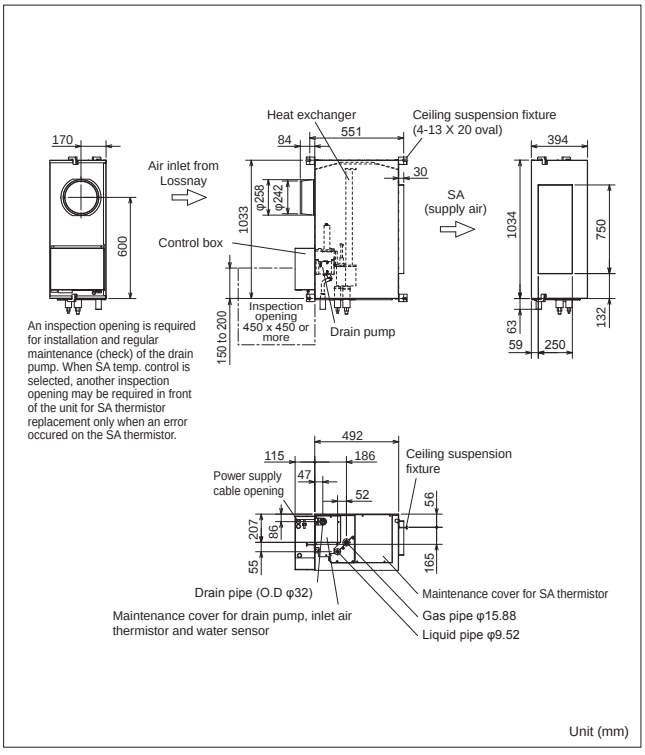

Specifications

GUG-03SL-E (Connection to LGH-150RVX-E or LGH-200RVX-E)

GUG-03SL-E

Refrigerant		R410A							
Electrical power supply		220-240V / 50Hz, 220V / 60Hz (Supplied from outdoor unit)							
Input power		Heating / Fan: 2.5W, Cooling: 12.4W							
Running current		Less than 0.1A							
Weight		28kg *Accessories: Approx. 1kg							
Function		Heating / Cooling / Auto / Fan *Auto is only available for RA temperature control							
		RA (Return Air) temperature control / SA (Supply Air) temperature control [Must be set at initial setting and not possible to change from remote controller]							
RA (Return Air) temperature control									
Connectable Lossnay unit		LGH-150RVX-E				LGH-200RVX-E			
Capacity [kW]	Heating	20.7 (7.7 + 13.0)				23.8 (10.3 + 13.5)			
	Cooling	15.8 (6.3 + 9.5)				18.4 (8.4 + 10.0)			
SHF		0.68				0.76			
Performance index	Heating	4.24				5.02			
	Cooling	5.27				5.86			
Airflow range at SP3 and SP4		1050 - 2250 m^3/h				1050 - 2600 m^3/h			
Connectable outdoor unit		PUHZ-ZRP100				PUHZ-ZRP100			
Ext. piping		Diameter Liquid / Gas: 9.52 / 15.88				Diameter Liquid / Gas: 9.52 / 15.88			
		Maximum length: 75m, Maximum height: 30m				Maximum length: 75m, Maximum height: 30m			
SA (Supply Air) temperature control									
Connectable Lossnay unit		LGH-150RVX-E				LGH-200RVX-E			
Capacity [kW]	Heating	16.6 (7.7 + 8.9)				19.5 (10.3 + 9.2)			
	Cooling	13.4 (6.3 + 7.1)				15.9 (8.5 + 7.4)			
SHF		0.85				0.90			
Performance index	Heating	5.46				6.30			
	Cooling	5.32				5.85			
Airflow range at SP3 and SP4		1050 - 2250 m^3/h				1050 - 2600 m^3/h			
Connectable outdoor unit		PUHZ-ZRP71				PUHZ-ZRP71			
Ext. piping		Diameter Liquid / Gas: 9.52 / 15.88				Diameter Liquid / Gas: 9.52 / 15.88			
		Maximum length: 50m, Maximum height: 30m				Maximum length: 50m, Maximum height: 30m			
Ventilation specifications									
Connectable Lossnay unit		LGH-150RVX-E				LGH-200RVX-E			
Fan speed		SP4	SP3	SP2	SP1	SP4	SP3	SP2	SP1
Airflow	[m^3/h]	1,500	1,125	750	375	2,000	1,500	1,000	500
	[L/s]	417	313	208	104	556	417	278	139
External static pressure [Pa]		150	84	38	9	105	59	26	7

Characteristic Curves

LGH-150RVX-E

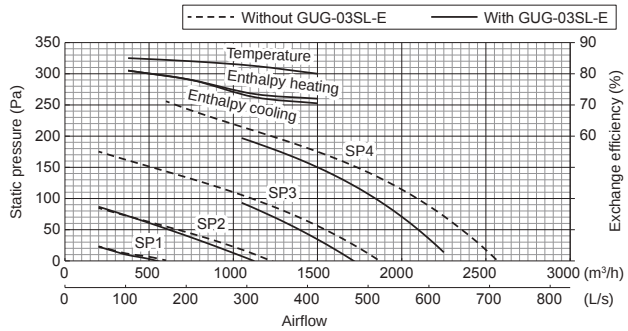

LGH-200RVX-E

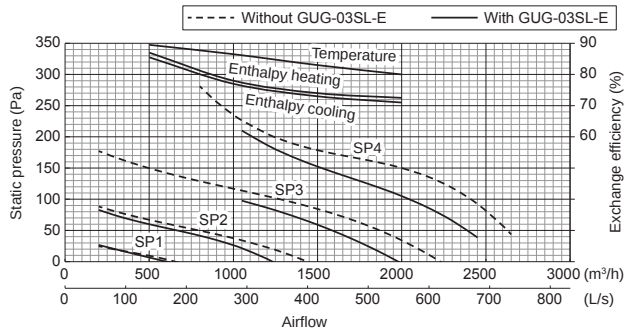

Dimensions

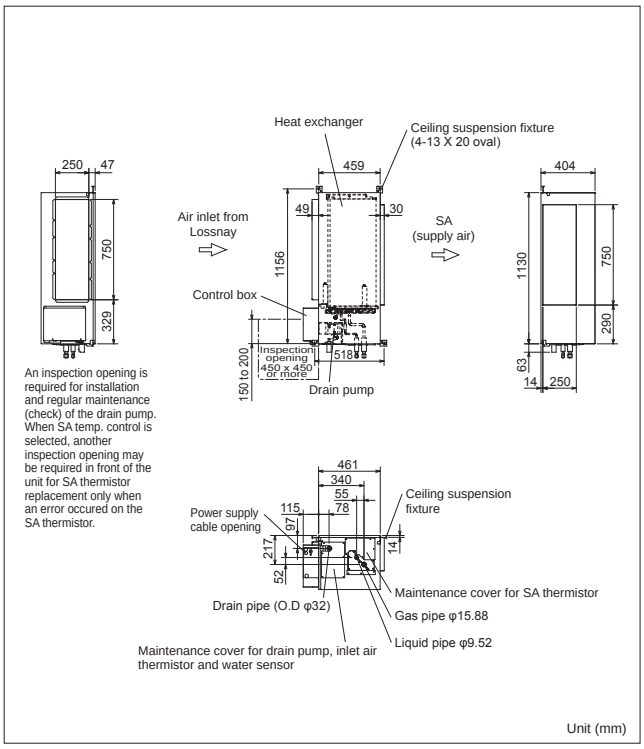

GUG-03SL-E (Connection to LGH-150RVXT-E, LGH-200RVXT-E or LGH-250RVXT-E)

Refrigerant		R410A		
Electrical power supply		220-240V / 50Hz, 220V / 60Hz (Supplied from outdoor unit)		
Input power		Heating / Fan: 2.5W, Cooling: 12.4W		
Running current		Less than 0.1A		
Weight		28kg *Accessories: Approx. 1kg		
Function		Heating / Cooling / Auto / Fan *Auto is only available for RA temperature control		
		RA (Return Air) temperature control / SA (Supply Air) temperature control [Must be set at initial setting and not possible to change from remote controller]		
RA (Return Air) temperature control				
Connectable Lossnay unit		LGH-150RVXT-E	LGH-200RVXT-E	LGH-250RVXT-E
Capacity [kW]	Heating	20.4 (7.4 + 13.0)	23.8 (10.3 + 13.5)	26.1 (12.1 + 14.0)
	Cooling	15.7 (6.2 + 9.5)	18.4 (8.4 + 10.0)	22.3 (9.8 + 12.5)
SHF		0.68	0.76	0.87
Performance index	Heating	4.07	4.86	4.75
	Cooling	5.03	5.59	4.59
Airflow range at SP3 and SP4		1050 - 2250 m^3/h	1050 - 2600 m^3/h	1750 - 2880 m^3/h
Connectable outdoor unit		PUHZ-ZRP100	PUHZ-ZRP100	PUHZ-ZRP125
Ext. piping		Diameter Liquid / Gas: 9.52 / 15.88	Diameter Liquid / Gas: 9.52 / 15.88	Diameter Liquid / Gas: 9.52 / 15.88
		Maximum length: 75m, Maximum height: 30m	Maximum length: 75m, Maximum height: 30m	Maximum length: 75m, Maximum height: 30m
SA (Supply Air) temperature control				
Connectable Lossnay unit		LGH-150RVXT-E	LGH-200RVXT-E	LGH-250RVXT-E
Capacity [kW]	Heating	16.3 (7.4 + 8.9)	19.5 (10.3 + 9.2)	21.6 (12.1 + 9.5)
	Cooling	13.3 (6.2 + 7.1)	15.9 (8.5 + 7.4)	17.6 (9.8 + 7.8)
SHF		0.86	0.90	0.95
Performance index	Heating	5.16	6.01	5.97
	Cooling	5.03	5.54	5.31
Airflow range at SP3 and SP4		1050 - 2250 m^3/h	1050 - 2600 m^3/h	1000 - 2600 m^3/h
Connectable outdoor unit		PUHZ-ZRP71	PUHZ-ZRP71	PUHZ-ZRP71
Ext. piping		Diameter Liquid / Gas: 9.52 / 15.88	Diameter Liquid / Gas: 9.52 / 15.88	Diameter Liquid / Gas: 9.52 / 15.88
		Maximum length: 50m, Maximum height: 30m	Maximum length: 50m, Maximum height: 30m	Maximum length: 50m, Maximum height: 30m

Ventilation specifications												
Connectable Lossnay unit		LGH-150RVXT-E				LGH-200RVXT-E				LGH-250RVXT-E			
Fan speed		SP4	SP3	SP2	SP1	SP4	SP3	SP2	SP1	SP4	SP3	SP2	SP1
Airflow	[m^3/h]	1,500	1,125	750	375	2,000	1,500	1,000	500	2,500	1,875	1,250	625
	[L/s]	417	313	208	104	556	417	278	139	694	521	347	174
External static pressure [Pa]		150	84	38	9	145	82	36	9	140	79	35	9

Characteristic Curves

Note The graphs below show the supply air only.

LGH-150RVXT-E

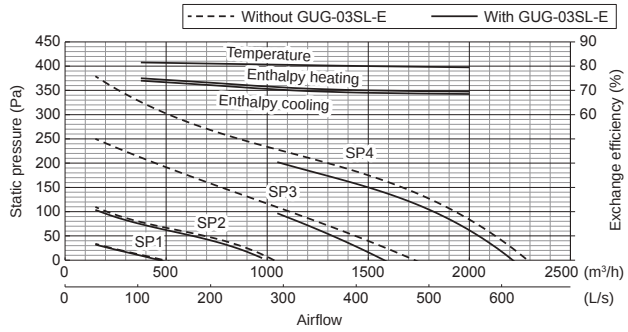

LGH-200RVXT-E

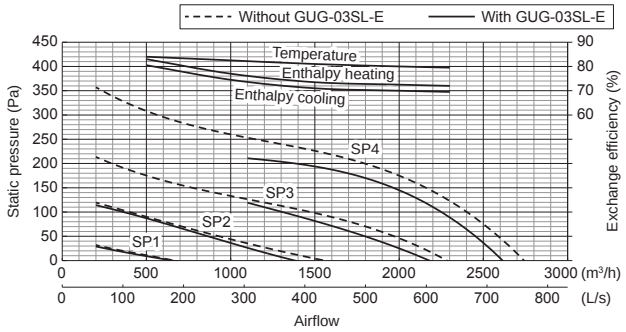

LGH-250RVXT-E

RA temperature control

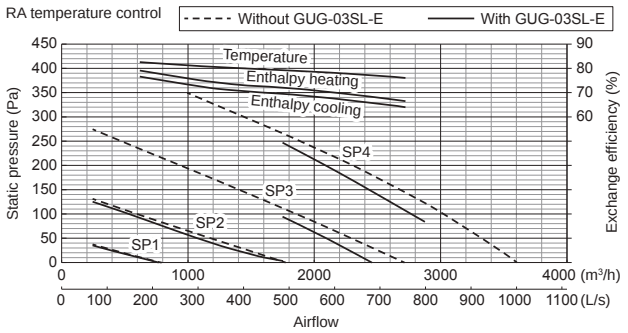

SA temperature control

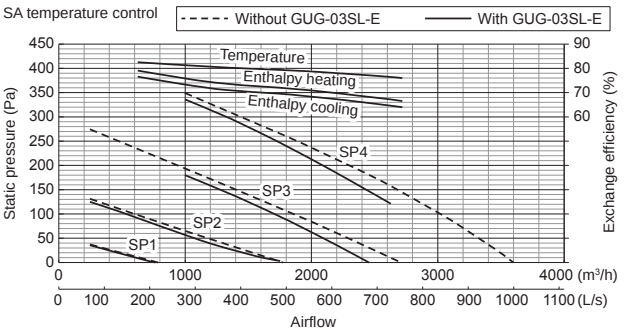

Attention

1. The running current and input power are based on 230V/50Hz.
2. The cooling and heating capacities are based on the air conditions listed below and the rated airflow of fan speed 4.
   Cooling Indoor: 27°CDB/19°CWB, Outdoor: 35°CDB/24°CWB
   Heating Indoor: 20°CDB/15°CWB, Outdoor: 7°CDB/6°CWB
3. The first figure in ( ) of the capacity specification is the heat recovery energy of the Lossnay unit. The second figure is the capacity specification for the Dx-coil connected to the outdoor unit.
4. "Performance index" is the calculated value at the temperature conditions above, and is for reference purpose only.
   Performance index = Total capacity ÷ total power consumption of outdoor unit and Lossnay unit
5. The external static pressure listed in the tables includes the static pressure loss of the Dx-coil unit when using a 50cm straight duct between the Lossnay and Dx-coil units. When the duct work between the Lossnay and Dx-coil units is longer and/or bent, the pressure loss of the duct work should be included in the pressure loss calculation.
6. The designed airflow of the system (Lossnay, Dx-coil and duct work) at fan speed 3 and 4 should be kept within "Airflow range at SP3 and SP4" listed in the tables. This range is shown as the solid line in graphs of the characteristic curves. If the Lossnay airflow is out of this range, the compressor of the outdoor unit may stop for self-protection purposes.
7. By installing the Dx-coil unit with a Lossnay unit, the air blow noise level is quieter at fan speed 4. Please refer to the "Direct Expansion coil unit for Lossnay" catalog.
8. Refrigerant leakage contributes to climate change. Refrigerant with lower global warming potential (GWP) would contribute less to global warming than a refrigerant with higher GWP, if leaked to the atmosphere. This appliance contains a refrigerant fluid with a GWP equal to 1975. This means that if 1kg of this refrigerant fluid would be leaked to the atmosphere, the impact on global warming would be 1975 times higher than 1kg of CO_2, over a period of 100 years. Never try to interfere with the refrigerant circuit or disassemble the product yourself and always ask a professional.

Duct Silencer

- This duct silencer connects to Lossnay unit to reduce the noise of its airflow.
- There are 4 sizes in order to cover a wide range of duct sizes.

Specifications

Model	Airflow [m³/h]	Attenuation of sound power level [dB] for center frequency (Discharge)							
		62.5Hz	125Hz	250Hz	500Hz	1000Hz	2000Hz	4000Hz	8000Hz
PZ-100SS-E	50	0	3	5	7	6	6	6	8
	150	0	3	6	7	7	7	7	9
PZ-150SS-E	250	0	1	5	8	15	21	20	14
	350	0	1	4	8	14	21	21	16
PZ-200SS-E	500	0	1	4	7	13	18	16	9
	650	0	1	3	8	12	17	14	6
PZ-250SS-E	800	0	2	4	12	22	21	14	13
	1000	0	1	4	12	22	20	14	13

Dimensions

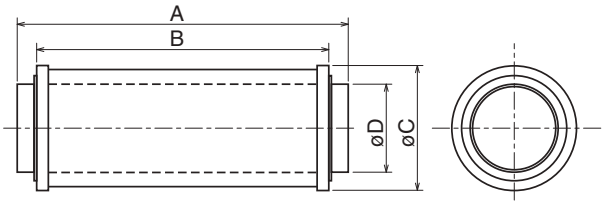

Unit: mm

Model	A	B	C	D	Connecting duct	Weight (kg)
PZ-100SS-E	450	400	152	99	ø100	1.9
PZ-150SS-E	560	500	202	149	ø150	3.5
PZ-200SS-E	660	600	252	199	ø200	5.3
PZ-250SS-E	660	600	332	249	ø250	8.9

Pressure loss curve

PZ-100SS-E

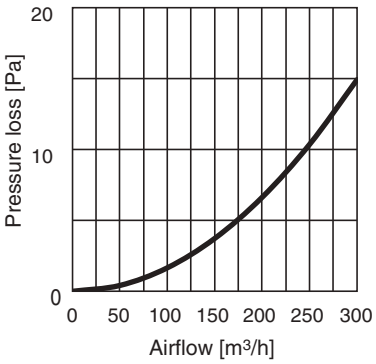

PZ-150SS-E

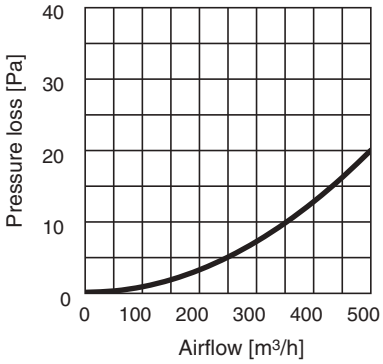

PZ-200SS-E

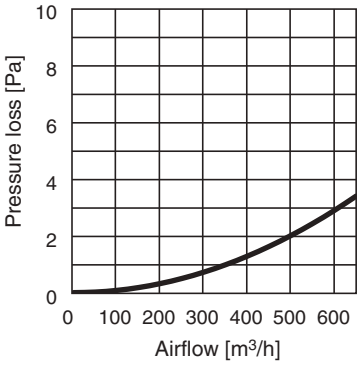

PZ-250SS-E

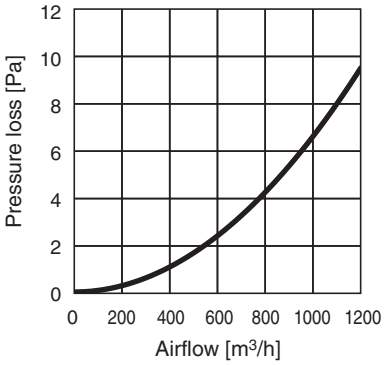

Optional Parts List

Optional Parts \ Lossnay		LGH-15RVX-E	LGH-25RVX-E	LGH-35RVX-E	LGH-50RVX-E	LGH-65RVX-E	LGH-80RVX-E	LGH-100RVX-E	LGH-150RVX-E	LGH-200RVX-E	LGH-150RVXT-E	LGH-200RVXT-E	LGH-250RVXT-E	GUF-50RD4	GUF-50RDH4	GUF-100RD4	GUF-100RDH4
Lossnay Remote Controller	PZ-61DR-E	●	●	●	●	●	●	●	●	●	●	●	●				
	PZ-43SMF-E	●	●	●	●	●	●	●	●	●	●	●	●				
Standard Filter	PZ-15RF8-E	●															
	PZ-25RF8-E		●														
	PZ-35RF8-E			●													
	PZ-50RF8-E				●									●	●		
	PZ-65RF8-E					●											
	PZ-80RF8-E						●		●								
	PZ-100RF8-E							●		●						●	●
	PZ-150RTF-E										●						
	PZ-250RTF-E											●	●				
High-efficiency Filters	PZ-15RFM-E	●															
	PZ-25RFM-E		●														
	PZ-35RFM-E			●													
	PZ-50RFM-E				●									●	●		
	PZ-65RFM-E					●											
	PZ-80RFM-E						●		●								
	PZ-100RFM-E							●		●						●	●
Advanced High-efficiency Filters	PZ-15RFP2-E	●															
	PZ-25RFP2-E		●														
	PZ-35RFP2-E			●													
	PZ-50RFP2-E				●									●	●		
	PZ-65RFP2-E					●											
	PZ-80RFP2-E						●		●								
	PZ-100RFP2-E							●		●						●	●
	PZ-M6RTFM-E										●	●	●				
	PZ-F8RTFM-E										●	●	●				
Duct Silencer	PZ-100SS-E	●															
	PZ-150SS-E		●	●													
	PZ-200SS-E				●	●								●	●		
	PZ-250SS-E						●	●								●	●
WiFi Interface	MAC-567IF-E	●	●	●	●	●	●	●	●	●	●	●	●				
Remote On/Off Adapter	PAC-SE55RA-E	●*1	●*1	●*1	●*1	●*1	●*1	●*1	●*1	●*1	●*1	●*1	●*1	●*1	●*1	●*1	●*1
Connector Cable for Remote Display	PAC-SA88HA-E	●*2	●*2	●*2	●*2	●*2	●*2	●*2	●*2	●*2	●*2	●*2	●*2	●*3	●*3	●*3	●*3

*1: PAC-SE55RA-E is used for CN32 of Lossnay unit.
*2: PAC-SA88HA-E is used for CN17 and CN26 of Lossnay unit.
*3: PAC-SA88HA-E is used for CN51 and CN52 of Lossnay unit.
Note: Please refer to each product page for required number of pieces/sets.

Residential Use Lossnay

Mitsubishi Electric offers you decentralized ventilation and centralized ventilation solutions for optimising your indoor air quality by Lossnay.

Centralized Ventilation Solution

One Lossnay unit provides 24-hour ventilation for the entire house, from living room and bedrooms to the bathroom. The heat recovery system provides fresh air at a comfortable air temperature. Sensible heat exchanger effectively reduces excess humidity in the winter.

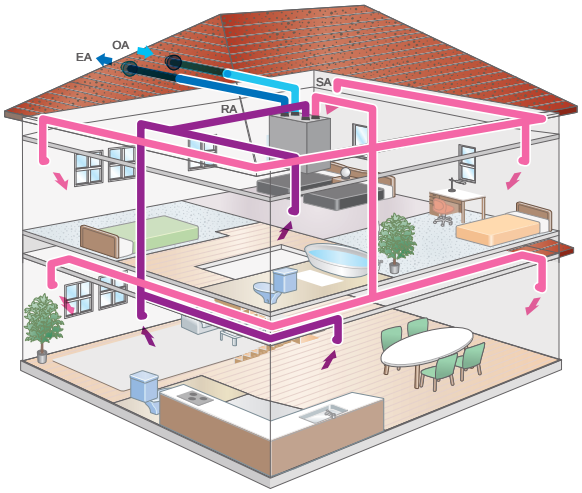

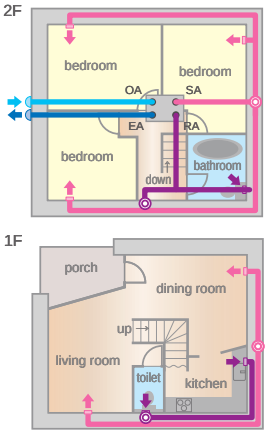

NEW

Model:
VL-250/350CZPVU-R/L-E

Decentralized Ventilation Solution

Install the wall-mounted Lossnay in each room.
The heat recovery system provides fresh air at a comfortable air temperature.
Total heat exchangers effectively reduce heat loss.

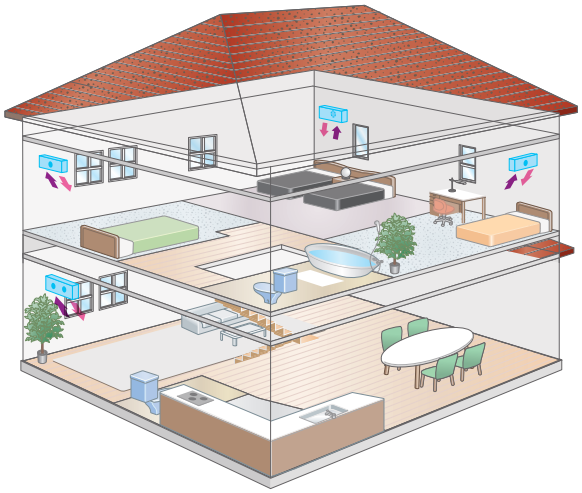

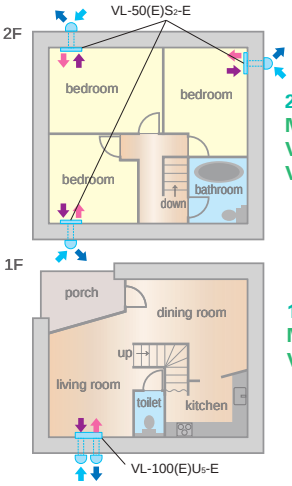

2F
Model:
VL-50(E)S_2-E
VL-50SR_2-E

1F
Model:
VL-100(E)U_5-E

VL-CZPVU SERIES NEW

VL-250CZPVU-R/L-E, VL-350CZPVU-R/L-E

Quiet Operation

Noise is one of the most common concern for residential ventilation. Ultra quiet operation is achieved with the sirocco fan designed by Mitsubishi Electric. The balance between airflow and the static pressure is optimized and the fan rotation is minimized, which leads to a low noise level.

Air Purification

The optional filter corresponding to NOx and PM2.5 removes the substance and improves the indoor air quality. They can be incorporated inside the unit without any filter box, which saves space.

*NOx: Nitrogen oxide which includes nitric oxide (NO) and nitrogen dioxide (NO_2) etc.
*PM2.5: Airborne particulates that are 2.5μm or smaller in size.

Wi-Fi Control

MELCloud is a Cloud-based solution for controlling Lossnay either locally or remotely by computer, tablet or smartphone via the Internet. You can control and check Lossnay via MELCloud from virtually anywhere an Internet connection is available. With MELCloud, you can use Lossnay much more easily and conveniently.

Key Features

Energy Efficient

Under regulation (EU) NO 1254 / 2014, VL-CZPVU series has the highest energy-saving performance in its class. (ErP A+) It saves heating and cooling cost by minimizing the energy loss that occurs during ventilation.

ErP A+ A+

Variable Airflow Control

The default fan speed value (Fan speed 1: 30%, Fan speed 2: 50%, Fan speed 3: 70%, and Fan speed 4: 100%) of both supply air and exhaust air can be adjusted more flexibly. Within the range between 25% and 100%, airflow can be adjusted by 1% to satisfactorily meet the designed airflow rate. This enables to simplify the airflow setting in commissioning.

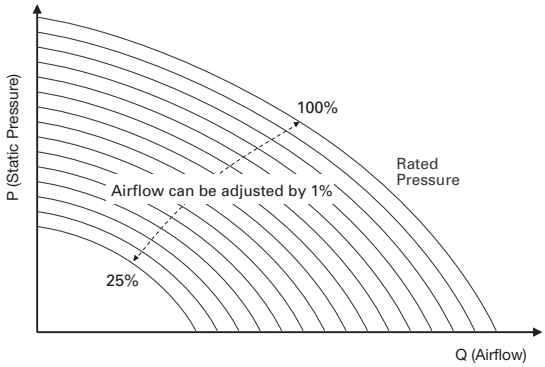

External Airflow Control

Using a 0-10V signal from the controllers such as the humidity stats and CO_2 sensors, the airflow of the Lossnay unit can be changed. It is also connected to the light switch and can change to the boost operation (Input 220-240V). They are connected directly to the Lossnay units allowing the fan speed to automatically change according to the bathroom occupation, the CO_2 level, and the humidity level.

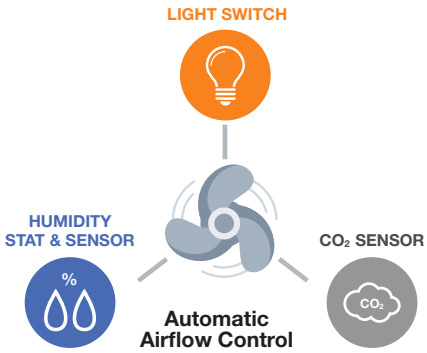

Automatic Bypass Mode

It is possible to select manual switching or automatic switching between "Lossnay ventilation (with heat exchange)" and "Bypass ventilation (without heat exchange)". When the outside air is cooler than the indoor air in summer, the unit will bypass the heat exchanger and draw in outside air directly.

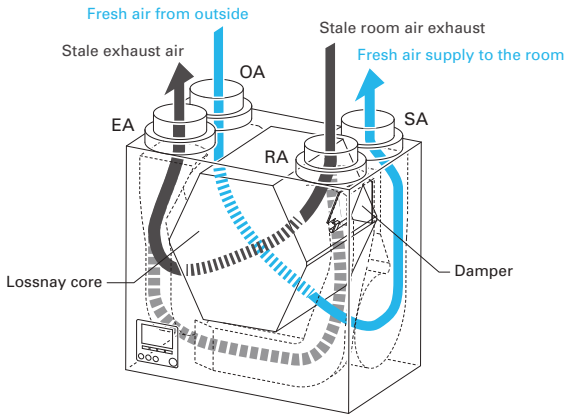

* The figure shows VL-350CZPVU-L-E

Wide Operating Temperature Range

The VL-CZPVU series operating temperature range is down to -15°C. With a pre-heater, it is available down to -25°C.

* In areas where the outdoor air is below -20˚C, electric shutters (local supply) is required in the OA duct in addition to the pre-heater.
* With the pre-heater, the OA temperature must be higher than -15˚C.

MELCloud for Lossnay

MELCloud enables fast, easy remote control and monitoring for Lossnay. All you need is wireless computer connectivity in your home where Lossnay is installed and Internet connection on your mobile or fixed terminal. It can also be controlled with room air conditioner/ecodan simultaneously.

Key Control and monitoring features

1. Turn system on/off
2. Change the airflow & operating mode (Heat recovery / Bypass)
3. See the status of the filter (Maintenance notification)

* MELCloud uses the MAC-567IF-E interface

New Ventilator Selection Software

The new selection tool enables the user to see the specification of the duty point including SFP, noise level, and exchange efficiency. It also provides the certification documents and CAD data for each models.

Easy 3 steps

1. Input the required airflow and pressure.
2. Select model which matches the request.
3. Output the "Fan Data Sheet" by PDF.

YouTube Channel

In the new YouTube channel "Mitsubishi Electric Nakatsugawa Works", videos about ventilation products, remote controller commissioning, how to use the software is available.

Residential Lossnay Specifications

VL-250CZPVU-R/L-E

Electrical Power Supply		220-240V/50Hz, 220V/60Hz			
Ventilation Mode		Heat recovery mode			
Fan speed		FS4 (100%)	FS3 (70%)	FS2 (50%)	FS1 (30%)
Running Current (A)		0.76	0.35	0.20	0.12
Input Power (W)		106	44	23	11
Airflow	(m^3/h)	250	175	125	75
	(l/s)	69	49	35	21
External Static Pressure (Pa)		150	74	38	14
Temperature Exchange Efficiency (%)		85	87	88	90
Noise Level (dB)		31	22	16	15>
Energy Efficiency Class		A+			
Weight (kg)		26			
Dimensions (mm)		(W) 595 x (D) 356 x (H) 565			

1. The above values are at factory default.
2. The running current, the input power, the efficiency and the noise are based on the rating air volume, and 230V/50Hz.
3. The sound pressure level at 3m is spherical.
4. Temperature exchange efficiency (%) is based on winter condition.
5. Mitsubishi Electric measures figures in the chart according to EN13141-7:2010, and the characteristic curves are measured by chamber method.

Characteristic Curves

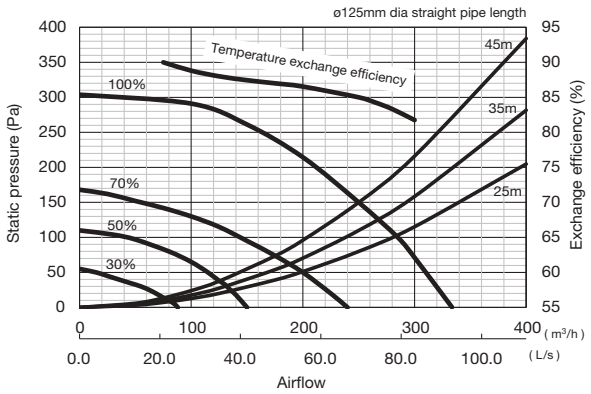

■ Attention
- Mitsubishi Electric measures figures in the chart according to EN13141-7:2010, and the characteristic curves are measured by chamber method.

Dimensions

Unit: mm

VL-250CZPVU-R-E

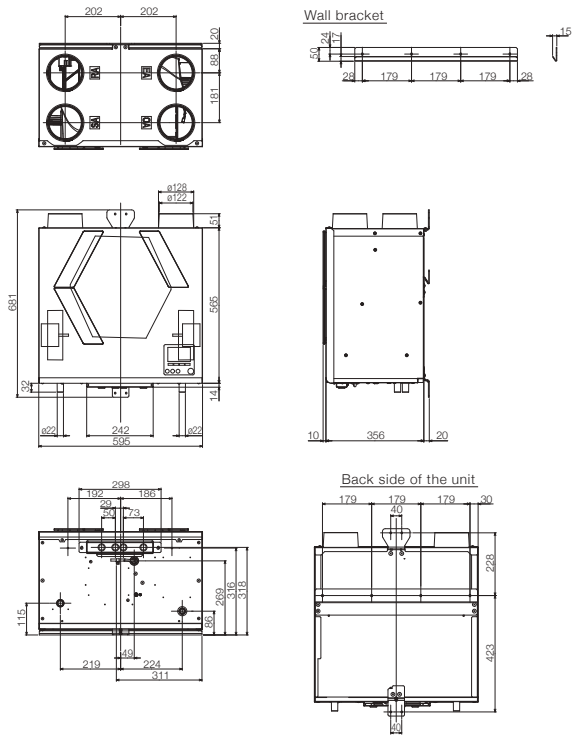

VL-250CZPVU-L-E

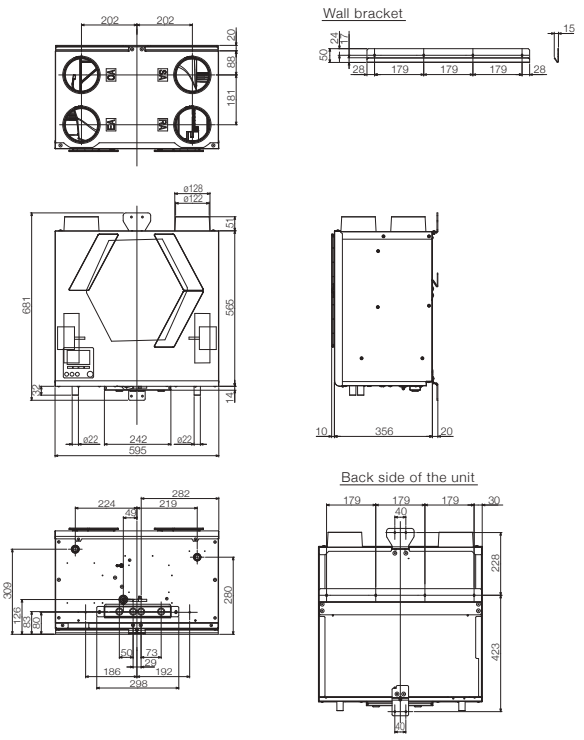

VL-350CZPVU-R/L-E

Electrical Power Supply		220-240V/50Hz, 220V/60Hz			
Ventilation Mode		Heat recovery mode			
Fan speed		FS4 (100%)	FS3 (70%)	FS2 (50%)	FS1 (30%)
Running Current (A)		1.08	0.52	0.31	0.18
Input Power (W)		155	71	37	19
Airflow	(m^3/h)	320	224	160	96
	(l/s)	89	62	44	27
External Static Pressure (Pa)		150	74	38	14
Temperature Exchange Efficiency (%)		85	87	88	90
Noise Level (dB)		35	26	19	15>
Energy Efficiency Class		A+			
Weight (kg)		32			
Dimensions (mm)		(W) 658 x (D) 432 x (H) 623			

1. The above values are at factory default.
2. The running current, the input power, the efficiency and the noise are based on the rating air volume, and 230V/50Hz.
3. The sound pressure level at 3m is spherical.
4. Temperature exchange efficiency (%) is based on winter condition.
5. Mitsubishi Electric measures figures in the chart according to EN13141-7:2010, and the characteristic curves are measured by chamber method.

Characteristic Curves

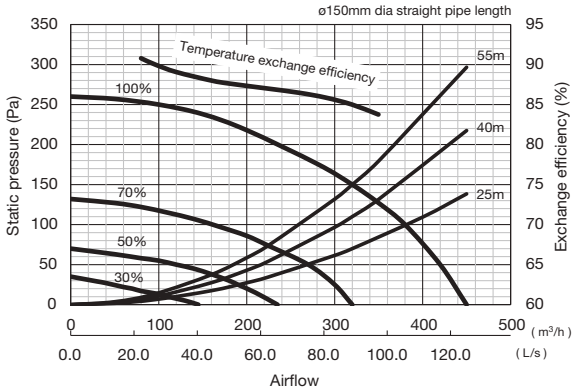

■ Attention
- Mitsubishi Electric measures figures in the chart according to EN13141-7:2010, and the characteristic curves are measured by chamber method.

Dimensions

Unit: mm

VL-350CZPVU-R-E

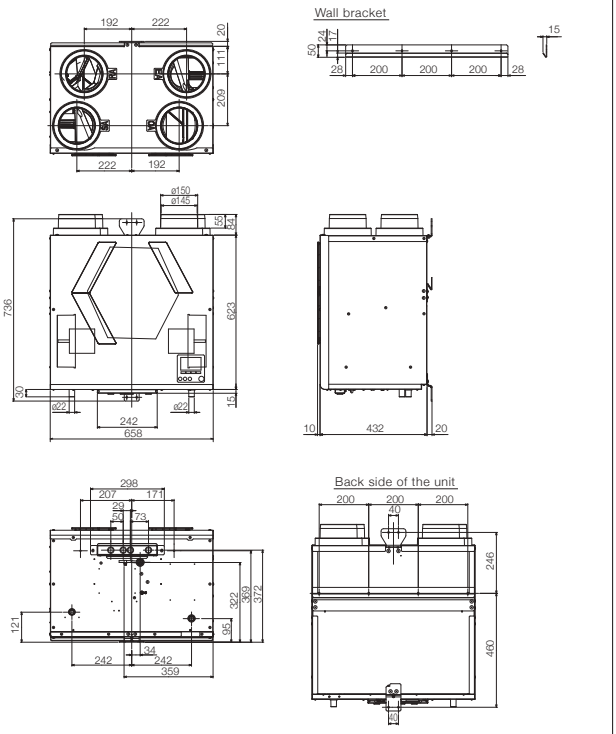

VL-350CZPVU-L-E

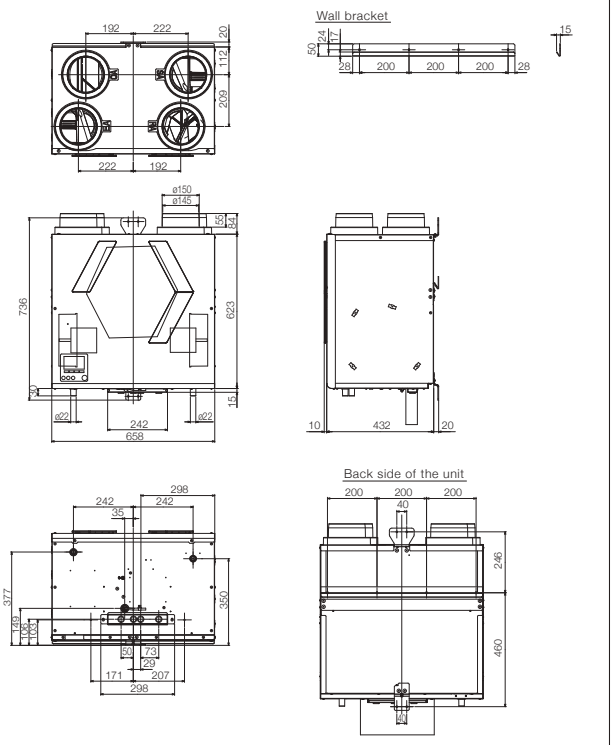

Filters

Type		Replacement Filter	Standard Filter	Medium Efficiency Filter	PM2.5 Filter	NOx Filter
Design						
Model		P-250F-E P-350F-E	P-250SF-E P-350SF-E	P-250MF-E P-350MF-E	P-250PF-E P-350PF-E	P-250NF-E P-350NF-E
Classification	EN779 (2012)	G3	G4	M6	M6	NO_2 90%
	ISO 16890	Coarse 55%	Coarse 90%	ePM10 80%	ePM2.5 50%	

Pressure loss characteristic

Model | P-250SF-E | P-350SF-E

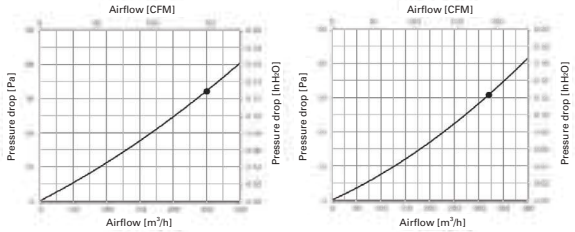

Model | P-250MF-E | P-350MF-E

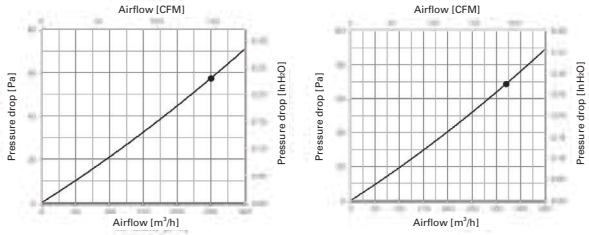

Model | P-250PF-E | P-350PF-E

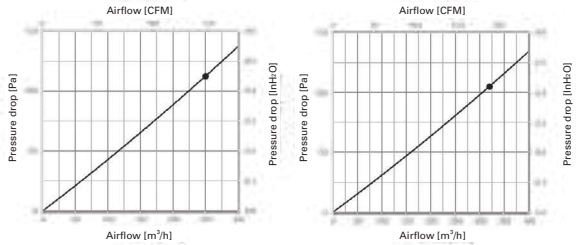

Model | P-250NF-E | P-350NF-E

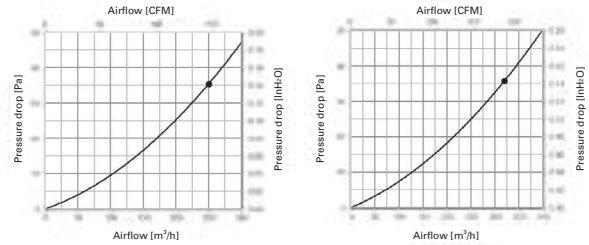

Remote Controller Cover

P-RCC-E

With Remote Controller Cover, the remote controller can be installed apart from the unit.

Model: VL-220CZGV-E

Model		VL-220CZGV-E			
Electrical power supply		220-240V/50Hz 220V/60Hz			
Ventilation mode		Heat recovery mode			
Fan speed		Fan speed 4	Fan speed 3	Fan speed 2	Fan speed 1
Running current		0.60	0.29	0.18	0.11
Input power (W)		80	35	18.5	8.5
Airflow	(m^3/h)	230	165	120	65
	(L/s)	64	46	33	18
External static pressure (Pa)		164	84	44	13
Temperature exchange efficiency (%)		82	84	85	86
Noise level (dB)		31	25	19	14
Weight (kg)		31			
Specific energy consumption class		A			

1. The running current, the input power, the efficiency and the noise are based on the rating air volume, and 230V/50Hz. The noise is measured at 1.5m under the center of the unit in an anechoic chamber.
2. Temperature exchange efficiency (%) is based on winter condition.
3. Mitsubishi Electric measures figures in the chart according to Japan Industrial Standard (JIS B 8628), therefore the characteristic curves are measured by chamber method.

Characteristic Curve

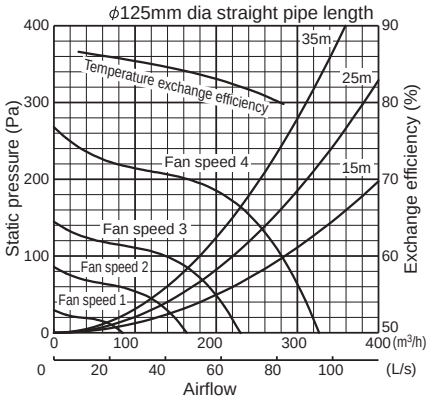

Dimensions

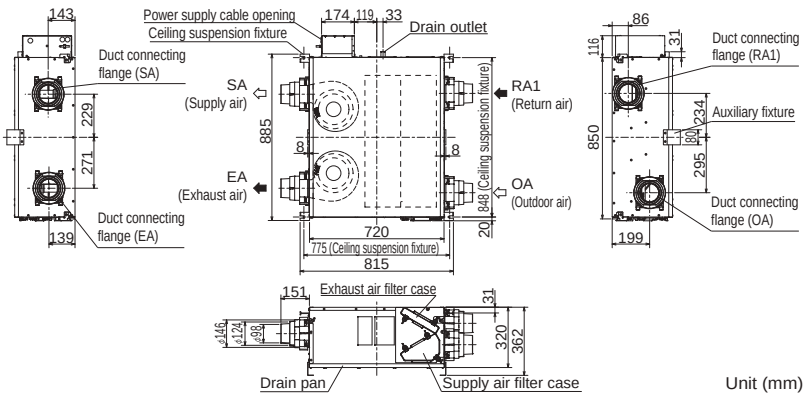

Optional Parts

Parts for VL-220CZGV-E

Bypass Damper
Model: P-133DUE-E

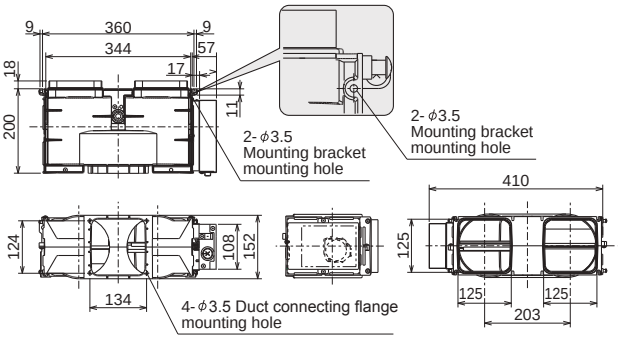

Filters

Type	Standard Replacement Filter	Medium Efficiency Exhaust Air Filter	High Efficiency Supply Air Filter
Design		Optional	Optional
Model	P-220F-E	P-220EMF-E	P-220SHF-E
Classification (EN779:2012)	G3	G4	M6
Classification (ISO16890)	Coarse 35%	ePM_{10} 50%	ePM_{10} 70%

Decentralized ventilation: VL-50(E)S2-E, VL-50SR2-E and VL-100(E)U5-E

Product Merit

Air supplied and Exhausted Simultaneously

Supply and exhaust air simultaneously while transferring the heat.

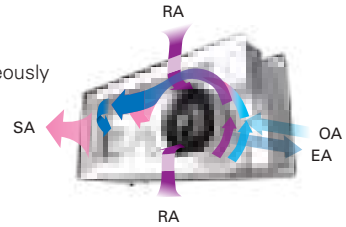

The low noise level is good for bedrooms and children's rooms.

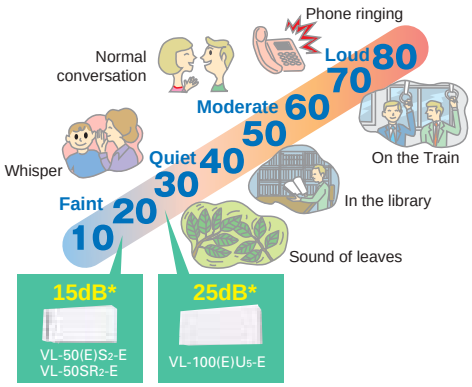

*Condition: 50Hz, 230V, low fan speed

Energy Efficient

- Total heat exchanger minimizes heat loss.
- Achieve over 80%* temperature efficiency.

*VL-100(E)U5-E at low fan speed in 230V 50Hz
*VL-50(E)S2-E at low fan speed in 230V 50Hz

Sound Insulation

A sound insulation effect reduces noise generated outside.

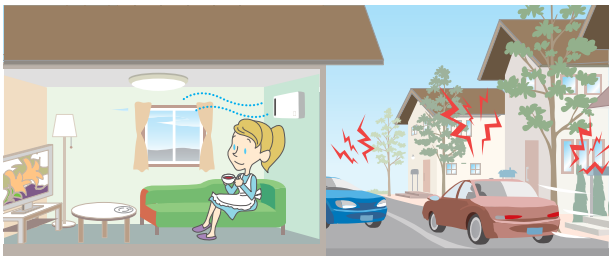

Sound Insulation Effect	Sound Source Side Average sound pressure dB	Sound Receiving Side Average sound pressure dB	Difference
	103.4	63.2	40.2

*Tested based on VL-08S2-AE
*Measured by average sound pressure level of more than 30dB in 500Hz according to JIS A1416.
VL-08S2-AE is a Japanese dedicated model equivalent to VL-50(E)S2-E

Product Features

Stylish Design

Match any interior decor to create a comfortable room.

VL-50(E)S2-E
VL-50SR2-E

VL-100(E)U5-E

Easy Maintenance

The only maintenance required is cleaning the outside-air filter and exhaust-air filter. Filters are easily accessible, making quick and thorough cleaning possible.

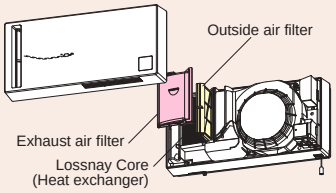

VL-50(E)S2-E
VL-50SR2-E

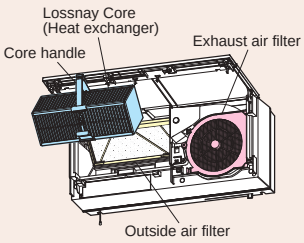

VL-100(E)U5-E

Flexible Installation for Only VL-50(E)S2-E and VL-50SR2-E

Not only horizontal installation but also vertical installation is available. It can fit various types of rooms with flexible installation.

Horizontal Installation	Vertical Installation Example

Residential Lossnay Specifications

Model: VL-50S2-E (Pull-Switch Model) and VL-50ES2-E (Wall-Switch Model)

Model	VL-50(E)S2-E							
Electrical power supply	220V/50Hz		230V/50Hz		240V/50Hz		220V/60Hz	
Fan speed	High	Low	High	Low	High	Low	High	Low
Airflow (m³/h)	51	15	52.5	16	54	17	54	17
Power consumption (W)	19	4	20	4.5	21	5	21	5.5
Temperature exchange efficiency (%)	70	86	69	85	68	84	68	84
Noise level (dB)	36.5	14	37	15	37.5	15.5	37.5	15.5
Weight (kg)	6.2							
Specific energy consumption class	C							

*Figures in the chart were measured according to Japan Industrial Standard (JIS B 8628) with the shutter knob in open position.

Dimensions

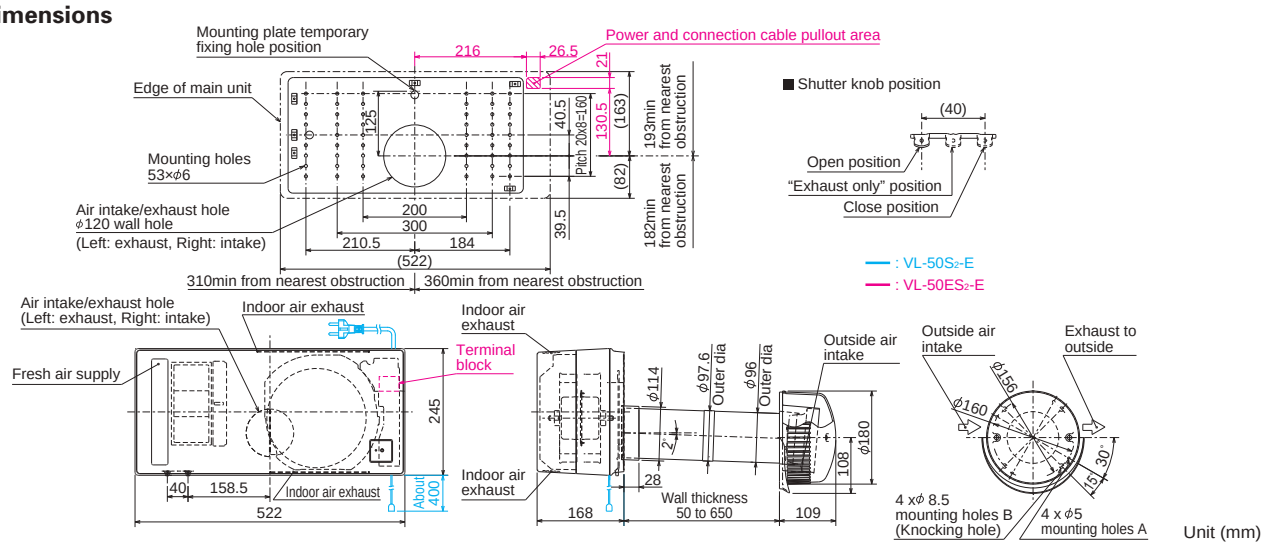

Model: VL-50SR2-E (Remote Controller Model)

Model	VL-50SR2-E							
Electrical power supply	220V/50Hz		230V/50Hz		240V/50Hz		220V/60Hz	
Fan speed	High	Low	High	Low	High	Low	High	Low
Airflow (m³/h)	51	15	52.5	16	54	17	54	17
Power consumption (W)	19	4.5	20	5	21	5.5	21	6
Temperature exchange efficiency (%)	70	86	69	85	68	84	68	84
Noise level (dB)	36.5	14	37	15	37.5	15.5	37.5	15.5
Weight (kg)	6.2							
Specific energy consumption class	C							

*Figures in the chart were measured according to Japan Industrial Standard (JIS B 8628) with the shutter knob in open position.

Dimensions

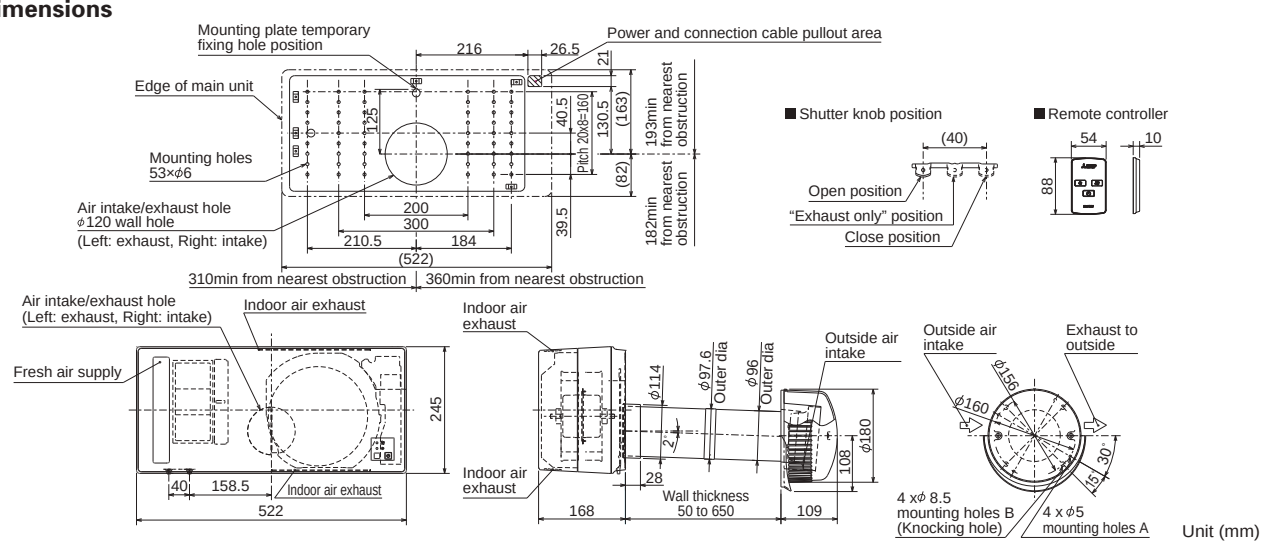

Model: VL-100U5-E (Pull-Switch Model) and VL-100EU5-E (Wall-Switch Model)

Model	VL-100(E)U5-E							
Electrical power supply	220V/50Hz		230V/50Hz		240V/50Hz		220V/60Hz	
Fan speed	High	Low	High	Low	High	Low	High	Low
Airflow (m^3/h)	100	55	105	60	106	61	103	57
Power consumption (W)	30	13	31	15	34	17	34	17
Temperature exchange efficiency (%)	73	80	73	80	72	79	73	80
Noise level (dB)	36.5	24	37	25	38	27	38	25
Weight (kg)	7.5							
Specific energy consumption class	B							

*Figures in the chart were measured according to Japan Industrial Standard (JIS B 8628) with the shutter knob in open position.

Dimensions

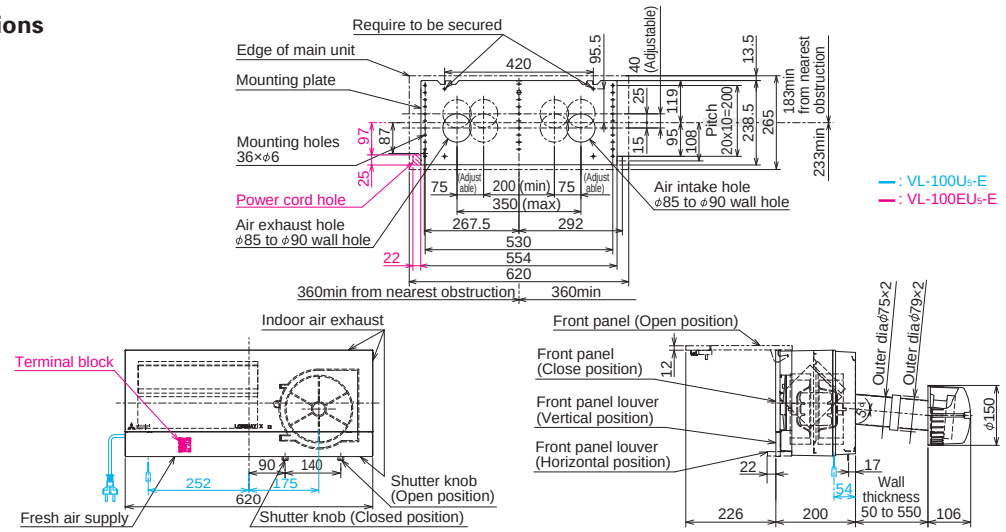

Unit (mm)

Optional Parts

Optional Parts for VL-50(E)S2-E and VL-50SR2-E

Filter, Extension Pipe and Stainless Hood

Type	Replacement Filter	High Efficiency Filter	Extension Pipe	Joint	Stainless Hood
Design					
Model	P-50F2-E	P-50HF2-E	P-50P-E	P-50PJ-E	P-50VSQ5-E
Feature	–	–	Total length when connected to the joint is 350mm.	Joint for extension pipe	Stylish stainless hood
Classification (EN779:2012)	G3	–	–	–	–
Classification (ISO16890)	Coarse 35%	ePM10 75%	–	–	–

Optional Parts for VL-100(E)U5-E

Filter and Extension Pipe

Type	Replacement Filter	High Efficiency Filter	Extension Pipe	Joint
Design		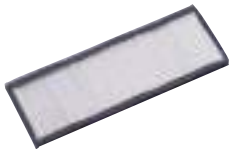		
Model	P-100F5-E	P-100HF5-E	P-100P-E	P-100PJ-E
Feature	–	–	Total length when connected to the joint is 300mm.	• Joint for extension pipe • Screw-in method
Classification (EN779:2012)	G3	M6	–	–
Classification (ISO16890)	Coarse 35%	ePM10 70%	–	–

⚠ NOTICE

- Do not install indoor units in areas (e.g. mobile phone base stations) where the emission of VOCs such as phthalate compounds and formaldehyde is known to be high as this may result in a chemical reaction.
- Our air-conditioning equipments and heat pumps contain a fluorinated greenhouse gas, R410A (GWP: 2088) or R32 (GWP: 675). *These GWP values are based on Regulation (EU) No.517/2014 from IPCC 4th edition. In case of Regulation (EU) No.626/2011 from IPCC 3rd edition, these are as follows. R410A (GWP: 1975), R32 (GWP: 550)
- When installing or relocating or servicing our air-conditioning equipment, use only the specified refrigerant (R410A or R32) to charge the refrigerant lines.
  Do not mix it with any other refrigerant and do not allow air to remain in the lines.
  If air is mixed with the refrigerant, then it can be the cause of abnormal high pressure in the refrigerant lines, and may result in an explosion and other hazards.
  The use of any refrigerant other than that specified for the system will cause mechanical failure, system malfunction or unit breakdown. In the worst case, this could lead to a serious impediment to securing product safety.

MITSUBISHI ELECTRIC CORPORATION
HEAD OFFICE: TOKYO BUILDING, 2-7-3 MARUNOUCHI, CHIYODA-KU, TOKYO 100-8310, JAPAN
http://Global.MitsubishiElectric.com/

Air Conditioners Catalogue 2021
E-2105259(16891)

E-2105259

S-179-1-CA645-B SI2103 Printed in Japan (IP)

Revised publication effective Mar. 2021.
Superseding publication of S-179-1-CA645-A Jan. 2021.
Specifications are subject to change without notice.